Till 'N Seed®
Models BPSB-8, BPSBP-8, BPSBA-8, BPSBAP-8
Operator's Manual

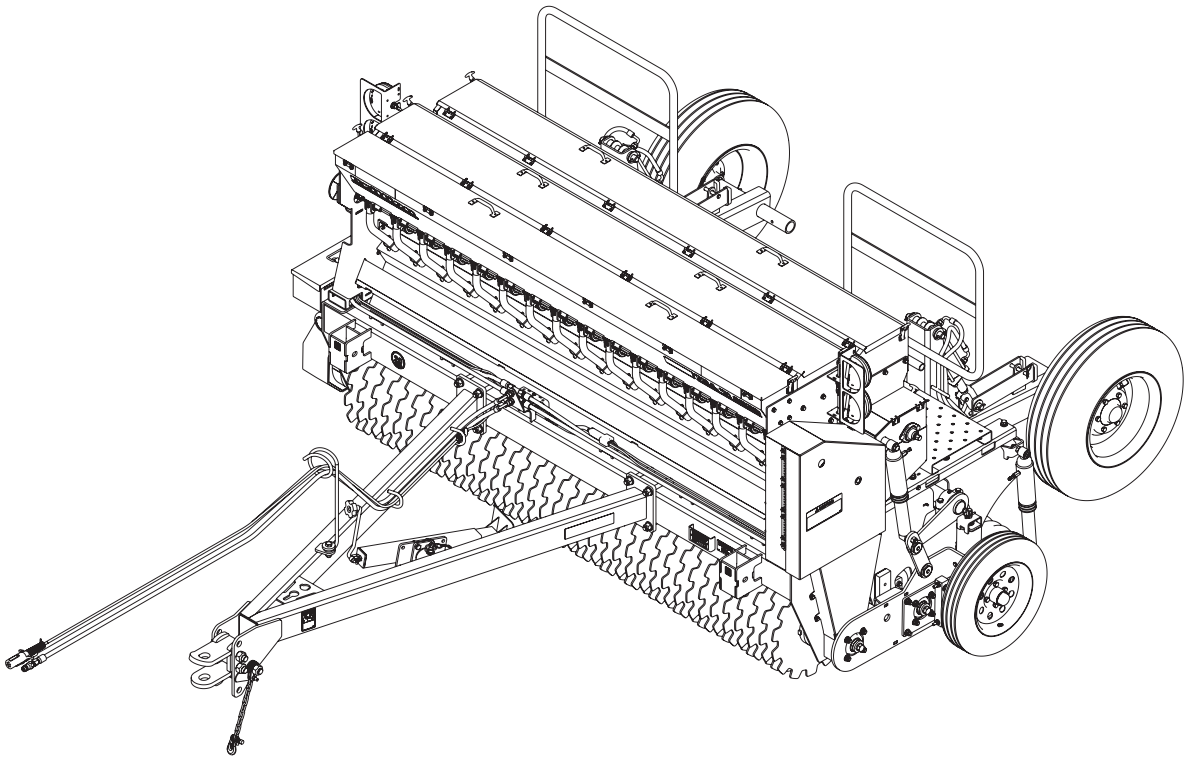

LANDOLL COMPANY, LLC
1900 North Street
Marysville, Kansas 66508
(785) 562-5381
800-428-5655 ~ WWW.LANDOLL.COM

F-1097-2305

Manuals for Till 'N Seed® - BPSB-8, BPSBP-8, BPSBA-8, BPSBAP-8

Manual Number	Manual Type
F-1097	Operator's Manual
F-1096	Parts Manual

DANGER

DO NOT operate or perform any maintenance tasks on this equipment until you have completed the following:

1. **Receive proper training to operate this equipment safely.**
2. **Read and understand the operator's manual.**
3. **Be thoroughly trained on inspection and repair procedures.**

Failure to comply with this warning may result in serious injury or possibly death.

Table of Contents

Chapter 1

Safety Information

Introduction

The implement described in this manual has been designed with care and built by skilled workers using quality materials and processes. Proper assembly and maintenance will provide you with satisfactory use for seasons to come.

DANGER

Read this entire manual before attempting to assemble, adjust or operate this implement. Failure to comply with this warning can result in personal injury or death, damage to the implement or its components and inferior operation.

Description of Unit

BPS8 Till 'N Seed Seeder features a 2.5-bushel capacity Micro-Meter Seed Metering System Seed Box for small seed varieties and a 6.3-bushel capacity Large Meter Seed Metering System Seed Box for large seed varieties or seeding seed varieties at a higher rate. A 6.3-bushel capacity Agitator Seed Box for bulky and chaffy seed varieties is optional. The ground drive system and self-cleaning rotor design creates enough tillage action to mix the seed into the soil without disturbing vegetation already in place. The Drive Rotor and pneumatic down pressure Tillage Rotor adapts to varying field conditions. A firming Rear Rubber Roller with pneumatic down pressure provides optimal seed to soil contact. Adjustable Gauge Wheels set Tillage Rotor Depth. The Seed Calibration Tray makes custom Seed Rate Calibration easy and is conveniently stored on the Seeder when not in use. Transmission disconnect pins disengage the seeding mechanism for calibration or if the unit is used only for tillage. The BPS8 Till 'N Seed Seeder is available in Pull-Type or 3-Point Hitch configurations. Optional equipment include Electronic Acre Meter, Third Seed Box, and Pull-Type Dual Wheel Kit.

Using this Manual

This manual will familiarize you with safety, assembly, operation, adjustment, and maintenance. Read this manual and follow the recommendations to help ensure safe and efficient operation.

- The information in this manual is current at time of printing. Some parts may have changed to assure top performance.
- Location reference: Right and Left designations in this manual are determined by facing the direction the implement will travel during field operation, unless otherwise stated.

Owner Assistance

If customer service or repairs are needed, contact your Brillion dealer. They have trained personnel, parts and service equipment specially designed for Brillion products. Your implement's parts should only be replaced with Brillion parts. If items covered in this manual are not understood, contact your local Brillion Dealer.

Warranty Registration

Brillion Farm Equipment, by Landoll, shall have no warranty obligation unless each product is registered within 10 days of retail purchase, using the Landoll Company, LLC Ag Products on-line registration process. Please refer to the Ag Products Policy and Procedures Manual, accessible at *www.landoll.com* for step by step instructions regarding product registration.

Enter your product information below for quick reference.

Refer to the ID Plate as shown in **Figure 1-1**.

MODEL NUMBER _____

SERIAL NUMBER _____

DATE OF PURCHASE _____

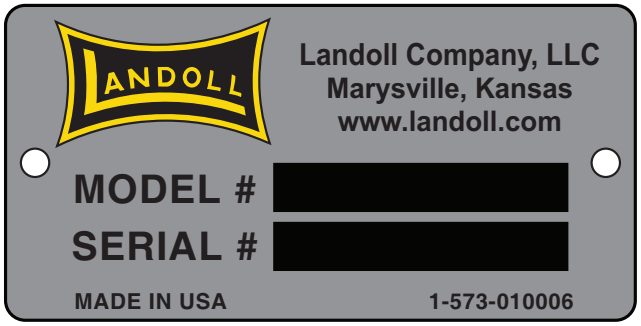

Figure 1-1: ID Plate

Safety

NOTE

Investigation has shown that nearly 1/3 of all farm accidents are caused by careless use of machinery. Insist that all people working with you or for you abide by all safety instructions.

Understanding Safety Statements

You will find various types of safety information on the following pages and on the implement decals (signs) attached to the implement. This section explains their meaning.

NOTICE

Special notice - read and thoroughly understand.

CAUTION

Proceed with caution. Failure to heed caution may cause injury to person or damage product.

WARNING

Proceed with caution. Failure to heed warning will cause injury to person or damage product.

DANGER

Proceed with extreme caution. Failure to heed notice will cause injury or death to person and/or damage product.

NOTE

You should read and understand the information contained in this manual and on this implement decals before you attempt to operate or maintain this equipment.

- Examine safety decals and be sure you have the correct safety decals for the implement. **See Figures 1-3 and 1-4.**
- Order replacement decals through your Brillion dealer.
- Keep these signs clean so they can be observed readily. It is important to keep these decals cleaned more frequently than the implement. Wash with soap and water or a cleaning solution as required.
- Replace decals that become damaged or lost. Also, be sure that any new implement components installed during repair include decals which are assigned to them by the manufacturer.
- When applying decals to the implement, be sure to clean the surface to remove any dirt or residue. Where possible, sign placement should protect the sign from abrasion, damage, or obstruction from mud, dirt, oil etc.

DANGER

- **Do not allow anyone to ride on the tractor or implement. Riders could be struck by foreign objects or thrown from the implement.**
- **Never allow children to operate equipment.**
- **Keep bystanders away from implement during operation.**

Transporting Safety

IMPORTANT

It is the responsibility of the owner/operator to comply with all state and local laws.

- When transporting the implement on a road or highway, use adequate warning symbols, reflectors, lights and slow moving vehicle sign as required. Slow moving tractors and towed implements can create a hazard when driven on public roads. They are difficult to see, especially at night.
- Do not tow an implement that, when fully loaded, weighs more than 1.5 times the weight of the towing vehicle.
- Carry reflectors or flags to mark the tractor and implement in case of breakdown on the road.
- Do not transport at speeds over 20 MPH under good conditions. Never travel at a speed which does not allow adequate control of steering and stopping. Reduce speed if towed load is not equipped with brakes.
- Avoid sudden stops or turns because the weight of the implement may cause the operator to lose control of the tractor. Use a tractor heavier than the implement.
- Use caution when towing behind articulated steering tractors; fast or sharp turns may cause the implement to shift sideways.
- Keep clear of overhead power lines and other obstructions when transporting. Know the transport height and width of your implement. **See "Specifications" in Chapter 5.**

Safety Instructions for Towing Vehicles

The maximum travel speed is the lesser of

- The limit of the road conditions;
- The maximum specified ground speed;
  - — for towing operations as indicated in this manual or SIS;
  - — of the towed vehicle as indicated in its operator's manual, SIS, or information sign;
- The maximum ground speed of the towed equipment combination shall be limited to the lowest specified ground speed of any of the towed machines. This speed is the ground speed limitation.

EXAMPLE: If the tractor is capable of 25 mph, the first implement has a SIS for 19 mph, and the last implement's operator's manual states its specified ground speed is 15 mph, the towed equipment combination ground speed limitation is 15 mph.

Attaching, Detaching and Storage

- Do not stand between the tractor and implement when attaching or detaching implement unless both are blocked from moving.
- Before applying pressure to the hydraulic system, be sure all connections are tight and that hydraulic hoses are not damaged.
- Completely raise machine and install transport locks. If desired to store lowered and on unpaved surface, place hardwood blocks under roller to keep off ground.
- Block implement so it will not roll when unhitched from the tractor.
- Relieve pressure in hydraulic lines before uncoupling hydraulic hoses from tractor.
- Use a Safety Chain to help control drawn machinery should it separate from the tractor drawbar.

NOTE

To relieve hydraulic pressure: Depending on tractor hydraulic system, some can be relieved by actuating control lever after engine is stopped. If tractor has electric over hydraulic controls, it may be necessary to move the control lever to the float position with engine running. ***Refer to Tractor's Operator's Manual.***

Wear protective gloves and safety glasses or goggles when working with hydraulic systems.

Maintenance Safety

- Block the implement so it will not roll when working on or under it to prevent injury.
- Do not make adjustments or lubricate the machine while it is in motion.
- Make sure all moving parts have stopped.
- Keep all guards in place. Replace any that become damaged.
- Understand the procedure before doing the work. Use proper tools and equipment.

Air Shock Safety

- Wear protective gloves and safety glasses or goggles when working with the Air Shock.
- The pressurized Air Shock may violently extend if disconnected from the machine. Release air pressure prior to removing.

Protective Equipment

- Wear protective clothing & equipment appropriate for the job. Avoid loose fitting clothing.
- Because prolonged exposure to loud noise can cause hearing impairment or hearing loss, wear suitable hearing protection, such as earmuffs or earplugs.

Prepare for Emergencies

- Keep a First Aid Kit and Fire Extinguisher handy.
- Keep emergency numbers for the doctor, ambulance, hospital and fire department near the phone.

Tire Safety

Tire changing can be dangerous and should be performed by trained personnel using correct tools and equipment.

- When inflating tires, use a clip-on chuck and extension hose long enough to allow you to stand to one side, not in front of or over the tire assembly. Use a safety cage if available.
- When removing and installing wheels use wheel-handling equipment adequate for the weight involved.

Chemical Safety

Agricultural chemicals can be dangerous. Improper use can seriously injure persons, animals, plants, soil & property.

- Read chemical manufactures instructions and store or dispose of unused chemicals as specified. Handle chemicals with care & avoid inhaling smoke from any type of chemical fire.
- Store or dispose of unused chemicals as specified by the chemical manufacturer.

High Pressure Fluid Safety

Escaping fluid under pressure can be nearly invisible and have enough force to penetrate the skin causing serious injury. Use a piece of cardboard, rather than hands, to search for suspected leaks.

- Any fluid injected into the skin must be surgically removed within a few hours or gangrene may result.
- Avoid the hazard by relieving pressure before disconnecting hydraulic lines.

NOTE

To relieve hydraulic pressure: Depending on tractor hydraulic system, some can be relieved by actuating control lever after engine is stopped. If tractor has electric over hydraulic controls, it may be necessary to move the control lever to the float position with engine running. ***Refer to Tractor Operator's Manual.***

Wear protective gloves and safety glasses or goggles when working with hydraulic systems.

Safety Chain

1. Use the Safety Chain to help control drawn machinery should it separate from the tractor drawbar.
2. Use a chain with a strength rating equal to or greater than the gross weight of towed machinery, in accordance with ASAE S338.2 specifications. If two or more machines are pulled in tandem, a larger chain may be required. Chain capacity must be greater than the total weight of all towed implements.

   A second chain should be used between each implement.
3. Attach the chain to the tractor drawbar support or specified anchor location. Never attach the chain to an intermediate support. Allow only enough slack in the chain to permit turning. The distance from Hitch Pin to attachment point or intermediate support point should not exceed 9 inches. **See Figure 1-2.** If the distance from the Drawbar Pin to either the front or rear chain attachment point exceeds 9 inches, intermediate chain support is required. **Refer to Tractor Operator's Manual**
4. Replace chain if any links or end fittings are broken, stretched or damaged.
5. Do not use a Safety Chain for towing.

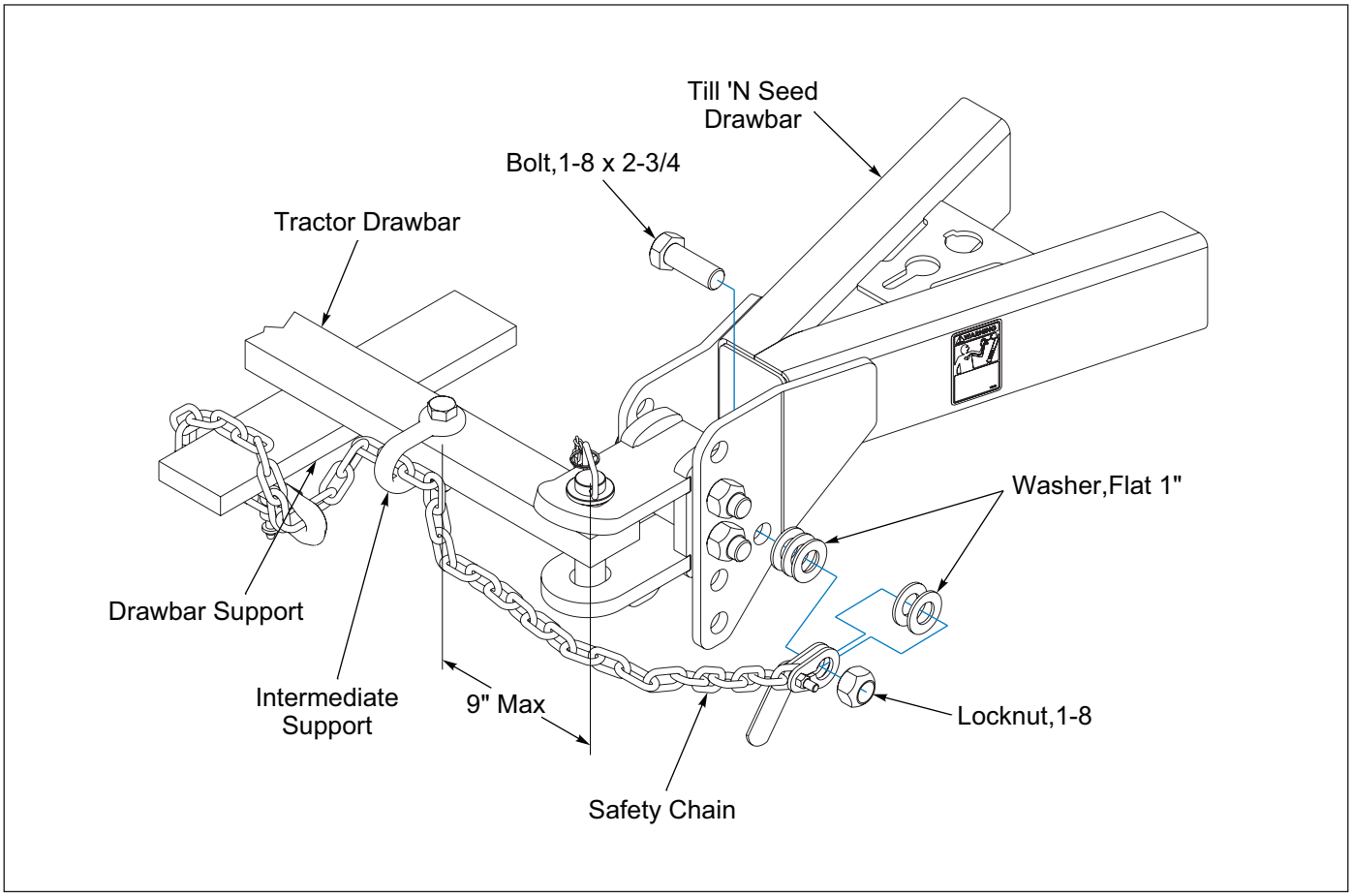

Figure 1-2: Safety Chain

Decals

ITEM 1 - 193500

ITEM 2 - 3P157

ITEM 3 - 528934

ITEM 4 - 528933

ITEM 5 - 528938

NOTICE

ACRE METER, DO NOT PRESSURE CLEAN WITH AIR OR WATER

9K740

ITEM 6 - 9K740

WARNING

MOVING PART HAZARD

TO PREVENT SERIOUS INJURY FROM MOVING PARTS:

- KEEP COVERS CLOSED DURING OPERATION.
- DO NOT ALLOW ANYONE TO RIDE OR CLIMB MACHINE DURING OPERATION.
- KEEP OBSERVERS AWAY.

2K123

ITEM 7 - 2K123

MICRO-METER CALIBRATION

MACHINE MAY BE CALIBRATED FOR UNLISTED SEED AS FOLLOWS:

1. SEED SHAFT TURNS 258 REVOLUTIONS PER ACRE SEEDED.
2. RAISE MACHINE AND LOCK IN TRANSPORT POSITION.
3. PLACE CALIBRATION TRAY IN COLLECTION POSITION TO CATCH SEED.
4. REMOVE MICRO-METER DRIVE PIN.
5. TURN TRANSMISSION MICRO-METER SHAFT CALIBRATION HEX 258 REVOLUTIONS CLOCKWISE(CW) WITH PROVIDED CRANK. 43 TURNS MAY BE USED IF RESULTS ARE ADJUSTED AS INDICATED IN STEP 6.
6. WEIGH SEED FOR APPROXIMATE PLANTING RATE IN LBS/ACRE. MULTIPLY WEIGHT BY 6 IF ONLY 43 TURNS WERE USED.
7. INSTALL MICRO-METER DRIVE PIN.
8. PLACE CALIBRATION TRAY BACK IN STORAGE POSTION.

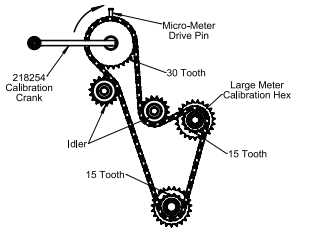

242490

PLANTING RATES FOR BPS8 MICRO-METER BOX IN POUNDS PER ACRE

RATES ARE INTENDED AS A GUIDE ONLY. VARIATIONS IN SIZE AND CLEANLINESS WILL AFFECT RATES. CHECK ACREAGE AND POUNDS OF SEED USED FOR BEST RESULTS.

INDICATOR SETTINGS	1A	2A	3A	4A	5A	6A	7A	8A
ALFALFA	4	7	14	20	24	30	35	41
ALFALFA (COATED)	4	9	14	19	26	32	37	43
BIRDSFOOT TREFOIL	4	9	15	21	28	35	42	48
CANARY REED	1	4	6	8	10	13	15	21
CENTIPEDE	4	8	13	19	25	31	36	42
CLOVER ALSIKE	4	8	13	18	23	28	34	39
CLOVER DIXIE CRIMSON (UNCOATED)	4	10	17	24	31	38	45	53
CLOVER MEDIUM RED	4	9	14	18	23	28	32	36
CLOVER SEMINOLE LADINO	3	8	14	20	25	31	36	42
FESCUE STF43 SOFT LEAF TALL	0	2	4	7	10	11	14	16
FESTOLIUM	1	3	6	10	13	16	20	22
LETTUCE	3	59	88	124	Settings Not Recommended			
MILLET	3	7	12	18	22	29	35	39
RAPE	4	8	14	21	25	29	33	39
RYEGRASS ANNUAL	0	2	4	7	9	12	13	16
RYEGRASS ITALIAN	1	4	7	11	14	18	22	25
SORGHUM SUDAN	0	9	17	24	31	38	45	51
SUGAR BEETS	0	9	16	22	28	33	40	42
SWITCHGRASS (CLEANED AND HULLED)	0	14	23	33	42	55	66	80
TEFF TIFFANY (COATED)	4	10	14	21	28	32	39	45
TEFF TIFFANY (UNCOATED)	4	8	12	18	24	30	37	44
TILLAGE RADISH	*	9	14	20	25	31	36	42
TIMOTHY CLIMAX	3	7	12	19	25	31	37	41
TURNIPS	3	9	15	21	27	33	39	45

Note: * Some cracked seeds were observed at this setting

ITEM 10 - 24290

LARGE METER CALIBRATION

MACHINE MAY BE CALIBRATED FOR UNLISTED SEED AS FOLLOWS:

1. SEED SHAFT TURNS 337 REVOLUTIONS PER ACRE SEEDED IN LOW RANGE. SEED SHAFT TURNS 517 REVOLUTIONS PER ACRE SEEDED IN HIGH RANGE.
2. RAISE MACHINE AND LOCK IN TRANSPORT POSITION.
3. PLACE CALIBRATION TRAY IN COLLECTION POSITION TO CATCH SEED.
4. REMOVE LARGE METER DRIVE PIN.
5. TURN TRANSMISSION LARGE METER SHAFT CALIBRATION HEX 337 REVOLUTIONS CLOCKWISE(CW) FOR LOW RANGE OR 517 REVOLUTIONS CLOCKWISE(CW) FOR HIGH RANGE WITH PROVIDED CRANK. 66 LOW RANGE OR 86 HIGH RANGE TURNS MAY BE USED IF RESULTS ARE ADJUSTED AS INDICATED IN STEP 6.
6. WEIGH SEED FOR APPROXIMATE PLANTING RATE IN LBS/ACRE. MULTIPLY WEIGHT BY 6 IF ONLY 36 LOW RANGE OR 86 HIGH RANGE TURNS WERE USED.
7. INSTALL LARGE METER DRIVE PIN.
8. PLACE CALIBRATION TRAY BACK IN STORAGE POSITION.

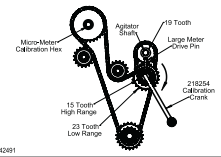

242491

PLANTING RATES FOR BPS8 LARGE METER BOX IN POUNDS PER ACRE

RATES ARE INTENDED AS A GUIDE ONLY. VARIATIONS IN SIZE AND CLEANLINESS WILL AFFECT RATES. CHECK ACREAGE AND POUNDS OF SEED USED FOR BEST RESULTS.

INDICATOR SETTINGS	NOTES	RANGE	1A	2A	3A	4A	5A	6A	7A	8A
BARLEY	(1)	LOW	*	31	76	113	151	197	234	282
		HIGH	*	48	107	174	232	303	359	432
BERMUDA GRASS		LOW	13	31	51	80	118	154	194	225
		HIGH	21	48	79	122	180	238	298	345
BERMUDA GRASS (UNHULLED & COATED)		LOW	13	20	47	72	100	151	185	228
		HIGH	21	43	72	111	163	232	283	349
BLUEGRASS, KENTUCKY		LOW	6	16	27	47	73	88	118	142
		HIGH	9	24	41	72	113	142	180	218
BUCKWHEAT	(1)	LOW	*	33	68	106	148	188	222	278
		HIGH	*	51	104	161	222	285	341	422
CHICORY, FORAGE (COATED)		LOW	6	31	55	89	129	163	210	247
		HIGH	9	48	85	136	199	250	323	378
CORN (BIN RUN)	(1)	LOW	*	*	66	126	171	216	249	304
		HIGH	*	*	101	194	263	332	382	467
FESCUE, TALL		LOW	10	18	38	65	102	124	153	186
		HIGH	15	28	58	99	156	191	234	285
OATS	(1)	LOW	*	23	51	89	125	159	191	222
		HIGH	*	35	78	136	192	244	293	340
RYE GRAIN		LOW	6	35	76	120	164	197	251	297
		HIGH	10	53	117	184	252	303	385	455
RYEGRASS, ANNUAL		LOW	6	17	35	56	76	104	127	147
		HIGH	9	26	53	85	117	160	195	225
RYEGRASS, ITALIAN		LOW	5	25	50	81	113	151	181	213
		HIGH	8	38	76	124	174	232	277	327
RYEGRASS, PERENNIAL		LOW	6	23	47	76	111	144	175	208
		HIGH	10	36	71	117	170	221	269	318

INDICATOR SETTINGS	NOTES	RANGE	1A	2A	3A	4A	5A	6A	7A	8A
SORGHUM SUDAN		LOW	0	48	92	139	189	237	283	326
		HIGH	0	73	141	214	290	363	434	499
SOYBEANS	(1)	LOW	0	37	91	139	181	224	268	307
		HIGH	0	57	149	213	277	343	412	472
SUNFLOWER, PERIDOVIK		LOW	0	0	35	57	82	103	120	154
		HIGH	0	0	54	88	125	158	191	236
WINTER WHEAT	(1)	LOW	*	34	81	127	176	218	262	321
		HIGH	*	52	125	195	268	335	401	492

Notes:
(1) Low germination may occur due to shallow seeding depth for this seed
* Indicates intermittent flow or some cracked seeds were observed at this setting

ITEM 11 - 24291

ITEM 8
4000335

ITEM 13
144193

ITEM 9
224589

ITEM 14
3P078

AGITATOR CALIBRATION

MACHINE MAY BE CALIBRATED FOR UNLISTED SEED AS FOLLOWS:

1. AGITATOR SHAFT TURNS 456 REVOLUTIONS PER ACRE SEEDED.
2. RAISE MACHINE AND LOCK IN TRANSPORT POSITION.
3. PLACE CALIBRATION TRAY IN COLLECTION POSITION TO CATCH SEED FROM AGITATOR BOX.
4. REMOVE AGITATOR DRIVE PIN.
5. TURN TRANSMISSION AGITATOR SHAFT CALIBRATION HEX 456 REVOLUTIONS CLOCKWISE(CW) WITH PROVIDED CRANK. 76 TURNS MAY BE USED IF RESULTS ARE ADJUSTED AS INDICATED IN STEP 6.
6. WEIGH SEED FOR APPROXIMATE PLANTING RATE IN LBS/ACRE. MULTIPLY WEIGHT BY 6 IF ONLY 76 TURNS WERE USED.
7. INSTALL AGITATOR DRIVE PIN.
8. PLACE CALIBRATION TRAY BACK IN STROAGE POSITION.

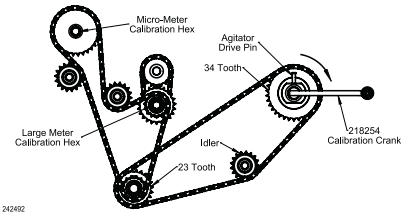

242492

PLANTING RATES FOR BPS8 AGITATOR BOX IN POUNDS PER ACRE

RATES ARE INTENDED AS A GUIDE ONLY. VARIATIONS IN SIZE AND CLEANLINESS WILL AFFECT RATES. CHECK ACREAGE AND POUNDS OF SEED USED FOR BEST RESULTS.

INDICATOR SETTINGS	AGITATOR	1	2	3	4	5	6
BENTGRASS, L-93 CREEPING	BLADE	27	84	166	248	339	461
BLUEGRASS, SHERMAN BIG	BLADE	4	22	57	92	146	198
BLUEGRASS, KENTUCKY - ODYSSEY	BLADE	14	60	114	172	257	364
BLUESTEM, PAWNEE BIG (W/BEARDS)	BLADE	1	3	5	8	12	18
BLUESTEM, WW B. DAHL (W/O BEARDS)	BLADE	1	5	13	26	44	69
BLUESTEM, ITASCA LITTLE (W/O BEARDS)	BLADE	*	1	2	4	7	12
BROME, MEADOW	BLADE	1	5	8	13	22	36
BROME, SMOOTH	BLADE	2	6	13	22	38	63
BUFFALO GRASS	BLADE	3	16	49	83	124	167
BUFFEL GRASS	BLADE	0	1	1	3	4	5
FESCUE, CREEPING RED	BLADE	3	10	25	50	97	148
FESCUE, TALL	BLADE	9	40	86	161	233	319
FESTOLIUM	BLADE	12	33	77	113	211	286
GRAMA, SIDE OATS	BLADE	1	3	7	12	19	29
INDIAN GRASS	BLADE	1	3	5	8	10	14
ORCHARD GRASS (UNHULLED)	BLADE	3	12	29	57	99	159
RYEGRASS	BLADE	20	55	110	169	257	347
RYEGRASS, ITALIAN	BLADE	17	48	130	185	315	404
WHEATGRASS, INTERMEDIATE	BLADE	3	10	23	39	68	101

Note: * Some cracked seeds were observed at this setting

ITEM 12 - 24292

Figure 1-3: Decals (1 of 2)

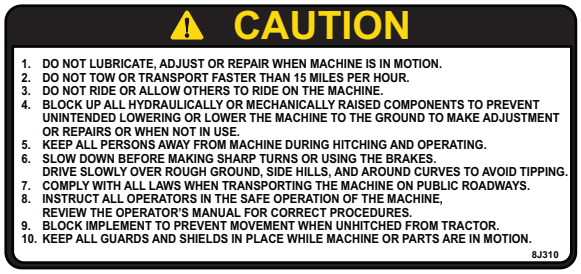

ITEM 15
8J310

ITEM 18
232190

ITEM 19
181166

ITEM 16
218264

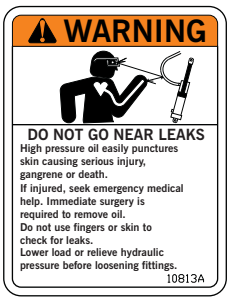

ITEM 17
3K706

ITEM 20
2-573-010198

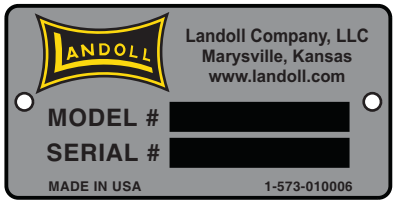

ITEM 21
1-573-01006

Figure 1-4: Decals (2 of 2)

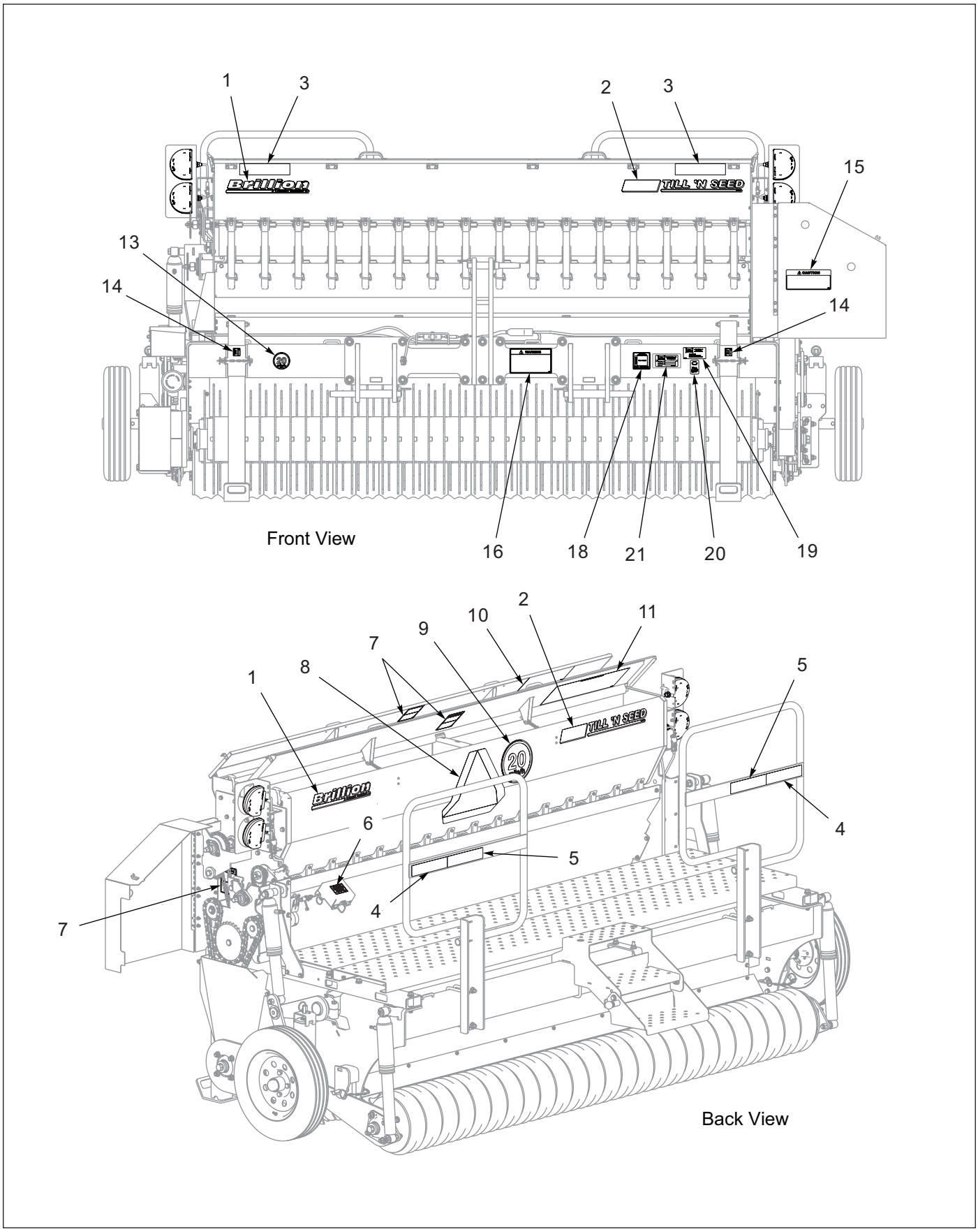

Figure 1-5: Seeder Decals

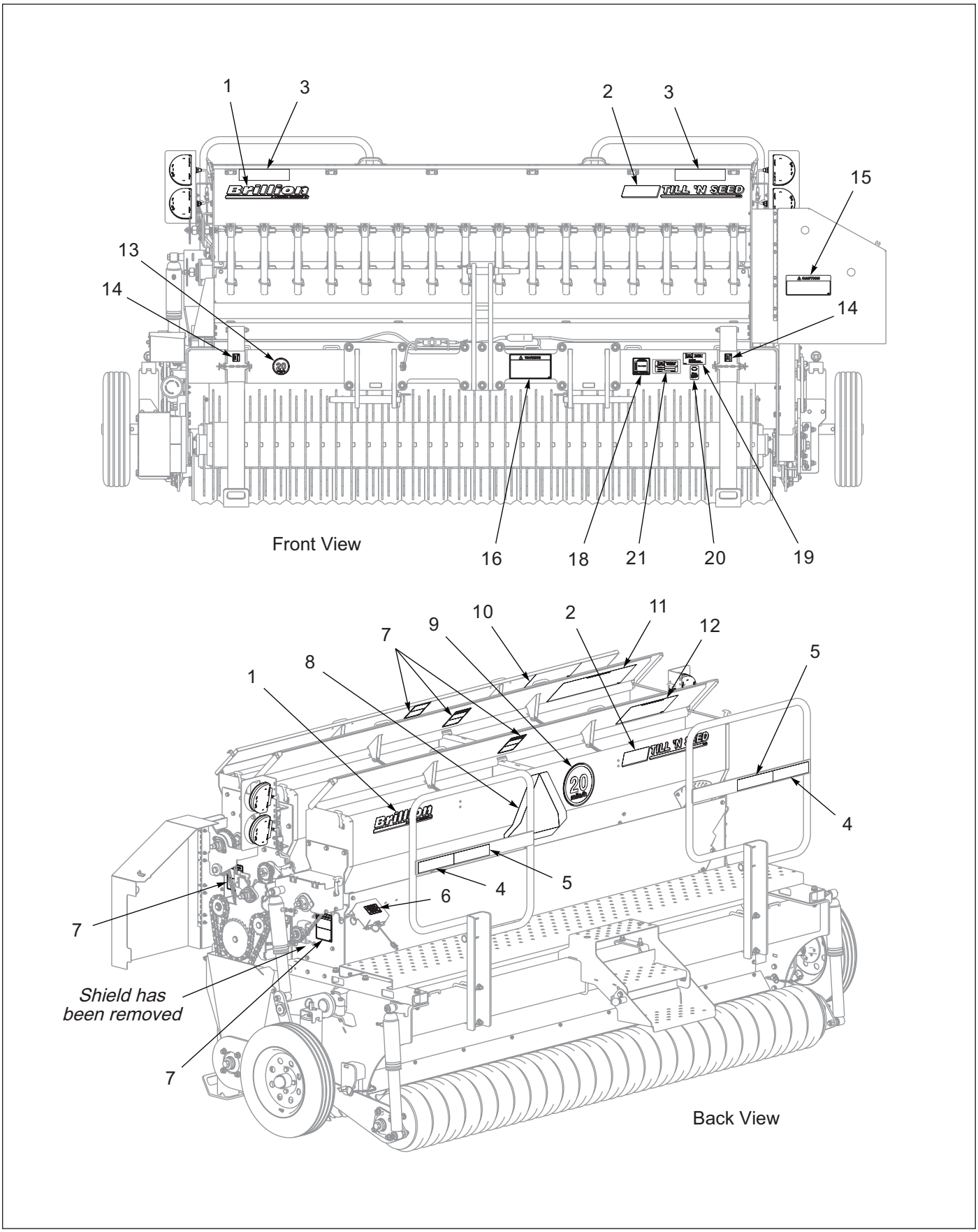

Figure 1-6: 3-PT Seeder with Agitator Box Decals

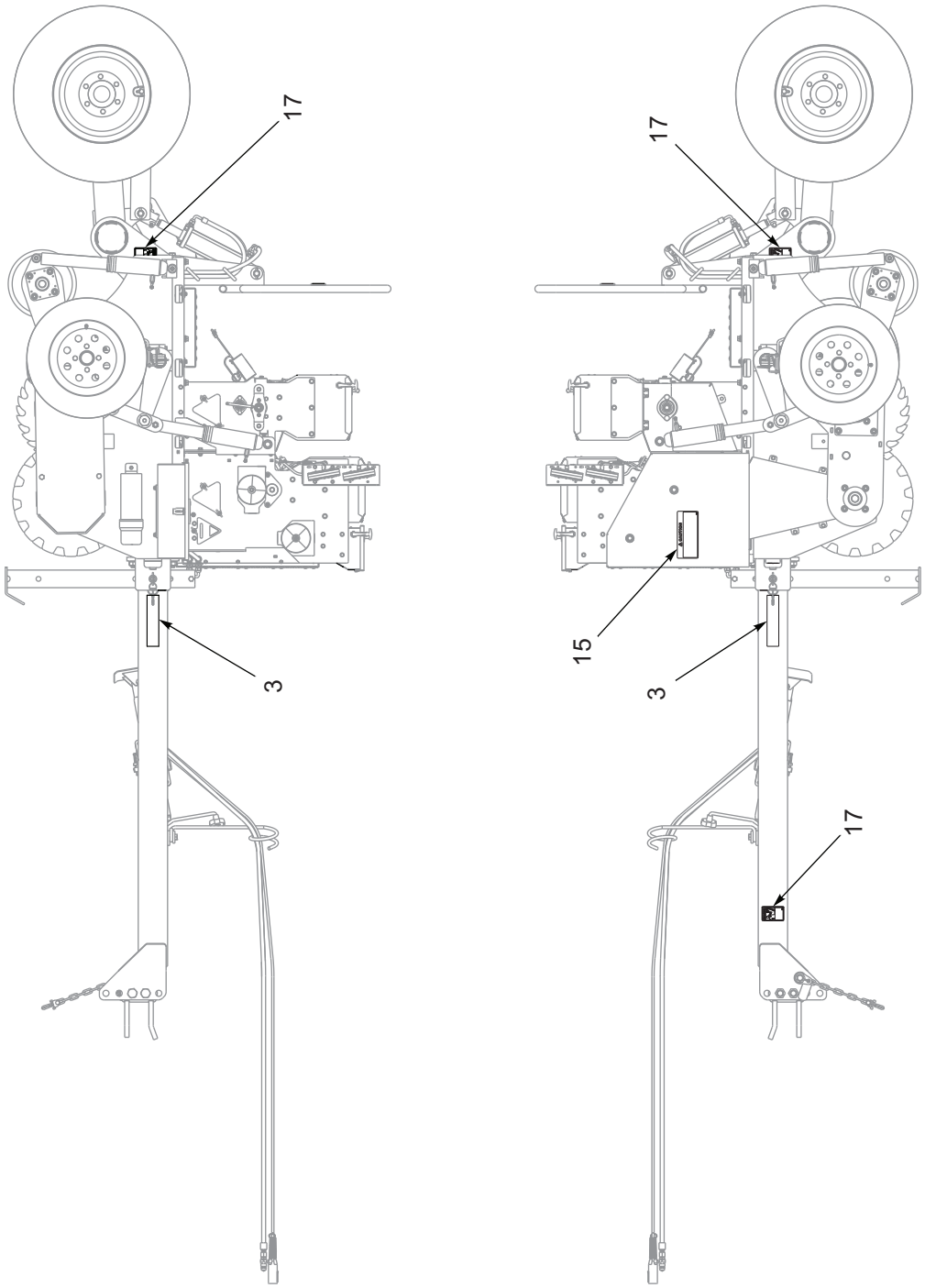

Figure 1-7: Drawbar Seeder Decals

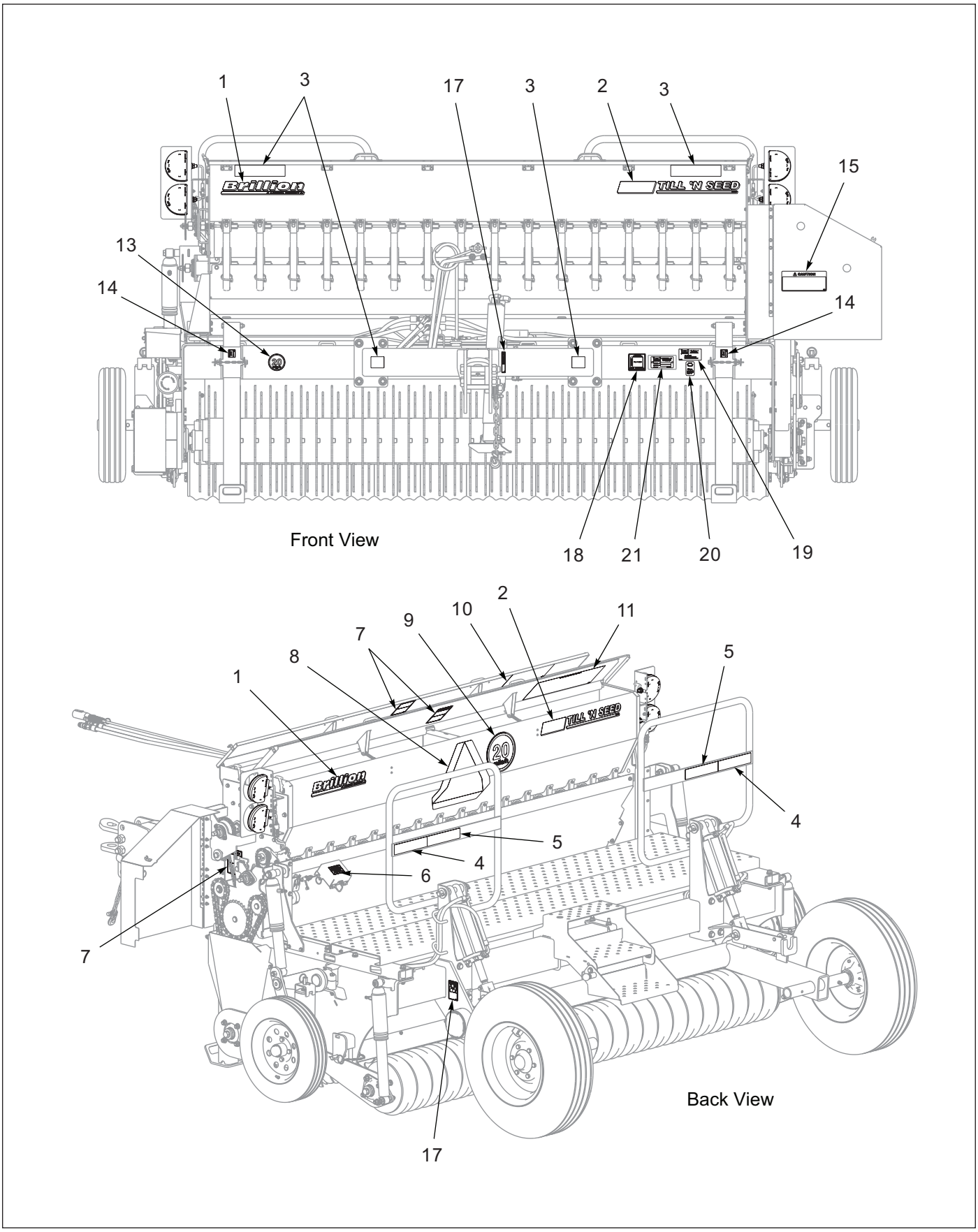

Figure 1-8: Drawbar Seeder Decals

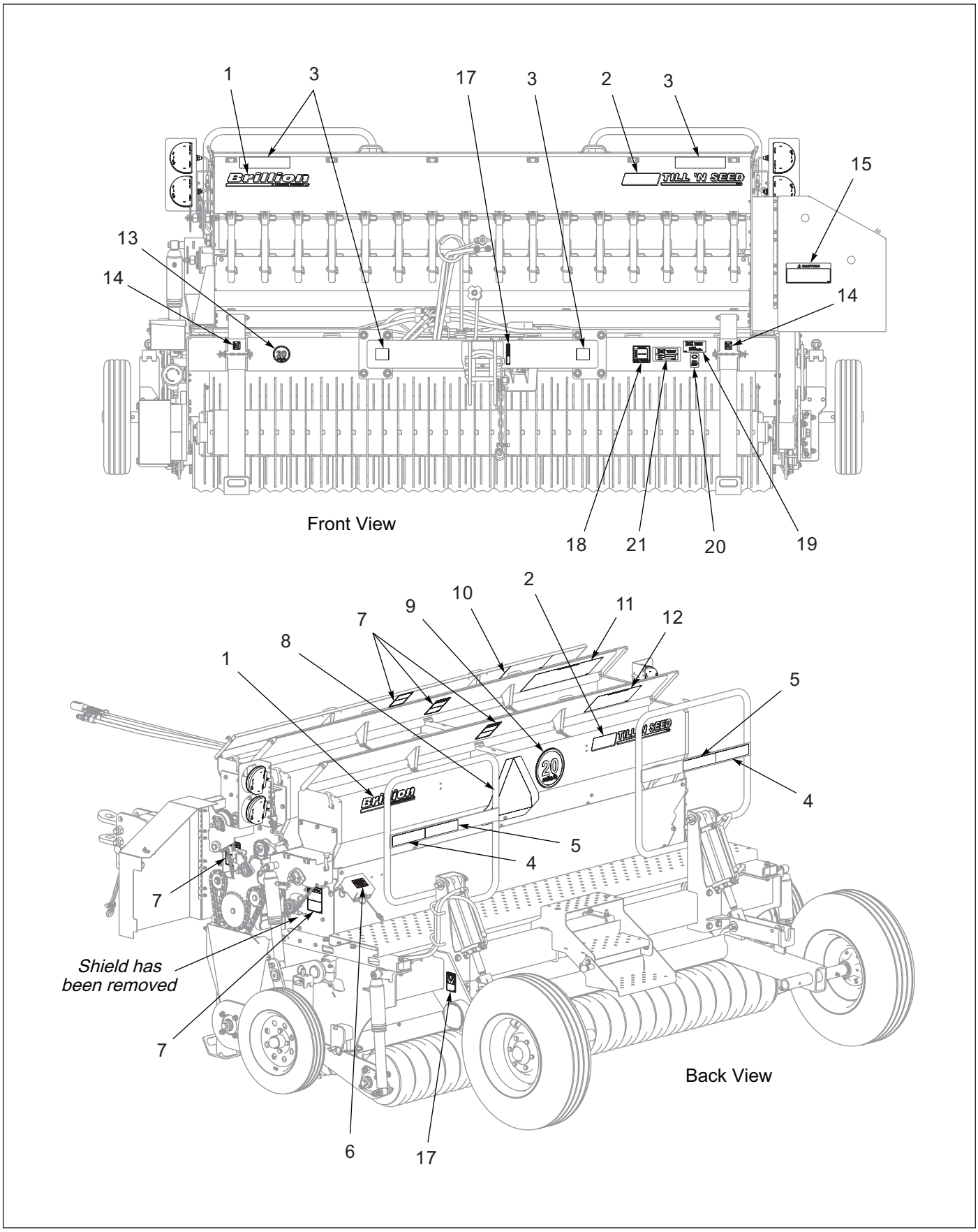

Figure 1-9: Drawbar Seeder with Agitator Box Decals

Table provided for general use.

NOTES:

Chapter 2

Assembly

CAUTION

Do not work on or under this machine unless securely blocked and supported by a hoist or tractor or by other sufficient means.

WARNING

Do not attempt to lift heavy parts manually. Use a hoist or a fork lift to move these parts into position.

NOTE

Refer to the repair parts manual F-1096 for identification of parts and for the approximate relationship of the parts in assembly. Your exact Seeder Model may vary slightly from the illustration.

To ensure alignment of assemblies, leave the nuts loose until completion of final assembly. Use lock washers or flat washers as specified. Spread all cotter pins.

After completion of final assembly, tighten all nuts evenly to prevent misalignment, distortion or binding. Tighten all screws and nuts to the recommended torques.

IMPORTANT

- If pre-assembled parts or fasteners are temporarily removed, remember where they go. It is best to keep parts separated.
- Check that all working parts move freely, bolts are tight and cotter pins spread.
- Refer to the Torque Table for proper torque valves. Note the different torque requirements for bolts with lock nuts. **See "General Torque Specifications" on page 4-1.**

"Left" and "Right" refer to directions seen as if standing behind the machine and facing in the direction of forward travel.

IMPORTANT

All harnesses must be firmly attached to machine frame members so they don't sag or become torn loose by field debris. Use the tie wraps provided.

Check to be sure the harnesses at center of machine is slack enough so as not to be stretched or interfered with while lowering frame from transport to field working position and vice versa.

3-PT Hitch

The 3-PT Model Till 'N Seed comes shipped completely assembled.

1. Untie the 7-Pin Harness from the Till 'N Seed Frame Tube. **See Figure 2-1.**
2. Connect 7-Pin Plug into Tractor and check Warning Lamp functions.
3. Bundle and secure harnesses with tie wraps.

IMPORTANT

Cords are marked Yellow Tape for Left and Green Tape for Right.

IMPORTANT

All harnesses must be firmly attached to machine frame members, so they don't sag or become torn loose by field debris. Use the tie wraps provided.

Check to be sure the harnesses at center of machine is slack enough so as not to be stretched or interfered with while lowering from transport to field working position and vice versa.

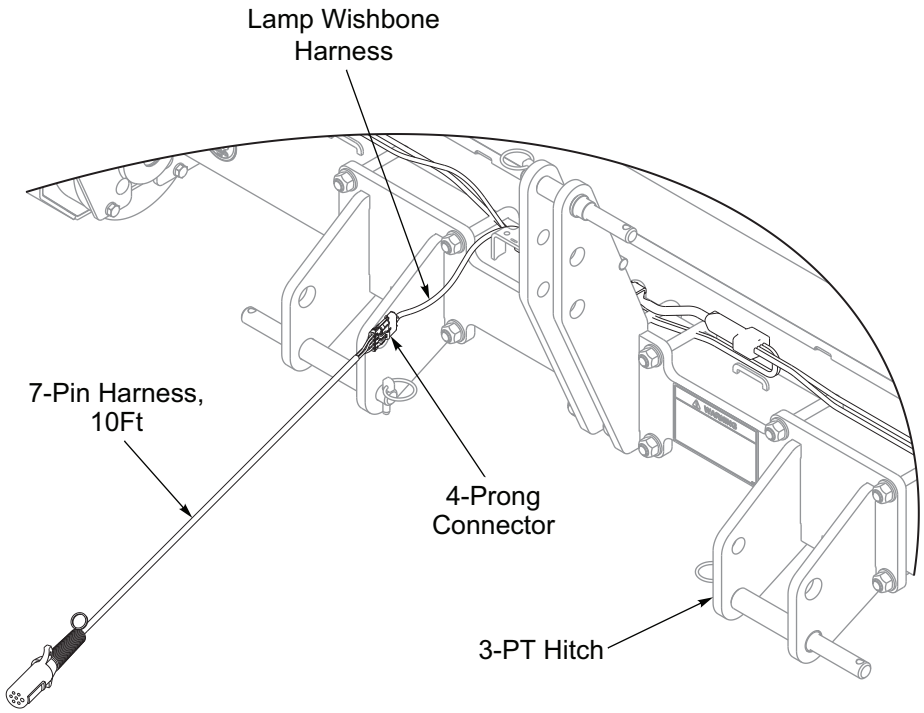

Figure 2-1: 3-PT Hitch Installation

Drawbar Installation

WARNING

Do not attempt to lift heavy parts manually. Use a hoist or a fork lift to move these parts into position.

When shipped, the Till 'N Seed comes assembled except for the Drawbar, Lift Rockshaft Assembly, and Tire and Wheel Assemblies

1. Untie the two rolled up Drawbar Hydraulic Hoses near the center of the Frame Tube. Ensure the hoses are not interfering with where the Drawbar is to be attached.
2. Center Drawbar on the front Frame Tube. Attach Drawbar to Frame Tube with 3/4-10 U-Bolts, Flat Washers and Locknuts. **See Figure 2-2.**
3. Attach the Hose Support to the Drawbar with 5/8-11 x 2-1/4 Bolt, Thick Washer and Flanged Locknut.
4. Lower Drawbar Jack.

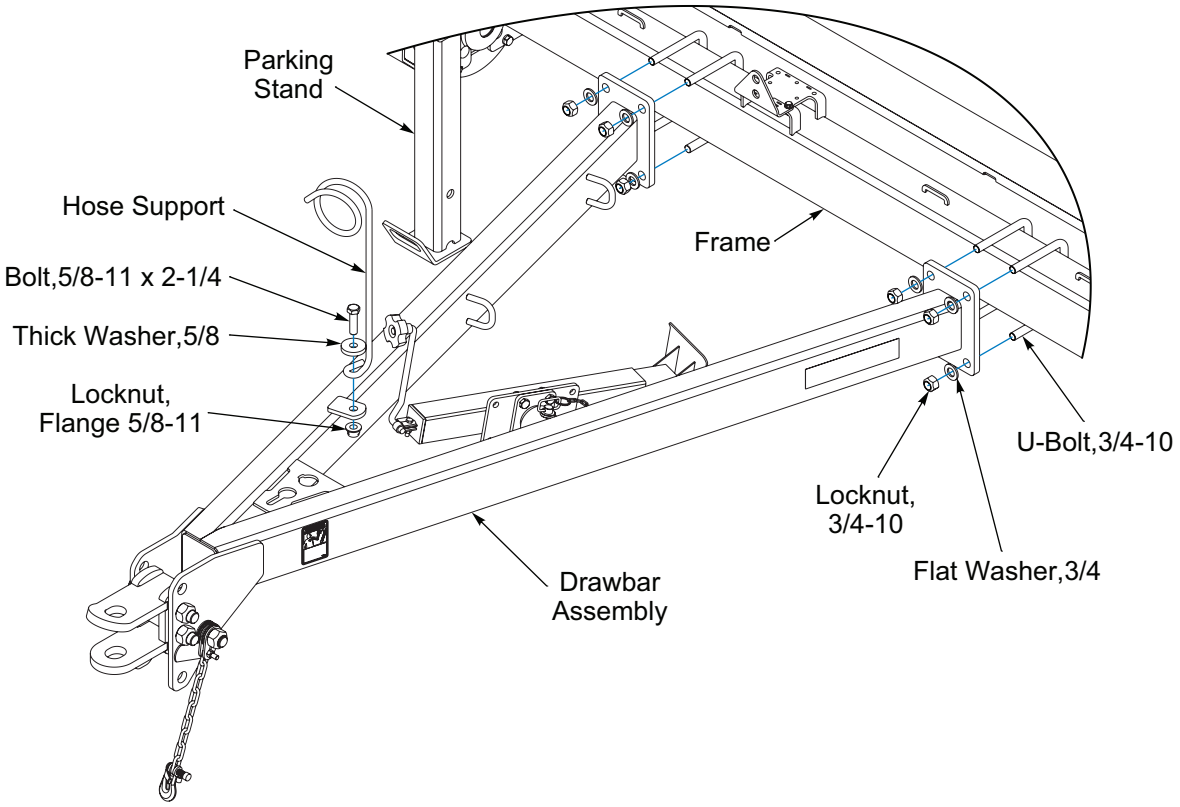

Figure 2-2: Drawbar Installation

Rockshaft Installation

1. Loosen RH and LH Lift Mount Hardware so that they can be slid onto each end of the Lift Rockshaft Assembly. **See Figure 2-3.**
2. Center the Lift Rockshaft Assembly on the back of the Till 'N Seed Frame between the RH and LH Lift Mounts.
3. Place a Nylon-Thrust Ring and a UHMW Bearing on each end of the Lift Rockshaft 4-1/2" Tube. *Nylon Thrust Ring must be against the Lift Rockshaft Assembly Thrust Ring.*
4. Align the Lift Rockshaft Tube with the RH and LH Lift Mounts. Slide the Lift Mounts over the UHMW Bearing on the Lift Rockshaft up to the Nylon Thrust Ring.
5. Tighten RH and LH Lift Mount Hardware.
6. Install a 3 x 8 Hydraulic Cylinder Rod end along with a Transport Lock onto each Lift Rockshaft Lug. Place a 1" Flat Washer on each side of the Lift Rockshaft Lug and position it between the Cylinder Clevis. Orient the Transport Lock so that Transport Lock opening can swing over the Cylinder Rod when pinned. Position the Transport Lock Slots over the Cylinder Clevis. Align and install 1 x 5-1/16 Pin. Place a 1" Flat Washer on each end of the Pin and secure with 5/16 x 2 Roll Pins.
7. Flip Transport Lock back to rest on the Wheel Arm Tab. Secure with 1/2 x 4 Clevis Pin and Hair Pin Cotter. Transport Lock is in the stored position.

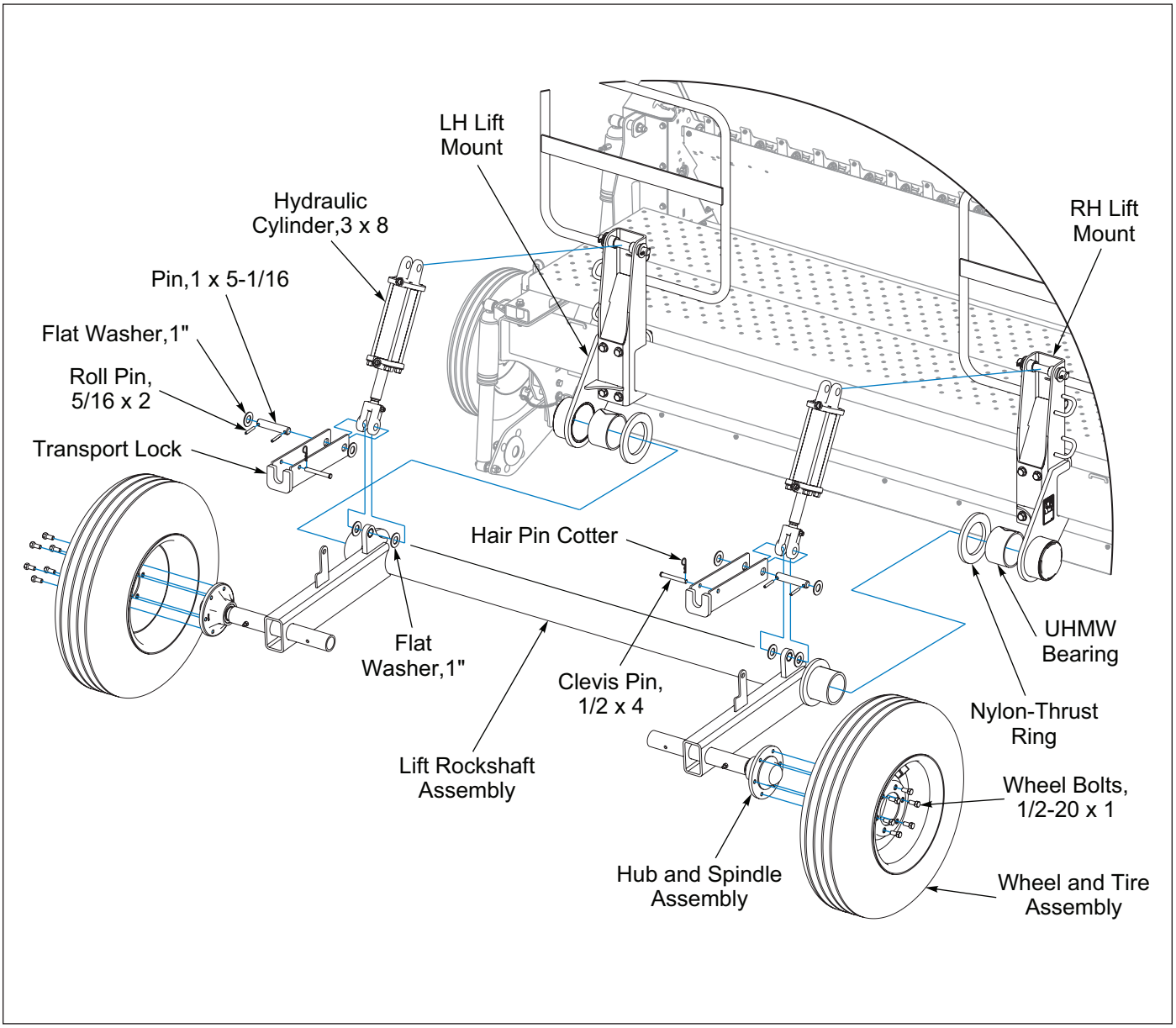

Figure 2-3: Rockshaft Installation

Tire and Wheel Installation

WARNING

Use a torque wrench to assure proper torque. Insufficient torque can cause stud breakage and damage the wheel pilots. Over torque can stress the bolts and strip the threads.

NOTE

The tire/wheel assembly is mounted with the valve stem facing outward from Hub and Spindle.

IMPORTANT

Torque will drop after the first 10 hours of operation. Check the Wheel Bolts for proper torque after this interval and re-tighten them.

- The Seeder uses 9.5L-15, 8 Ply Rating Tires and should be inflated to 44 PSI.
- Install a Tire and Wheel Assembly onto each Hub with 1/2-20 x 1 Wheel Bolts. Tighten Wheel Bolts to 50 Ft-Lbs. using the sequence in **Figure 2-4.** Then tighten to a full torque of 80-85 Ft-Lbs.

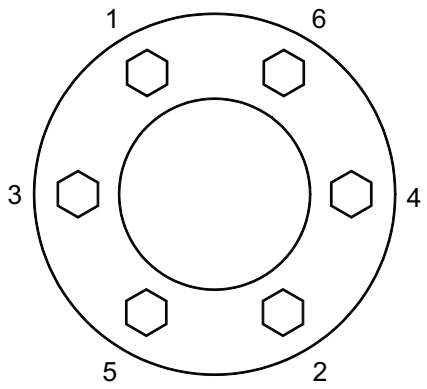

6 BOLT

Figure 2-4: Tightening Sequence for 6-Bolt

Hydraulic Installation

WARNING

Escaping hydraulic fluid can cause serious personnel injury. Relieve system pressure before repairing, adjusting, or disconnecting. Wear proper hand and eye protection when searching for leaks. Use cardboard instead of hands (See Figure 2-5.) Keep all components (cylinders, hoses, fittings, etc.) in good repair.

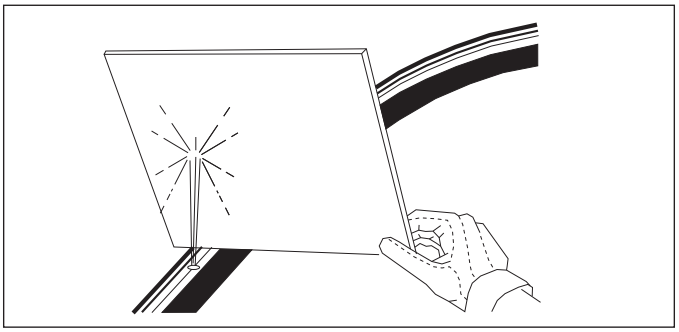

Figure 2-5: Leak Detection

Tightening Procedure for JIC 37 degree Swivel Female Nuts.

1. Check Fitting Flare and seat for defects.
2. Lubricate the connection.
3. Install Hydraulic Hoses without twists.
4. Hand Tighten until connections bottoms.
5. Using 2 wrenches to prevent twisting, rotate the Swivel Nut 2 wrench flats (1/3 turn).
6. For reassembly, follow the same procedure but tighten only 1 wrench flat (1/16 turn).

Tightening Procedure for Swivel O-Ring Fittings.

1. Lubricate O-Ring and install the Fitting until the Metal Washer which backs up the O-Ring contacts the face of the boss.
2. Orient the Fitting by turning counterclockwise up to 1 turn.
3. Tighten the Locknut using 50-60 Ft-Lbs of torque. **See "Hydraulic Fitting Torque Specifications" on page 4-2.**

Hydraulic Lift Circuit

1. Lower Drawbar Jack.
2. Unbundle Hydraulic Hoses near the center of the Frame Tube if not already untied. Route the hoses through the Drawbar Hose Loops and Hose Support towards the Hitch. **See Figure 2-6.**
3. Raise the Till 'N Seed with the Drawbar Jack enough to raise or remove the Shipping Parking Stands
4. Attach the Till 'N Seed to the tractor. **See "Tractor Preparation for Attaching Pull Type Till 'N Seed" on page 3-4.** Raise the Jack and rotate it to storage position.

NOTE

The Hydraulic Hoses when not in use can be stored in the key slot cutout on top of the Drawbar.

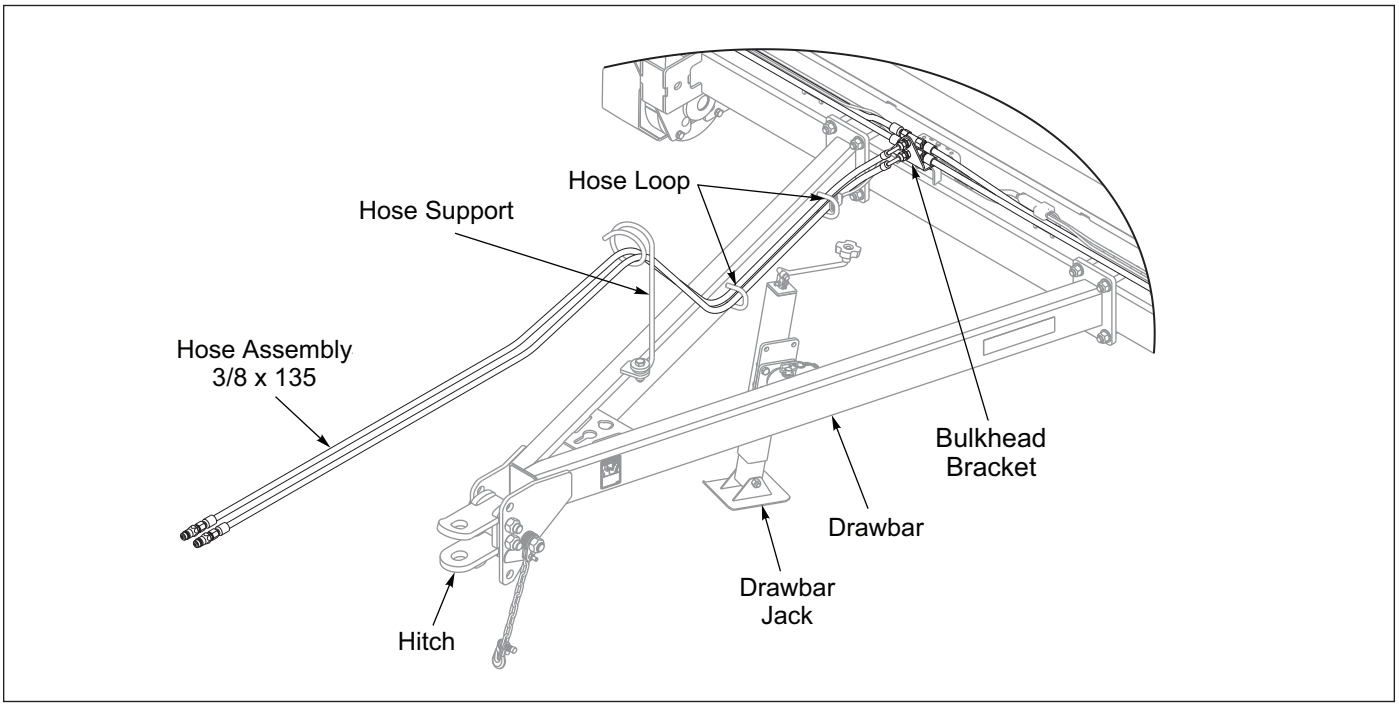

Figure 2-6: Hydraulic Installation

Purge the Hydraulic Lift System

The Hydraulic System is not filled with oil and should be purged of air before transporting and field operations.

1. Tractor must be hitched to the Till 'N Seed Drawbar and Hydraulic Lift Hoses connected.
2. Check to make sure the tractor hydraulic reservoir is full of the manufacturer's recommended oil.
3. If the Transport Locks are engaged, raise the Seeder and remove the Transport Locks. **See Figure 2-8.**
4. Slowly raise the machine until both Lift Cylinders are fully extended. Remove the Rear Roller Lock Pins from the ends of the Seeder that locks the Rear Roller Arms down and place them in the Toolbox. **See Figure 2-7.**

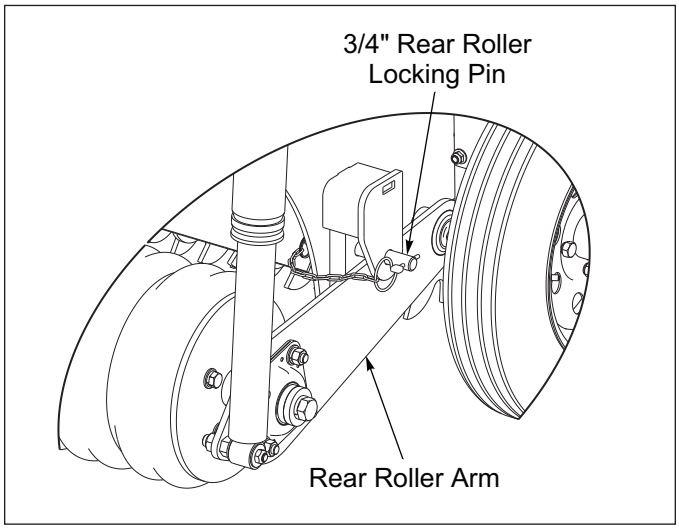

Figure 2-7: Rear Roller Locking Pin Engaged

5. Lower and raise the machine to verify that both Cylinders are working throughout the stroke. Fully extend the Lift Cylinders and continue to hold the lever until both Cylinder Rods movement stops. Raise/Lower machine 5 times to purge air from the system.
6. Do not loosen any Hydraulic Hoses or Fittings.
7. Recheck tractor reservoir to make sure it is within operating limits.
8. Raise the Till 'N Seed and install Transport Locks. **See Figure 2-9.**

Lift Circuit approximate oil requirement: 0.9 gallons.

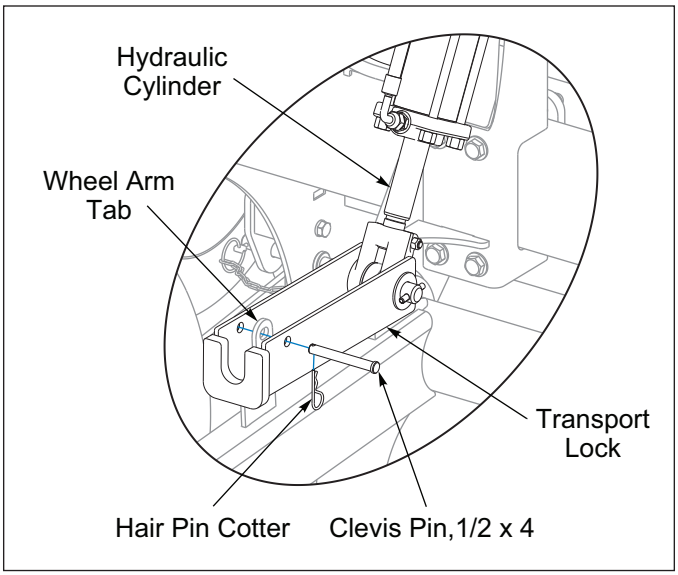

Figure 2-8: Transport Lock Stored

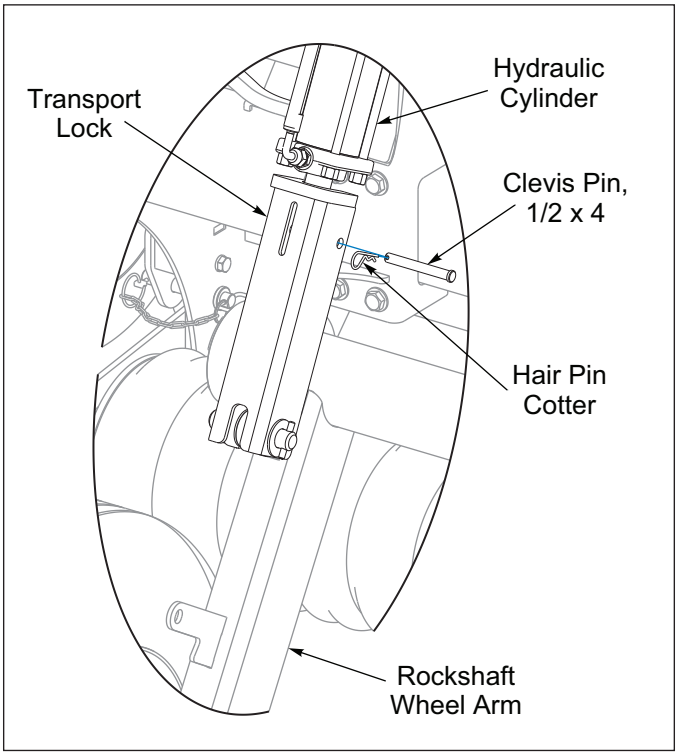

Figure 2-9: Transport Lock Engaged

Drawbar Model Warning Lamps Installation

IMPORTANT

Cords are marked Yellow Tape for Left and Green Tape for Right.

1. Lay out the 7-Pin Harness along the Drawbar with the 4-Prong Connector towards Seeder. Route the 7-Pin Harness 4-Prong Connector through the Hose Support and Drawbar Hose Loops to the Seeder. Connect 7-Pin Harness 4-Prong Connector to the Lamp Wishbone Harness 4-Prong Connector. **See Figure 2-10.**
2. Bundle and secure with tie wraps after Hydraulic Hoses have been installed.
3. Connect 7-Pin Plug into Tractor and check Warning Lamp functions.

IMPORTANT

All harnesses must be firmly attached to machine frame members, so they don't sag or become torn loose by field debris. Use the tie wraps provided.

Check to be sure the harnesses at center of machine is slack enough so as not to be stretched or interfered with while rotating frame from transport to field working position and vice versa.

NOTE

The 7-Pin Harness connects to the tractor socket when in use. When not in use, it can be stored in the Plug Holder Cutout on the top of the Drawbar. Allow enough harness length to reach tractor socket and roll or fold up excess and secure to hydraulic hoses or Drawbar.

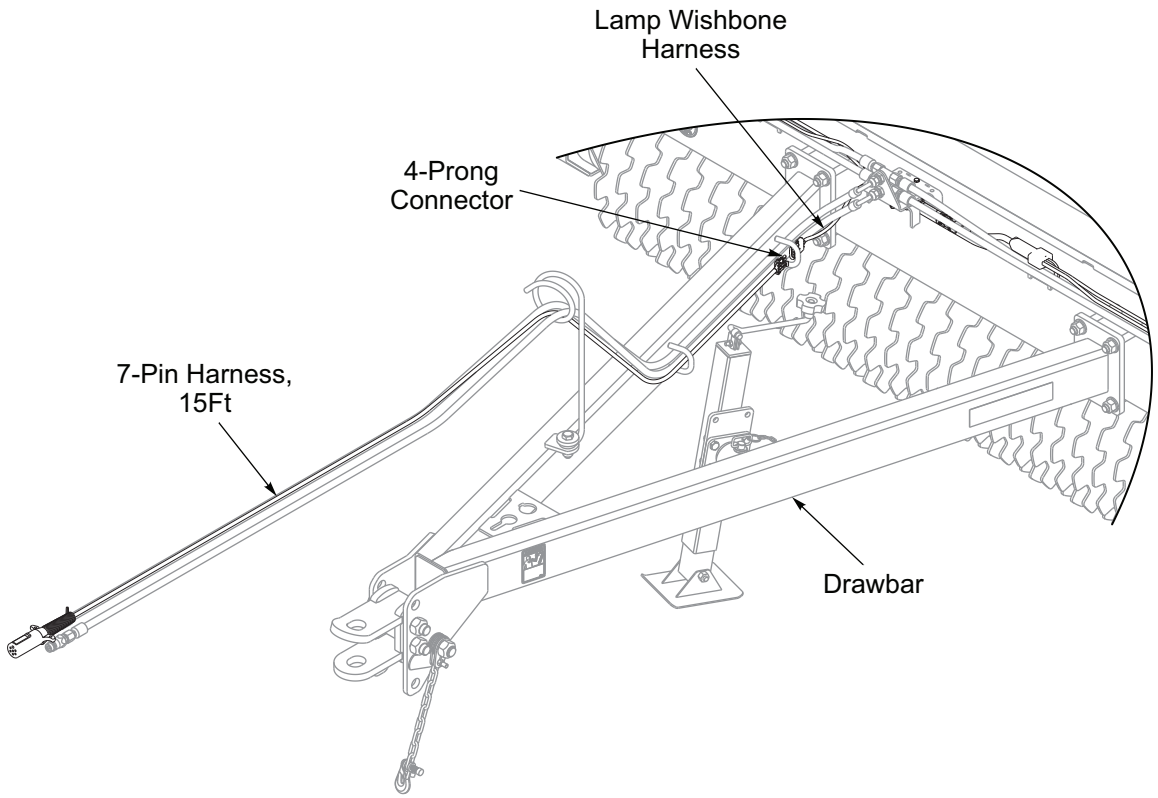

Figure 2-10: Drawbar Warning Lamps Installation

Agitator Installation

CAUTION

Blade Agitators orientation is important. Be sure to determine the direction of shaft rotation before installation.

IMPORTANT

Never force to add a Square Bore Washer since it will cause binding. Agitators must be free to rotate.

Blade Agitators are standard. Blade Agitators must be installed with careful attention to the direction of Shaft Rotation. **See Figure 2-11.**

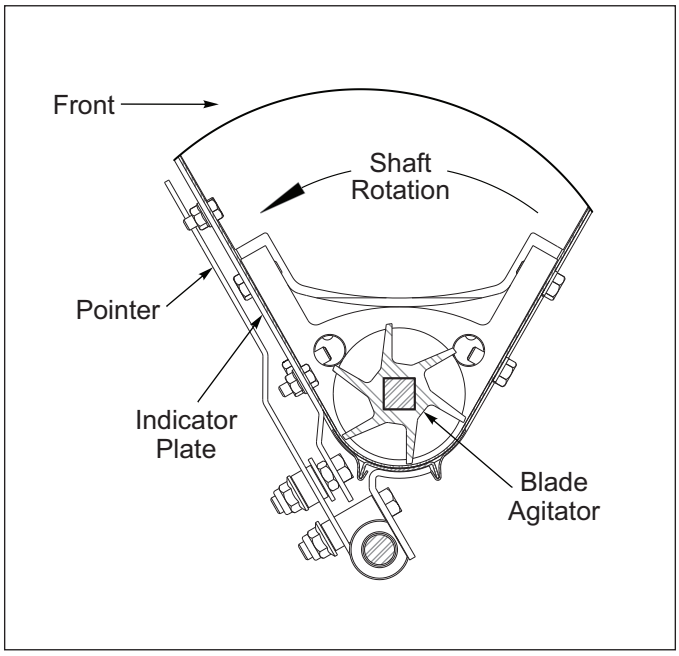

Figure 2-11: Blade Agitator Orientation

Contact the Brillion office for rates and compatibility with unlisted seed varieties

NOTE

Square Bore Washers are two thicknesses, 12ga and 14ga. It may be necessary to use more than one Square Bore Washer for proper fit between the Agitator Bearings.

1. On the RH end of the Agitator Seed Box, remove the 5/16-18 Hardware that attaches the Bearing Standoff to the RH Support. **See Figure 2-12.**
2. Slide the Agitator Shaft out of the end of the Seed Box. Bearing Standoff and Bearing should be still attached to the end of the Agitator Shaft.
3. Remove existing Agitators and Square Bore Washers.
4. If applicable, orient and place the Agitators inside the Seed Box. Place Square Bore Washers on each end of the Agitators to prevent seed leakage and to reduce Agitator end play between the Agitator Bearings. Never force to add a Square Bore Washer since it will cause binding. Agitators must be free to rotate.
5. Reinstall the Agitator Shaft aligning the Square Bore Bushings, Square Bore Washers, and Agitators.
6. Reinstall the Bearing Standoff to the end of the Seed Box with 5/16-18 Hardware.

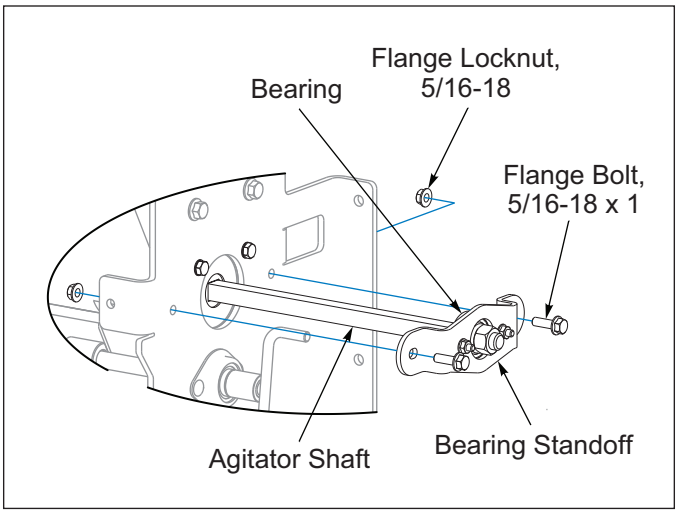

Figure 2-12: Agitator Assembly

Dual Wheel Kit - Optional

WARNING

Use a torque wrench to assure proper torque. Insufficient torque can cause stud breakage and damage the wheel pilots. Over torque can stress the Bolts and strip the threads.

NOTE

The Tire and Wheel Assembly is mounted with the valve stem facing outward from the Hub and Spindle Assembly.

IMPORTANT

Torque will drop after the first 10 hours of operation. Check the Wheel Bolts for proper torque after this interval and re-tighten them.

Additional Tire and Wheel Assemblies can be added to the Rockshaft Wheel Arms. Tires are 9.5L-15, 8 Ply Rating and should be inflated to 44 PSI.

1. Lower the Till 'N Seed.
2. Apply Anti-Seize to the end of the Spindle.
3. Install a Hub and Spindle Assembly into each Rockshaft Wheel Arm Sleeve. Secure with 3/8-16 x 3 Bolt and Locknut. **See Figure 2-13.**
4. Install a Tire and Wheel Assembly onto each Hub with 1/2-20 x 1 Wheel Bolts. Tighten Wheel Bolts to 50 Ft-Lbs using the Sequence in **Figure 2-4.** Then tighten to a full torque of 80-85 Ft-Lbs.

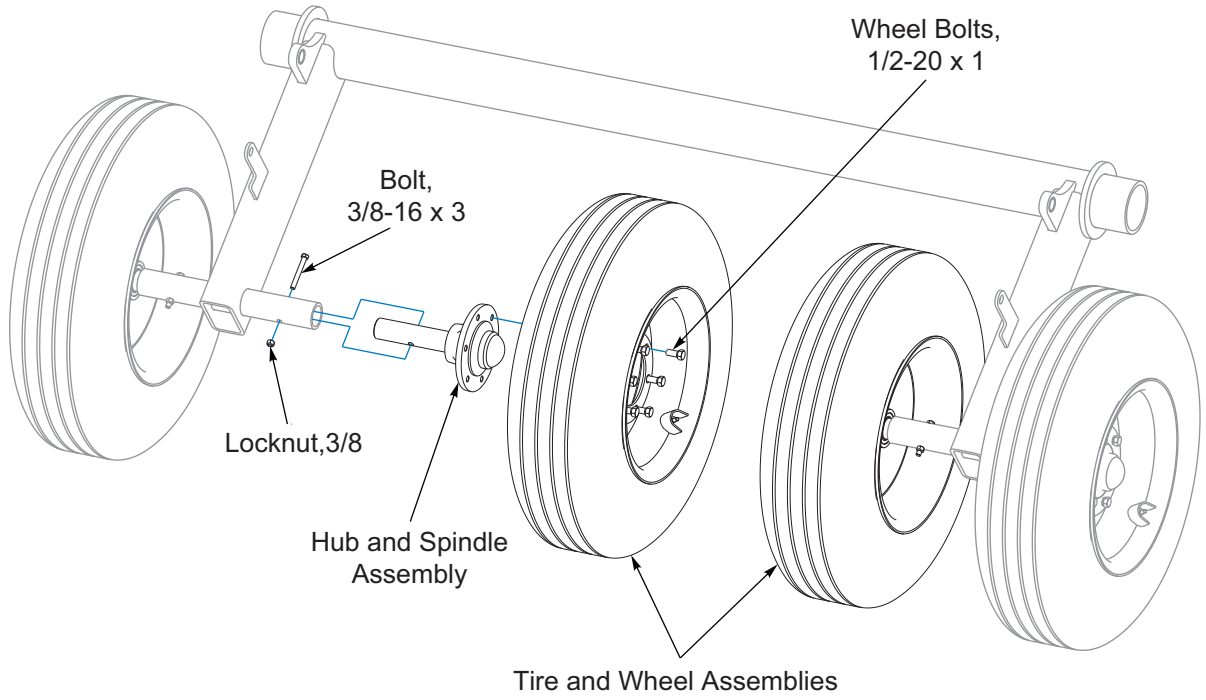

Figure 2-13: Dual Wheel Assembly

Acre Meter Kit - Optional

The Acre Meter consists of three main parts: the Acre Meter, the Pick-Up Switch and the Magnet Wheel Assembly.

1. Install Acre Meter Angle to LH Support with 5/16-18 x 1 Flange Bolts and Locknuts. See Figure **See Figures 2-15 and 2-16.**
2. Slide the Magnet Wheel Assembly onto the Jackshaft. Secure with Magnet Wheel Assembly Set Screw.
3. Attach the Pick-Up Switch to the Acre Meter Angle with #8-32 x 1-1/4 Screws, Flat Washers, Lock Washers, and Nuts. Do not tighten at this time.
4. Attach the Pick-Up Switch short ground wire to the small hole on the acre Meter Angle with a #6-32 x 1/2 Screw and Nut. Remove paint under the wire connector to assure a good electrical ground connection. **See Figure 2-14.**
5. Adjust the Pick-Up Switch on the Acre Meter Angle so the centerline of Magnet Wheel Assembly and Pick-Up Switch are horizontally and vertically aligned with maximum 1/8" between the Magnet Wheel Assembly and the Pick-Up Switch. Tighten #8-32 Screws.

NOTE

Alignment of the Pick-Up Switch and Magnet Wheel Assembly is critical. Improper alignment will cause the Acre Meter to record acres erratically or not at all.

6. Attaching Acre Meter Assembly to Till 'N Seed.

   Acre Meter with Micro-Meter and Large Meter Seed Boxes.

   Attach the Acre Meter Assembly to the Large Meter Seed Box Rear Deflector with 3/8-16 x 1 Bolt, Flat Washer, Lock Washer and Nut. **See Figure 2-15.**

   Acre Meter with Agitator Box.

   Attach the Acre Meter Assembly to the Agitator Box Rear Deflector with 3/8-16 x 1 Bolt, Flat Washer, Lock Washer and Nut. **See Figure 2-16.**
7. Connect the Acre Meter and Pick-Up Switch Connectors.
8. Securely fasten the cords to the Till 'N Seed with tie wraps to prevent cords from becoming entangled or rubbing on moving parts.
9. Program the Acre Meter. **See "Electronic Acre Meter Kit - Optional" on page 3-16.**

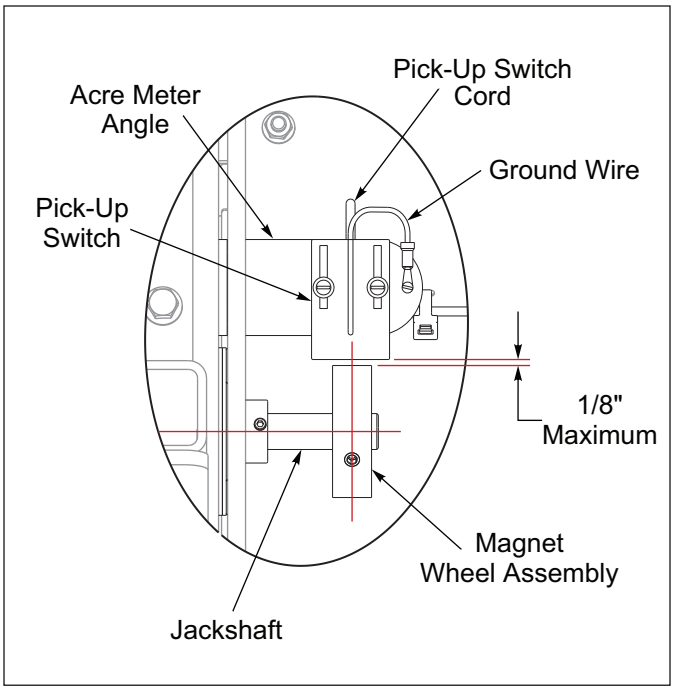

Figure 2-14: Acre Meter Mounting Dimension

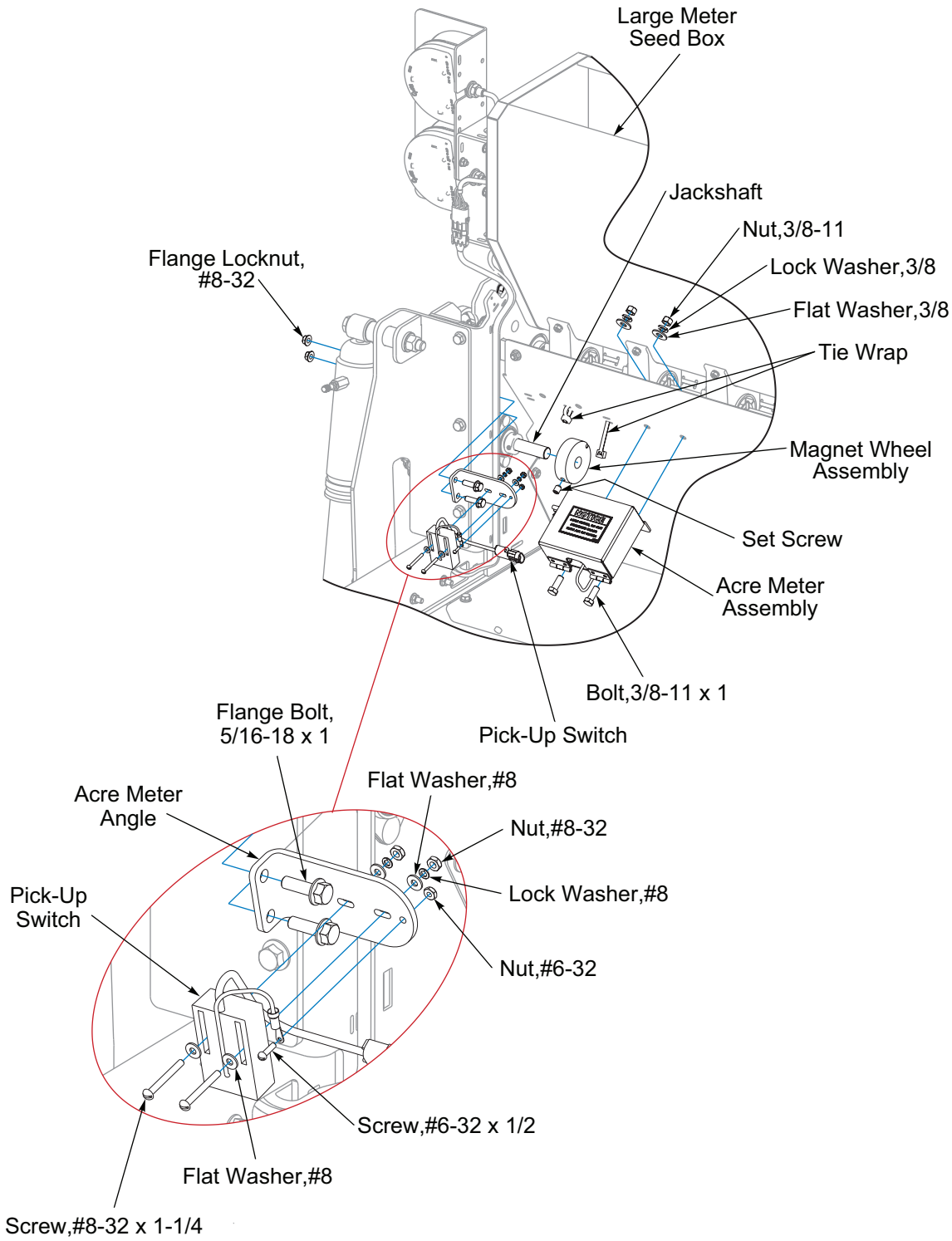

Figure 2-15: Acre Meter with Micro-Meter and Large Meter Seed Boxes

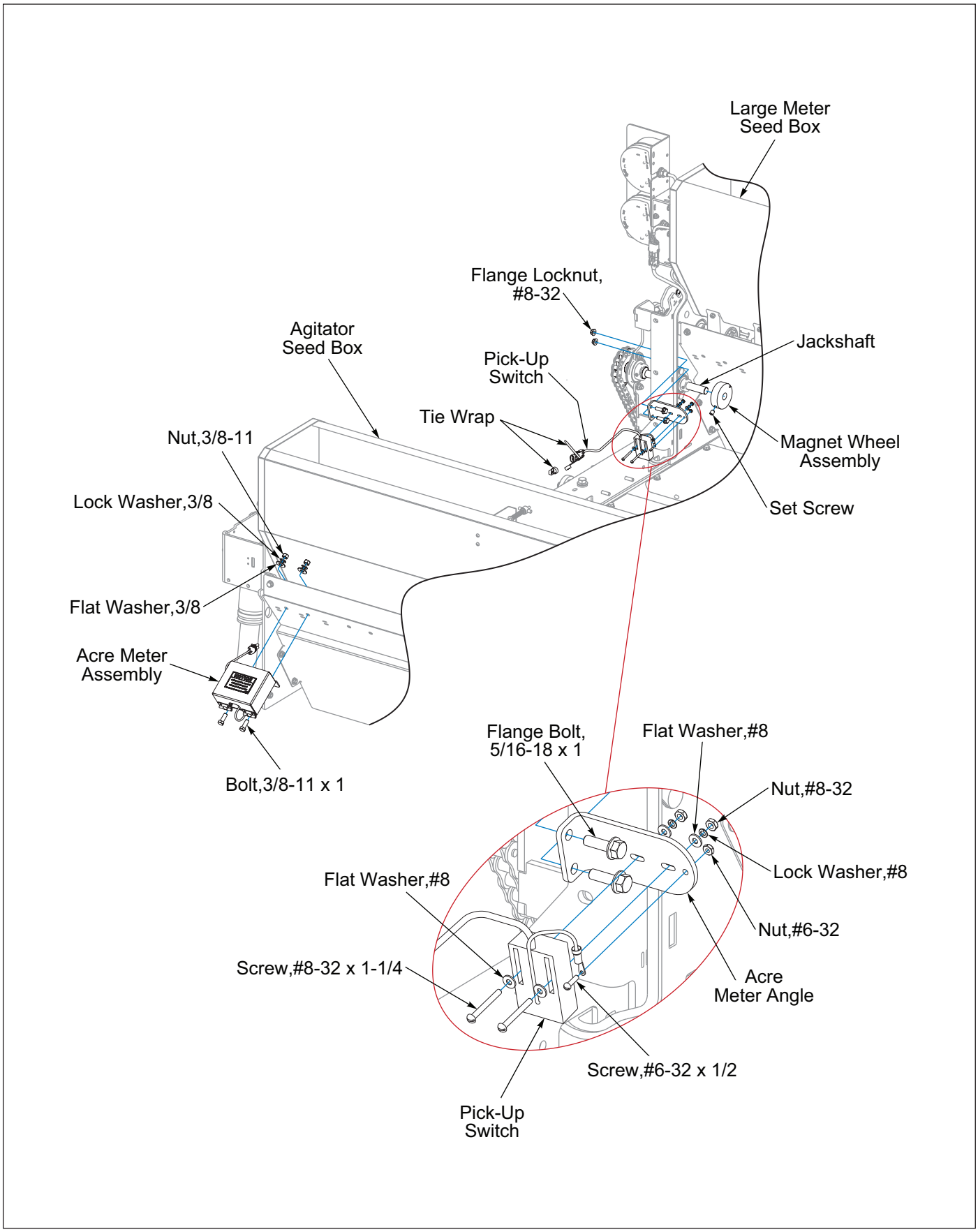

Figure 2-16: Acre Meter with Agitator Box

Table provided for general use.

NOTES:

Chapter 3

Operation

DANGER

Never allow anyone to ride on the Seeder at any time. Allowing a person to ride on the machine can inflict serious personal injury or death to that person.

DANGER

All hydraulically elevated equipment must have Transport Locks installed or be lowered to the ground, when servicing or when equipment is idle. Failure to take preventive measures against accidental lowering can result in serious personal injury.

CAUTION

When transporting farm implements on public roads, it is the responsibility of the operator to abide by state and local laws concerning wide loads, speed, safety emblems and safety lighting equipment. Drive at safe speeds, particularly when rounding corners, crossing rough ground or driving on hillsides, to prevent tipping the tractor.

DANGER

Always lock the Tractor Drawbar in the center position when transporting the unit. Failure to do so can result in serious injury or death and cause damage to the machine.

DANGER

When transporting the unit, place Transport Locks in position after fully extending the Hydraulic Lift Cylinders. Insert Clevis Pin and Hair Pin Cotter to secure the Transport Locks. Failure to use the Transport Locks can cause the unit to settle during transport, which can result in serious injury or death and cause damage to the equipment.

WARNING

Keep all bystanders away from the machine when folding/unfolding or transporting.

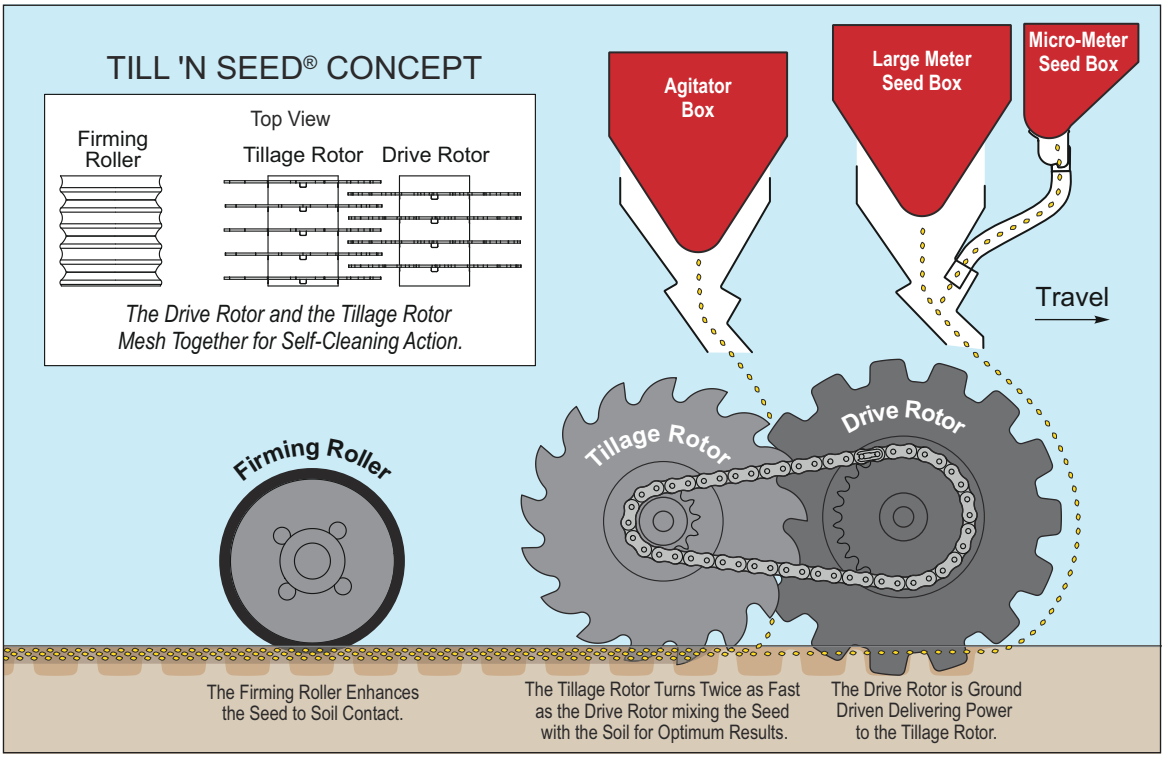

Tractor Preparation

The Brillion Till 'N Seed is available as a Pull-Type Hitch or 3-PT Hitch version.

- A Pull Type seeder is equipped to be pulled by a tractor with a drawbar, no clevis.
- A 3-PT mounted seeder is compatible with Category 2 or 3 Free Link, Category 2, 3N or 3 Quick Hitch Coupler.

Tractor Preparation for Attaching 3-PT Hitch Till 'N Seed

1. The Brillion Till 'N Seed is designed to be pulled with Category 2 or 3 Free Link, and Category 2, 3N, or 3 Quick Hitch Coupler. **See Figure 3-1.** Be sure Tractor's Hitch Capacity is not exceeded by the Laden Mass of the Seeder. **Refer to Tractor Operator's Manual.**
2. Be sure Tractor is properly ballasted. A minimum 25% of Tractor and Equipment Laden Mass must be on Tractor Front Wheels in transport position to maintain stability. Calculate the Loaded Seeder Mass. **See "Specifications" in Chapter 5.** (Seeder weight plus the seed box capacity with desired seed.) **Refer to Tractor Operator's Manual.**
3. Check the Tractor tire inflation levels to ensure that they are properly inflated for the additional Laden Seeder Mass. **Refer to the Tractor Operator's Manual.** Be sure not to over ballast and exceed Tractor Tire Capacity.
4. Set Tractor 3-PT Lower Links to allow lateral (torsional) float. **Refer to Tractor Operator's Manual.** If left rigid, the Brillion Till 'N Seed may not follow ground contours resulting in poor germination.
5. Set Lift Rod length long enough to ensure Seeder can float downward in the case of a furrow or waterway. Lower Links should be the same height, leveling the Brillion Till 'N Seed side to side. Fine adjustments may need to be made after hookup is completed. **Refer to the Tractor Operator's Manual.**
6. Attach the Till 'N Seed to the Tractor's 3-PT Free Link or Quick Hitch Coupler using the appropriate size pins and bushings. Be sure to use the hardware provided and is in good working order. **See Figure 3-1.**
7. Refer to the Tractor Operator's Manual for Quick Hitch Coupler Operation.

DANGER

Do not allow any bystanders to stand between the tractor and the machine while backing up to the machine.

8. Connect the 7-Pin Connector to Tractor Outlet, routing cable by avoiding pinch points.
   - Make sure the tractor has a good clean receptacle, free of dirt and corrosion.
   - Make sure the 7-Pin Connector is inserted ALL the way in. With tighter fitting pins, operator may think the Connector is all the way in, but really isn't.
   - Make sure the tractor receptacle cover latches over the keyway on the 7-Pin Connector to hold the Connector in place.
   - If an operator plugs in the 7-Pin Connector, but the lights do not seem to work right, check the above items to make sure there is a good connection with the 7-Pin Connector.
9. Raise the Till 'N Seed. Remove Rear Roller Locking Pins from both sides and place them in the Toolbox. Raise Parking Stands, both sides. **See Figures 3-2 and 3-3.** Adjust or lock tractor sway stabilizers if equipped, centering the Seeder with the Tractor. **Refer to the Tractor Operator's Manual.**
10. Lower the Till 'N Seed, if necessary level Seeder side to side (laterally) by adjusting Lift Rod length. Level Seeder front to back by adjusting the Tractor Upper Link length as required. **Refer to the Tractor Operator's Manual.**

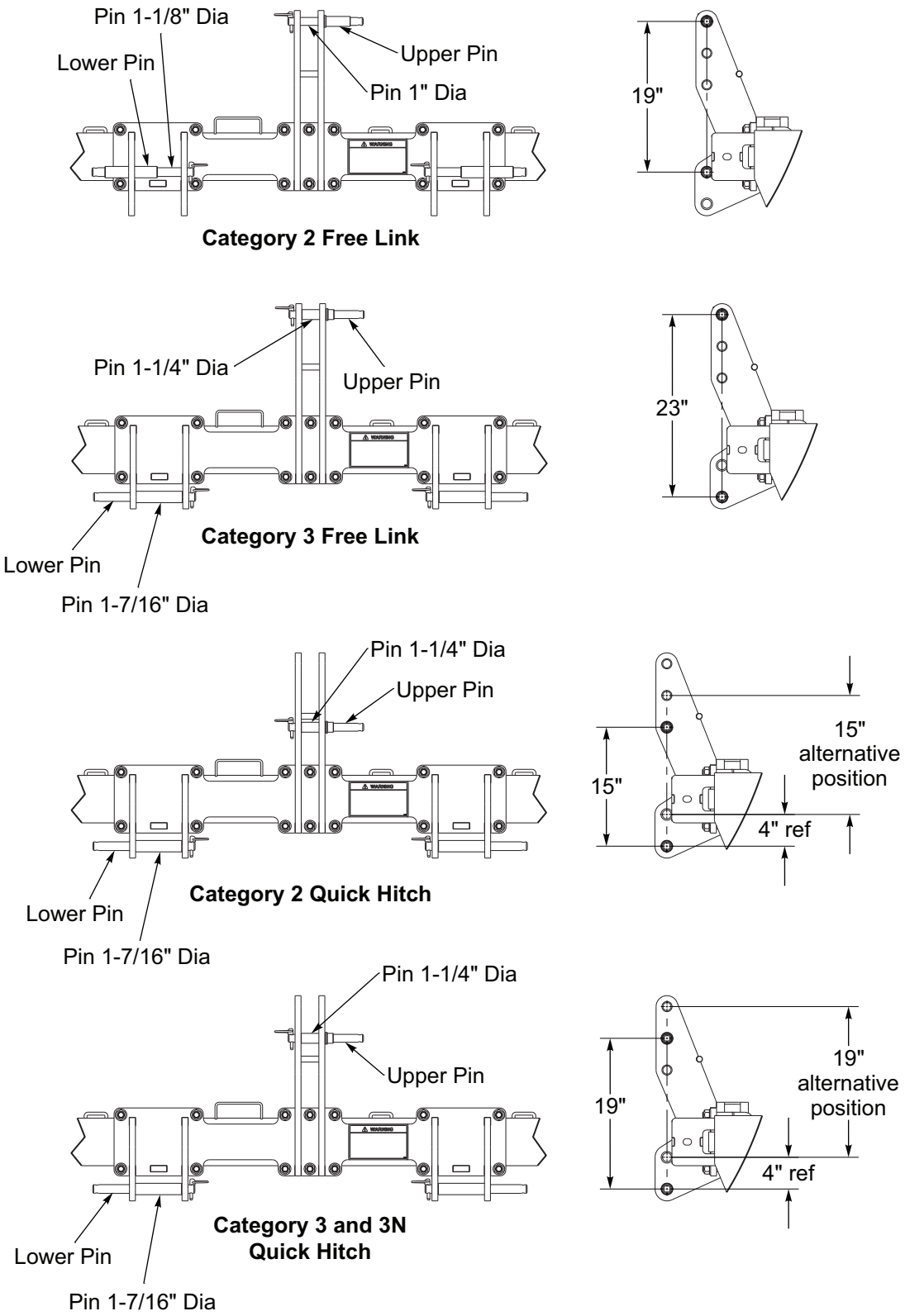

Figure 3-1: 3-PT Hitch Categories

Attaching/Detaching 3-PT Hitch Till 'N Seed

WARNING

To prevent the implement from tipping forward on the frame, disengage parking stand only when the seeder is fully attached to the tractor. Be sure to observe the following sequences.

Hooking Up the Till 'N Seed:

1. Attach the Till 'N Seed to the tractor. Raise the Seeder.
2. Raise Parking Stands by removing each Parking Stand 3/4" Pin and lifting the Parking Stand until the bottom hole is aligned with the bracket hole. Replace the 3/4" Pin. **See Figure 3-2.**
3. Remove both 3/4" Rear Roller Locking Pins from the Frame LH and RH End Plates and place them in the Toolbox. **See Figure 3-3.**

Unhooking the Till 'N Seed:

1. Raise the Till 'N Seed. Lower Parking Stands by removing each Parking Stand 3/4" Pin and lowering the Parking Stand. Align one of the three holes with the bracket hole depending upon the site ground, replace the 3/4" Pin. **See Figure 3-2.**
2. Both sides, insert 3/4" Rear Roller Locking Pins into the Frame LH and RH End Plates to lock the Rear Roller Arm. **See Figure 3-3.**
3. Lower the Till 'N Seed and disconnect the tractor from Seeder.

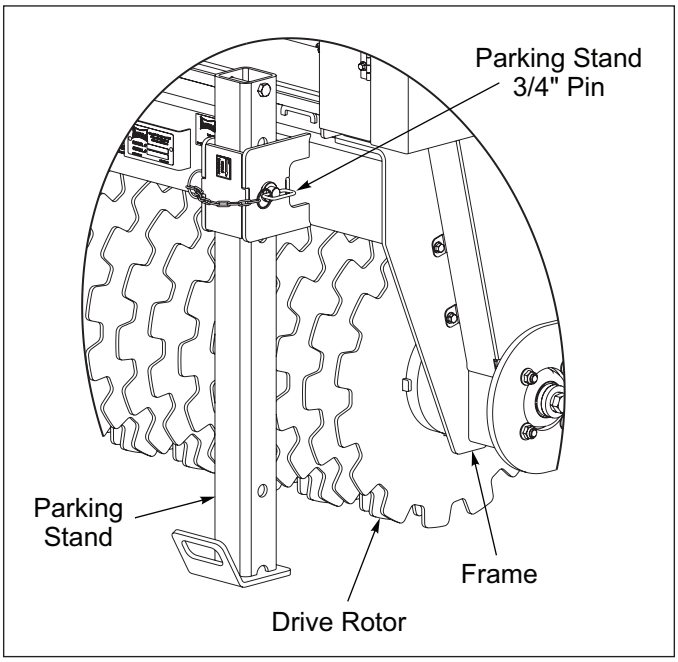

Figure 3-2: Parking Stand

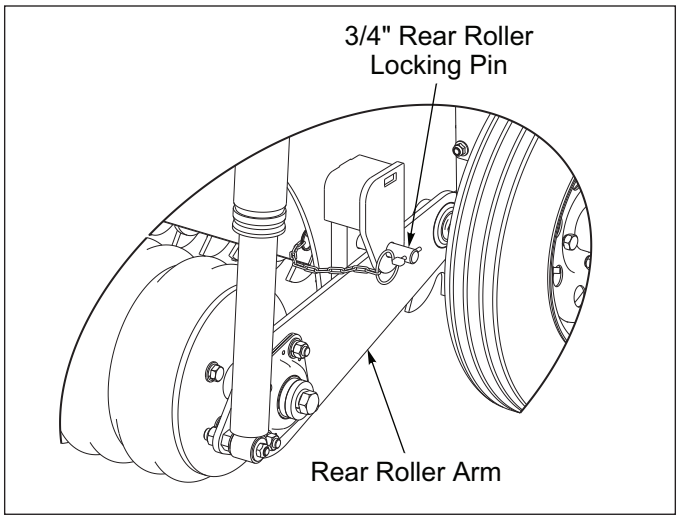

Figure 3-3: Rear Roller Locking Pin Engaged

Tractor Preparation for Attaching Pull Type Till 'N Seed

DANGER

Do not allow any bystanders to stand between the tractor and the implement while backing up to the implement.

1. The Till 'N Seed is designed to be used with a Category 2 Drawbar Hitch.
2. Align the Tractor Drawbar with the machine. Raise or lower the Drawbar Hitch as needed using the Jack. Attach the unit with proper size Hitch Pin and Safety Clip. **See Table 3-1.**

DRAWBAR CAT	Min Pin Size	Max PTO HP
2	1-1/4" (30mm)	154 (115 Kw)

Table 3-1: Pin Size

3. Raise and rotate Jack to stored position before setting the machine in motion.
4. Clean all hydraulic couplings and attach to the tractor.
5. Attach Safety Chain to tractor allowing plenty of movement for turning both directions. The Safety Chain should latch securely to prevent it coming loose. **See "Safety Chain" on page 1-4.**
6. If Transport Locks are not engaged, fully extend the hydraulic lift cylinders and rotate Transport Locks in the engaged position over the Cylinder Rods. Secure with the Clevis Pins and Hair Pin Cotters. **See Figure 3-4.**

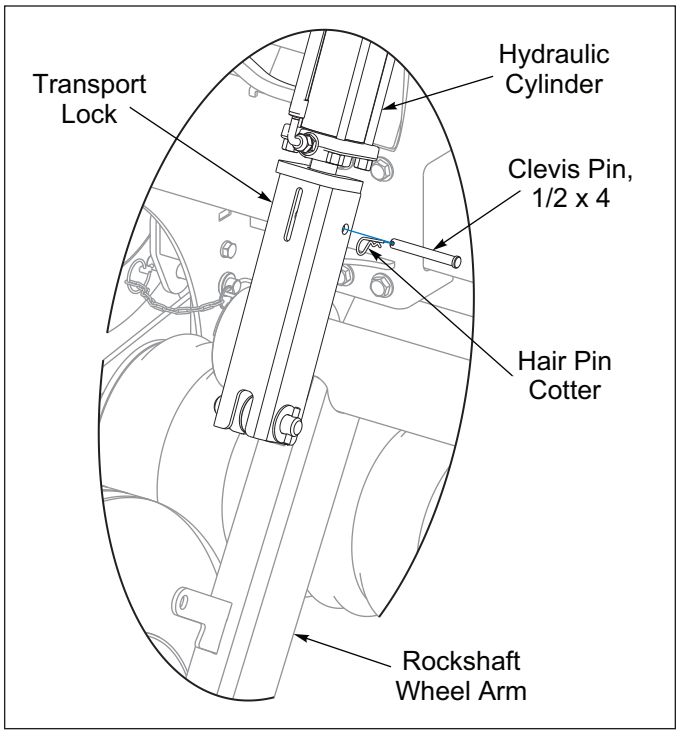

Figure 3-4: Transport Lock Engaged

7. Connect the 7-Pin Connector to Tractor Outlet, routing cable by avoiding pinch points.
   - Make sure the tractor has a good clean receptacle, free of dirt and corrosion.
   - Make sure the 7-Pin Connector is inserted ALL the way in. With tighter fitting pins, operator may think the Connector is all the way in, but really isn't.
   - Make sure the tractor receptacle cover latches over the keyway on the 7-Pin Connector to hold the Connector in place.
   - If an operator plugs in the 7-Pin Connector, but the lights do not seem to work right, check the above items to make sure there is a good connection with the 7-Pin Connector.

Attaching/Detaching Pull Type Till 'N Seed

Attaching the Till 'N Seed for Field Operations:

Till 'N Seed is parked lowered

1. Attach the Till 'N Seed to the Tractor.
2. Raise the Till 'N Seed fully to extend the Hydraulic Lift Cylinders and rotate the Transport Locks in the engaged position over the Cylinder Rod. Secure with the Clevis Pins and Hair Pin Cotters. **See Figure 3-4.**
3. Raise and rotate Jack to stored position before setting the machine in motion.
4. Transport the Till 'N Seed to the area to be seeded.
5. Disengage each Transport Lock so the Transport Lock rests on the Wheel Arm. Secure with Clevis Pin and Hair Pin Cotter into the Wheel Arm Tab. **See Figure 3-5.**

Till 'N Seed is parked raised

1. Attach Till 'N Seed to the Tractor.
2. Raise and rotate Jack to stored position before setting the machine in motion.
3. If not already done, raise Till 'N Seed fully and engage Transport Locks. **See Figure 3-4.**
4. Transport the Till 'N Seed to the area to be seeded.
5. Disengage each Transport Lock so the Transport Lock rests on the Wheel Arm. Secure with Clevis Pin and Hair Pin Cotter into the Wheel Arm Tab. **See Figure 3-5.**

Detaching the Till 'N Seed:

Parking Till 'N Seed lowered

1. Raise the Till 'N Seed fully to extend the Hydraulic Lift Cylinders and rotate the Transport Locks to the stored position. Secure with the Clevis Pins and Hair Pin Cotters. **See Figure 3-5.** Lower the Till 'N Seed, relieve pressure from Hydraulic Hoses.
2. Rotate and Lower Jack.
3. Disconnect the Tractor from the Till 'N Seed.

Parking Till 'N Seed raised

1. Raise the Till 'N Seed fully to extend the Hydraulic Lift Cylinders and rotate the Transport Locks to the locked position. Secure with the Clevis Pins and Hair Pin Cotters. **See Figure 3-5.**
2. Relieve pressure from Hydraulic Hoses.
3. Rotate and lower Jack.
4. Disconnect the Tractor from the Till 'N Seed.

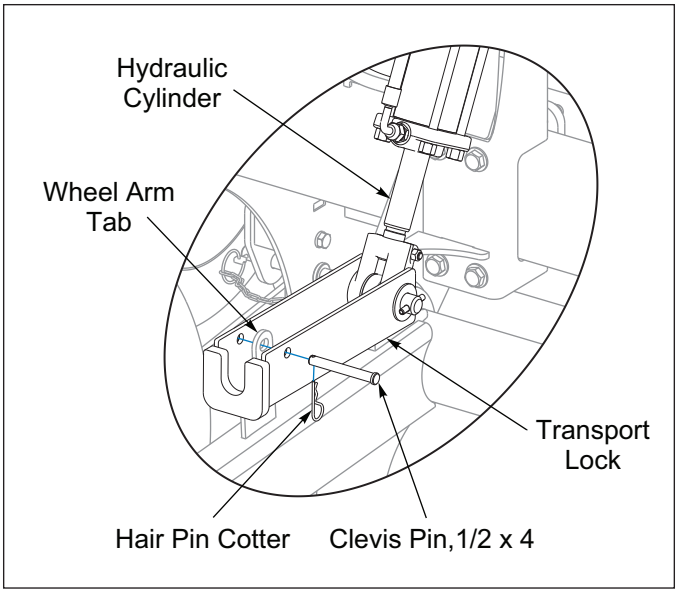

Figure 3-5: Transport Lock Stored

Hydraulic Lift System

The Drawbar Till 'N Seed is equipped with a Hydraulic Lift System to raise and lower the unit in the field.

WARNING

Escaping hydraulic fluid can cause serious personnel injury. Relieve system pressure before repairing, adjusting, or disconnecting. Wear proper hand and eye protection when searching for leaks. Use cardboard instead of hands (See Figure 3-6.) Keep all components (cylinders, hoses, fittings, etc.) in good repair.

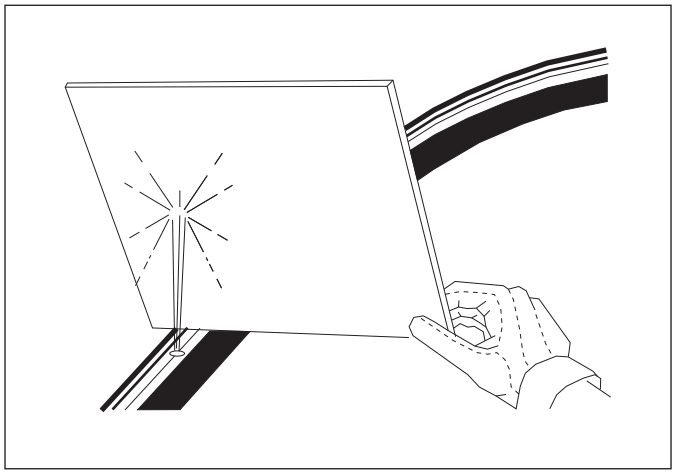

Figure 3-6: Hydraulic Leak Detection

The Hydraulic System is not filled with oil and should be purged of air before transporting and field operations.

1. Tractor must be hitched to the Till 'N Seed Drawbar and the Hydraulic Hoses connected.
2. Check to make sure the Tractor Hydraulic Reservoir is full of the manufacturer's recommended oil.
3. If the Transport Locks are engaged, raise the Till 'N Seed and disengage the Transport Locks. **See Figure 3-5.**
4. Slowly raise the Seeder until both Lift Cylinders are fully extended. Lower and raise the Till 'N Seed to verify that both Cylinders are working throughout the stroke. Fully extend the Lift Cylinders and continue to hold the lever until both Cylinder Rods movement stops. Raise/Lower Seeder 5 times to purge air from the system.
5. Do not loosen any Hydraulic Hoses or Fittings.
6. Recheck Tractor Reservoir to make sure it is within operating limits.
7. Raise the Till 'N Seed and install Transport Locks. **See Figure 3-4.**

Lift Circuit approximate oil requirement: 0.9 gallons.

Air Shock

DANGER

Wear Protective Gloves And Safety Glasses Or Goggles When Working With Air Shock.

Pressurized Air Shock May Violently Extend If Disconnected From Machine Without Releasing Its Air Pressure Prior To Removing.

The Till 'N Seed has a pair of Air Shocks that provides down force on the Tillage Rotor and a pair of Air Shocks that provides down force to the Rear Firming Roller.

- Air pressure can be increased or decreased through the Schrader Valve on each Air Shock. **See Figures 3-7 and 3-8.**

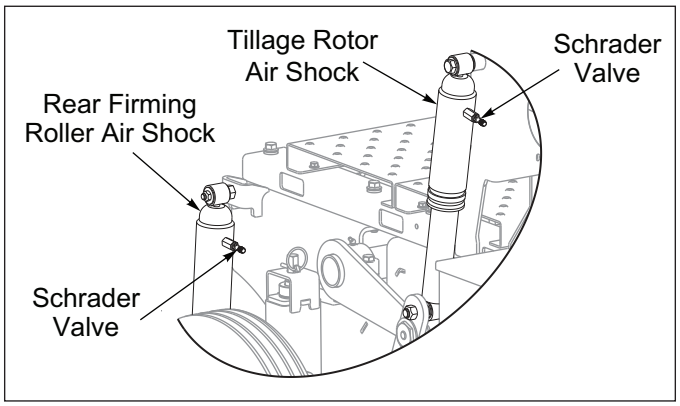

Figure 3-7: Air Shocks Right Side

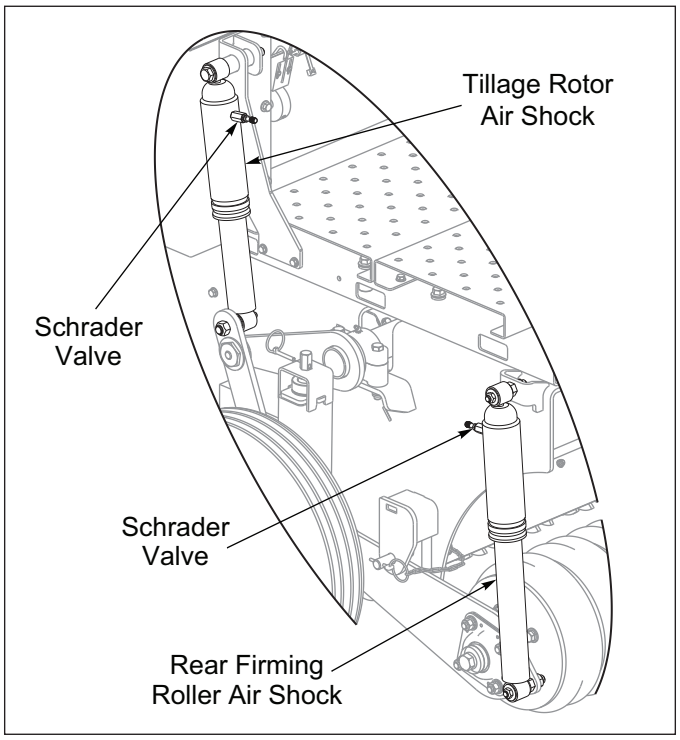

Figure 3-8: Air Shocks Left Side

- Check and adjust air pressure when machine is raised.
- Recommended starting Air Shock pressure is 50 psi. Typical air pressure range for this machine is 20-100 psi. In some instances more air pressure may be necessary, but do not exceed 120 psi. Optimal air pressure will vary depending on soil conditions
- Reduce air pressure on soft ground and increase air pressure on hard ground works best.

Gauge Wheels

Gauge Wheels are adjustable to control the depth of the Tillage Rotor. Engaging the Gauge Wheels with the ground will also help reduce Tillage Rotor bounce.

1. Adjust the Gauge Wheels by removing the Klik Pin and Hex Lock Clip. **See Figure 3-9.**

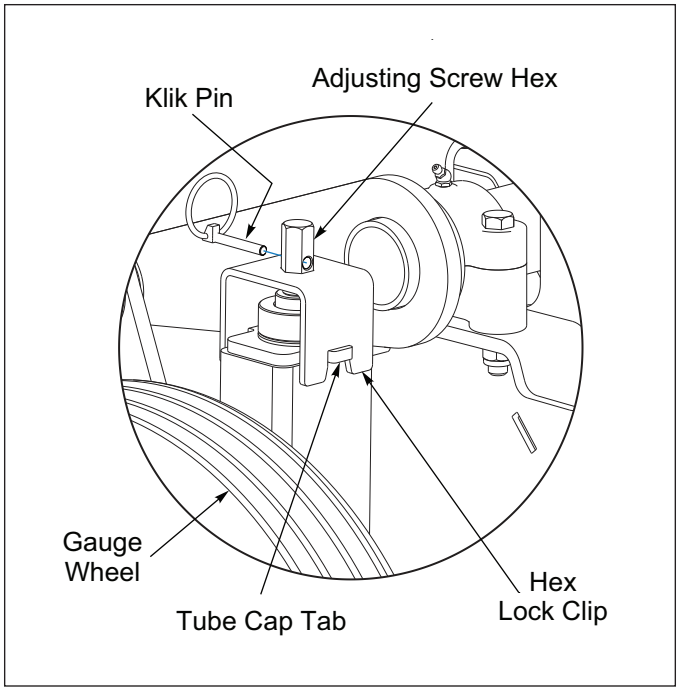

Figure 3-9: Adjusting Gauge Wheel

2. Place the Calibration Crank Assembly onto the Gauge Wheel Adjusting Screw Hex. **See Figure 3-10.**

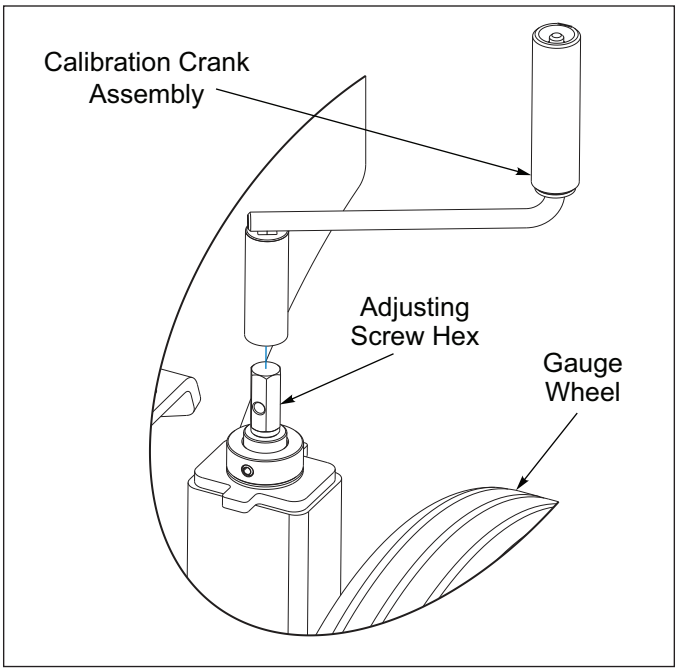

Figure 3-10: Calibration Crank Assembly

3. Turn the Calibration Crank to achieve the desired Tillage Rotor Depth. Use Wheel Arm Tube slots as a guide. **See Figure 3-11.**

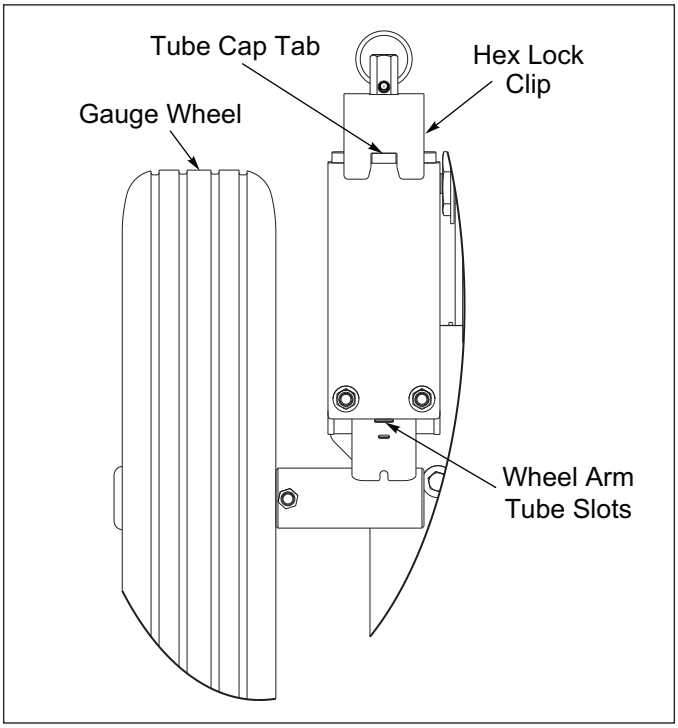

Figure 3-11: Gauge Wheel Detail

4. Align the Hex Lock Clip cutouts with the Tube Cap Tabs. Slide the Hex Lock Clip onto the Gauge Wheel Adjusting Screw Hex and over the Tube Cap Tabs. Secure with Klik Pin.
5. Remove Calibration Crank Assembly and place it in the Tool Box.

Micro-Meter and Large Meter Box - Seed Rate Adjustment

WARNING

- **To prevent damage to the seed meters, Do not apply excessive force to the adjusting nuts. Failure to do so may result in the seed being pinched between the cut-off and washer inside the seed cup.**
- **Do not close the meters more than 1/8" when there is seed in the meters without rotating the seed shaft. This prevents damage to the rotating washers and retainer rings in the seed meters.**
- **Do not attempt to open meters more than 1". (Feed rolls could become disengaged from washer in the seed cup.)**

NOTE

To avoid Seed Meter damage, if there is seed in the meters, decrease rate in small increments. Decrease rate no more than one nut revolution and rotate Seed Shaft to purge seed from meters. Continue adjustment as needed.

Before filling with seed be sure Seed Shaft turns freely and Seed Meters are free of any foreign matter.

Wrenches for adjustment and the Calibration Crank Assembly are stored in the toolbox. **See Figure 3-12.**

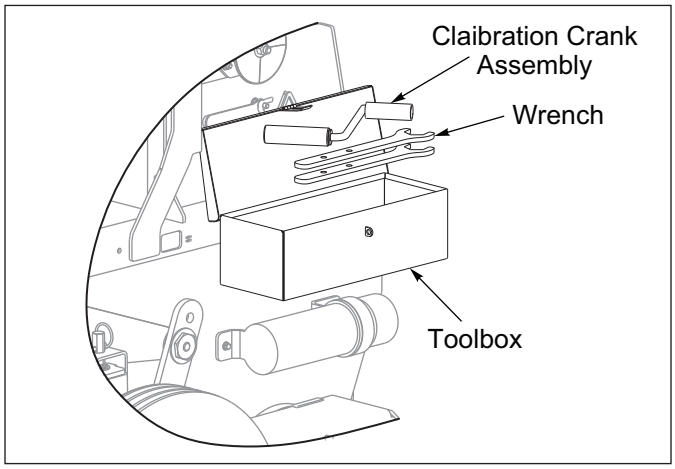

Figure 3-12: Adjustment Wrenches

Seed Rate Charts specific to the Seed Metering System are located inside the Seed Box Cover and in this manual. **See Figures 3-19 and 3-21.**

It should be used as a general guide only. Because of seed variation, a more accurate rate can be determined by performing a seed rate calibration for that specific Seed Box. **See "Micro-Meter Box Calibration for Unlisted Seeds" on page 3-9 and "Large Meter Box Calibration for Unlisted Seeds" on page 3-11.**

On the right side, the Seed Rate for the Seed Meters can be set by adjusting the Seed Rate Adjusting Nut and Adjusting Screw. **See Figures 3-13 and 3-14.**

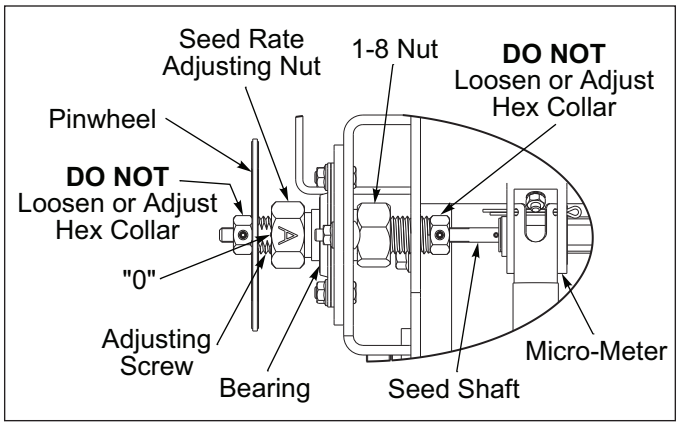

Figure 3-13: Micro-Meter Box Seed Rate Adjustment

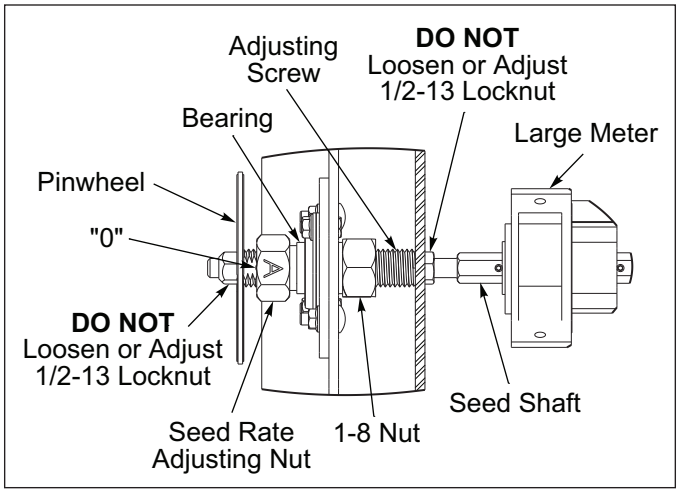

Figure 3-14: Large Meter Box Seed Rate Adjustment

IMPORTANT

DO NOT Loosen or Adjust the Hex Collar and the 1/2-13 Locknut . See Figures 3-13 and 3-14.

1. To **increase** the rate of seeding, loosen the 1-8 Nut and Seed Rate Adjusting Nut with the supplied wrenches. Back the 1-8 Nut away from the Bearing. Set the Seed Rate Adjusting Nut appropriate letter with the Adjusting Screw corresponding number for the desired Seed Rate. Tighten the 1-8 Nut up to the Bearing.
2. To **decrease** the rate of seeding, loosen the 1-8 Nut and Seed Rate Adjusting Nut with supplied wrenches. Set the Seed Rate Adjusting Nut appropriate letter with the Adjusting Screw corresponding number for the desired Seed Rate. Tighten the 1-8 Nut up to the Bearing.

Seed Meters discharge to the front of the machine to aid the operator in determining proper operation. Pinwheels on the RH end of the Seed Shafts aid the operator in identifying Seed Shaft rotation.

Micro-Meter Box Calibration for Unlisted Seeds

NOTE

Calibration Crank Assembly used for Calibration is stored in the toolbox.

Brillion assumes no liability pertaining to Seeding Rates achieved with this Seeder. Rates listed are general in nature and should be used as starting points only. Seed varieties and blends listed represent those calibrated through in-house test meters.

Variations in actual rates may be realized due to differences in seed lots. For accurate rates with seeds being used, follow the calibration instructions listed on the Seed Chart inside the Seed Box Cover or refer to this Manual. **See Figure 3-19.** *The information listed in the Seed Chart is subject to change without notice.*

Calibrate Unlisted Seeds as follows:

1. Seed Shaft turns 258 revolutions per acre seeded.
2. Raise machine and lock in Transport Position.
3. Place Calibration Tray in collection position to catch seed. Remove the 5/16-18 Wing Nuts that secure the Calibration Tray Cover over the opening in the RH Support Plate. **See Figure 3-15.** Remove the 5/16-18 Wing Nut that secures the Calibration Tray in the Storage position. Orient the Calibration Tray with Handle to the top and insert it into the RH Support opening. **See Figure 3-16.**
4. Remove Micro-Meter Drive Pin. **See Figure 3-17.**
5. Turn Transmission Micro-Meter Shaft Calibration Hex 258 revolutions Clockwise (CW) with provided Crank, 43 turns may be used if results are adjusted as stated in Step 6.
6. Weigh seed for approximate planting rate in lbs/acre. Multiply weight by 6, if only 43 turns were used.

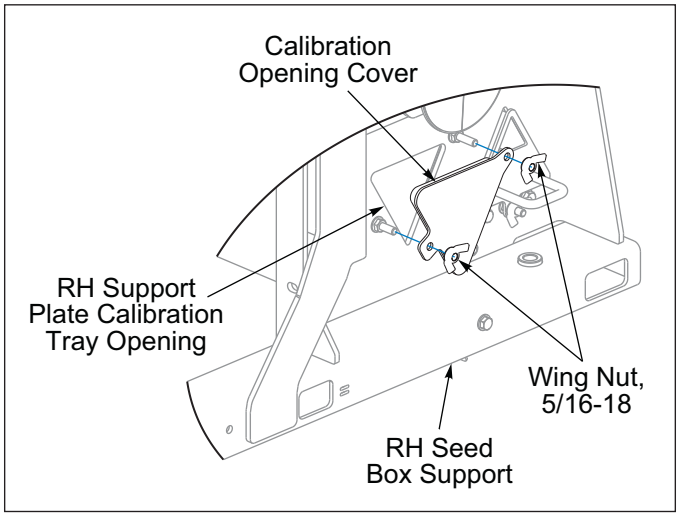

Figure 3-15: Calibration Opening Cover

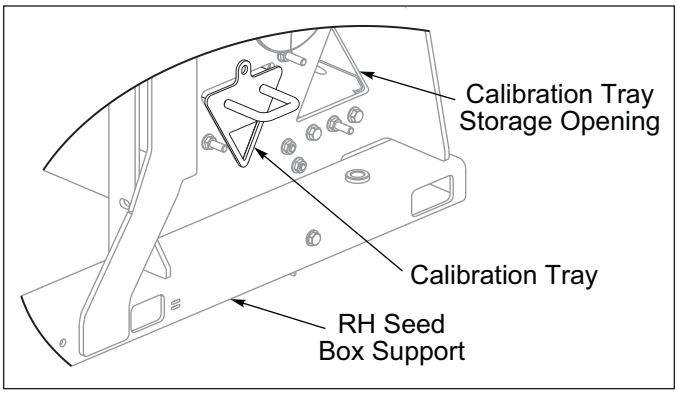

Figure 3-16: Calibration Tray Collection Position

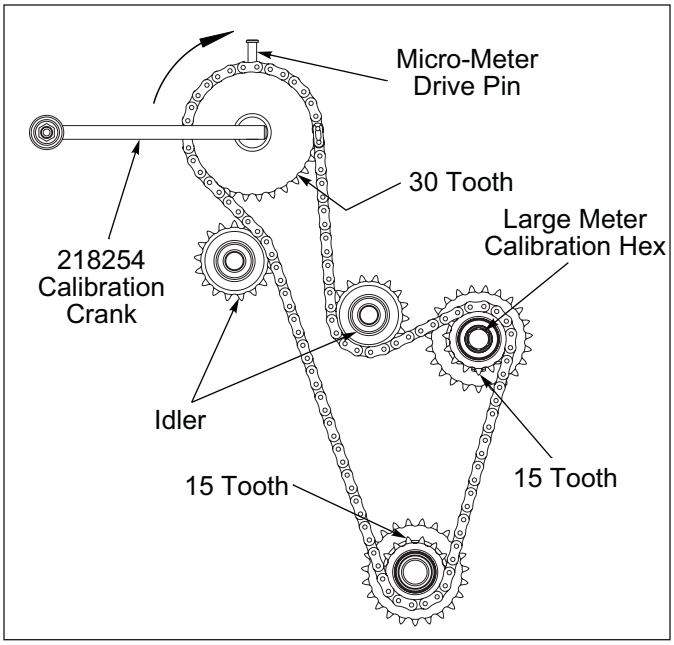

Figure 3-17: Micro-Meter Box Calibration

7. Install Micro-Meter Drive Pin.
8. Place Calibration Tray back in storage position. **See Figure 3-18.** Re-install Calibration Opening Cover over the opening in the RH Support Plate with 5/16-18 Wing Nuts.

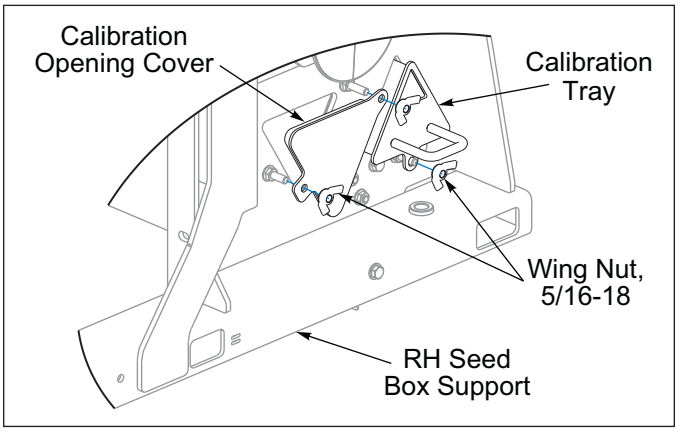

Figure 3-18: Calibration Tray Storage Position

Micro-Meter Box - Seed Rate Chart

PLANTING RATES FOR BPS8 MICRO-METER BOX IN POUNDS PER ACRE

RATES ARE INTENDED AS A GUIDE ONLY. VARIATIONS IN SIZE AND CLEANLINESS WILL AFFECT RATES. CHECK ACREAGE AND POUNDS OF SEED USED FOR BEST RESULTS.

INDICATOR SETTINGS	1A	2A	3A	4A	5A	6A	7A	8A
ALFALFA	4	7	14	20	24	30	35	41
ALFALFA (COATED)	4	9	14	19	26	32	37	43
BIRDSFOOT TREFOIL	4	9	15	21	28	35	42	48
CANARY, REED	1	4	6	8	10	13	15	21
CENTIPEDE	4	8	13	19	25	31	36	42
CLOVER, ALSIKE	4	8	13	18	23	28	34	39
CLOVER, DIXIE CRIMSON (UNCOATED)	4	10	17	24	31	38	45	53
CLOVER, MEDIUM RED	4	9	14	18	23	28	32	36
CLOVER, SEMINOLE LADINO	3	8	14	20	25	31	36	42
FESCUE, STF43 SOFT LEAF TALL	0	2	4	7	10	11	14	16
FESTOLIUM	1	3	6	10	13	16	20	22
LETTUCE	3	59	88	124	Settings Not Recommended			
MILLET	3	7	12	18	22	29	35	39
RAPE	4	8	14	21	25	29	33	39
RYEGRASS, ANNUAL	0	2	4	7	9	12	13	16
RYEGRASS, ITALIAN	1	4	7	11	14	18	22	25
SORGHUM SUDAN	0	9	17	24	31	38	45	51
SUGAR BEETS	0	9	16	22	28	33	40	42
SWITCHGRASS (CLEANED AND HULLED)	0	14	23	33	42	55	66	80
TEFF, TIFFANY (COATED)	4	10	14	21	28	32	39	45
TEFF, TIFFANY (UNCOATED)	4	8	12	18	24	30	37	44
TILLAGE RADISH	*	9	14	20	25	31	36	42
TIMOTHY, CLIMAX	3	7	12	19	25	31	37	41
TURNIPS	3	9	15	21	27	33	39	45

Note: * Some cracked seeds were observed at this setting

Figure 3-19: Seed Rate Chart - Micro-Meter Box

Large Meter Box Calibration for Unlisted Seeds

NOTE

Calibration Crank Assembly used for Calibration is stored in the toolbox.

Brillion assumes no liability pertaining to Seeding Rates achieved with this Seeder. Rates listed are general in nature and should be used as starting points only. Seed varieties and blends listed represent those calibrated through in-house test meters.

Variations in actual rates may be realized due to differences in seed lots. For accurate rates with seeds being used, follow the calibration instructions listed on the Seed Chart inside the Seed Box Cover or refer to this Manual. **See Figure 3-21.** *The information listed in the Seed Chart is subject to change without notice.*

Calibrate Unlisted Seeds as follows:

1. Seed Shaft turns 337 revolutions per acre seeded in low range. Seed Shaft turns 517 revolutions per acre seeded in high range.
2. Raise machine and lock in Transport Position.
3. Place Calibration Tray in collection position to catch seed. Remove the 5/16-18 Wing Nuts that secure the Calibration Tray Cover over the opening in the RH Support Plate. **See Figure 3-15.** Remove the 5/16-18 Wing Nut that secures the Calibration Tray in the Storage position. Orient the Calibration Tray with Handle to the top and insert it into the RH Support opening. **See Figure 3-16.**
4. Remove Large Meter Drive Pin. **See Figure 3-20.**
5. Turn transmission Large Meter Shaft Calibration Hex 337 revolutions clockwise (CW) for low range or 517 revolutions clockwise (CW) for high range with provided crank. 56 low range or 86 high range turns may be used if results are adjusted as stated in Step 6.
6. Weigh seed for approximate planting rate in lbs/acre. Multiply weight by 6 if only 56 low range or 86 high range turns were used.
7. Install Large Meter Drive Pin.
8. Place Calibration Tray back in storage position. **See Figure 3-18.** Re-install Calibration Opening Cover over the opening in the RH Support Plate with 5/16-18 Wing Nuts.

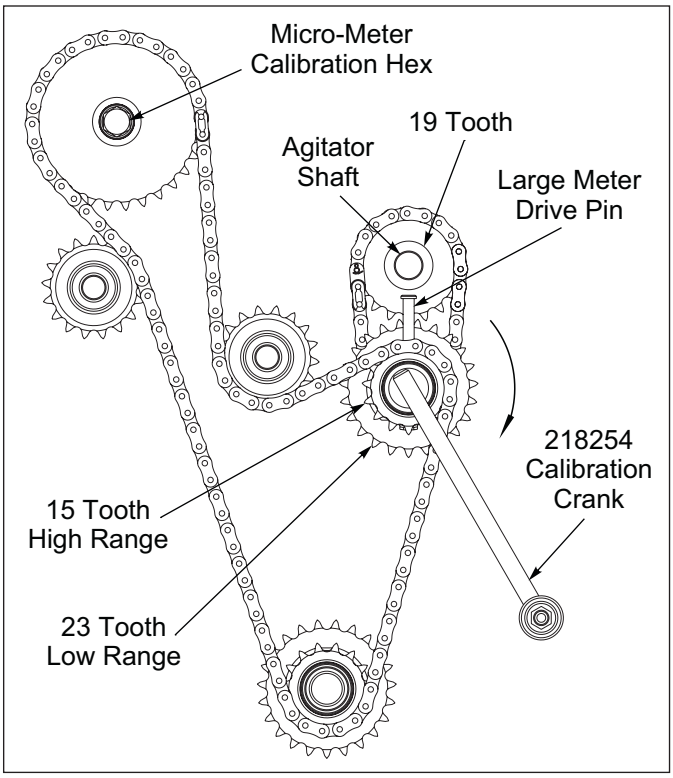

Figure 3-20: Large Meter Box Calibration

Large Meter Box - Seed Rate Chart

PLANTING RATES FOR BPS8 LARGE METER BOX IN POUNDS PER ACRE

RATES ARE INTENDED AS A GUIDE ONLY. VARIATIONS IN SIZE AND CLEANLINESS WILL AFFECT RATES. CHECK ACREAGE AND POUNDS OF SEED USED FOR BEST RESULTS.

INDICATOR SETTINGS	NOTES	RANGE	1A	2A	3A	4A	5A	6A	7A	8A
BARLEY	(1)	LOW	*	31	70	113	151	197	234	282
		HIGH	*	48	107	174	232	303	359	432
BERMUDA GRASS		LOW	13	31	51	80	118	154	194	225
		HIGH	21	48	79	122	180	236	298	345
BERMUDA GRASS (UNHULLED & COATED)		LOW	13	28	47	72	106	151	185	228
		HIGH	21	43	72	111	163	232	283	349
BLUEGRASS, KENTUCKY		LOW	6	16	27	47	73	93	118	142
		HIGH	9	24	41	72	113	142	180	218
BUCKWHEAT	(1)	LOW	*	33	68	105	145	186	222	275
		HIGH	*	51	104	161	222	285	341	422
CHICORY, FORAGE (COATED)		LOW	6	31	55	89	129	163	210	247
		HIGH	9	48	85	136	199	250	323	378
CORN (BIN RUN)	(1)	LOW	*	*	66	126	171	216	249	304
		HIGH	*	*	101	194	263	332	382	467
FESCUE, TALL		LOW	10	18	38	65	102	124	153	186
		HIGH	15	28	58	99	156	191	234	285
OATS	(1)	LOW	*	23	51	89	125	159	191	222
		HIGH	*	35	78	136	192	244	293	340
RYE GRAIN		LOW	6	35	76	120	164	197	251	297
		HIGH	10	53	117	184	252	303	385	455
RYEGRASS, ANNUAL		LOW	6	17	35	56	76	104	127	147
		HIGH	9	26	53	85	117	160	195	225
RYEGRASS, ITALIAN		LOW	5	25	50	81	113	151	181	213
		HIGH	8	38	76	124	174	232	277	327
RYEGRASS, PERENNIAL		LOW	6	23	47	76	111	144	175	208
		HIGH	10	35	71	117	170	221	269	318

INDICATOR SETTINGS	NOTES	RANGE	1A	2A	3A	4A	5A	6A	7A	8A
SORGHUM SUDAN		LOW	0	48	92	139	189	237	283	326
		HIGH	0	73	141	214	290	363	434	499
SOYBEANS	(1)	LOW	0	37	91	139	181	224	268	307
		HIGH	0	57	140	213	277	343	412	472
SUNFLOWER, PEREDOVIK		LOW	0	0	35	57	82	103	125	154
		HIGH	0	0	54	88	125	158	191	236
WINTER WHEAT	(1)	LOW	*	34	81	127	175	218	262	321
		HIGH	*	52	125	195	268	335	401	492

Notes:

(1) Low germination may occur due to shallow seeding depth for this seed

* Indicates intermittent flow or some cracked seeds were observed at this setting

Figure 3-21: Seed Rate Chart - Large Meter Box

Agitator Box - Seed Rate Adjustment

The Seed Rate Chart is located inside the Seed Box Cover and in this manual. **See Figure 3-28.** It should be used as a general guide only. Because of seed variations, a more accurate rate can be determined by turning the Agitator Shaft Calibration Hex on the Transmission to Calibrate the Seeder. **See "Agitator Box Calibration for Unlisted Seeds" on page 3-14.**

The Agitator Seed Box Seed Rate is adjusted by turning the Adjusting Screw Handle on the RH side of the Agitator Seed Box until the desired setting is indicated with the Pointer on the Indicator Mount. **See Figure 3-22.**

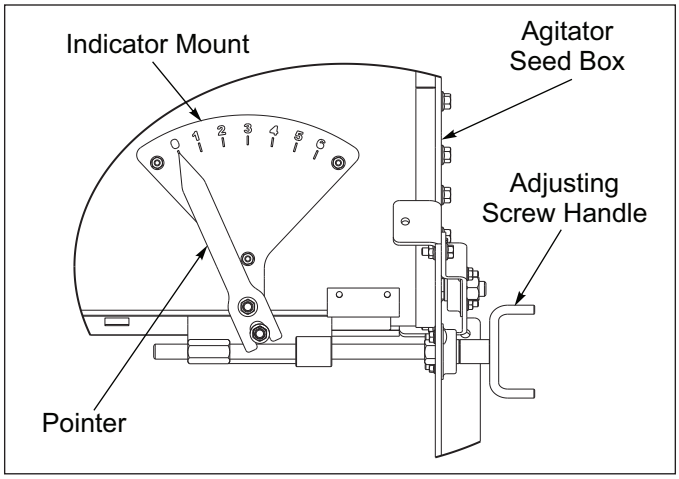

Figure 3-22: Agitator Box Adjuster

Blade Agitators are standard. **See Figure 3-23.** Contact the Brillion office for rates and compatibility of unlisted seed varieties.

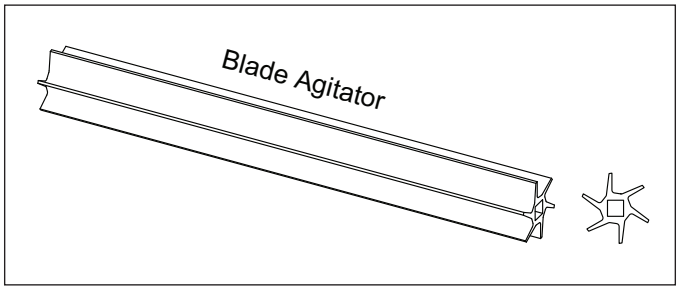

Figure 3-23: Blade Agitator

Agitator Box Calibration for Unlisted Seeds

NOTE

Calibration Crank Assembly used for Calibration is stored in the toolbox.

Brillion assumes no liability pertaining to Seeding Rates achieved with this Seeder. Rates listed are general in nature and should be used as starting points only. Seed varieties and blends listed represent those calibrated through in-house test meters.

Variations in actual rates may be realized due to differences in seed lots. For accurate rates with seeds being used, follow the calibration instructions listed on the Seed Chart inside the Seed Box Cover or refer to this manual. **See Figure 3-28.** *The information listed in the Seed Chart is subject to change without notice.*

Calibrate Unlisted Seeds as follows:

1. Agitator Shaft turns 456 revolutions per acre seeded.
2. Raise machine and lock in Transport Position.
3. Place Calibration Tray in collection positions to catch seed. Remove the 5/16-18 Wing Nuts that secure the Calibration Tray Cover over the opening in the Agitator Box RH Support Plate. **See Figure 3-24.** Remove the 5/16-18 Wing Nut that secures the Calibration Tray in the storage position. Orient the Calibration Tray with Handle to the top and insert it into the Agitator Box RH Support opening. **See Figure 3-25.**
4. Remove Agitator Drive Pin. **See Figure 3-26.**
5. Turn Transmission Agitator Shaft Calibration Hex 456 revolutions clockwise (CW) with provided Crank. 76 turns may be used if results are adjusted as stated in Step 6.
6. Weigh seed for approximate planting rate in lbs/acre. Multiply weight by 6, if only 76 turns were used.
7. Install Agitator Drive Pin.
8. Place Calibration Tray back in storage position. Secure with 5/16-18 Wing Nut. **See Figure 3-27.** Re-install Calibration Opening Cover over the opening in the Agitator Box RH Support Plate with 5/16-18 Wing Nuts.

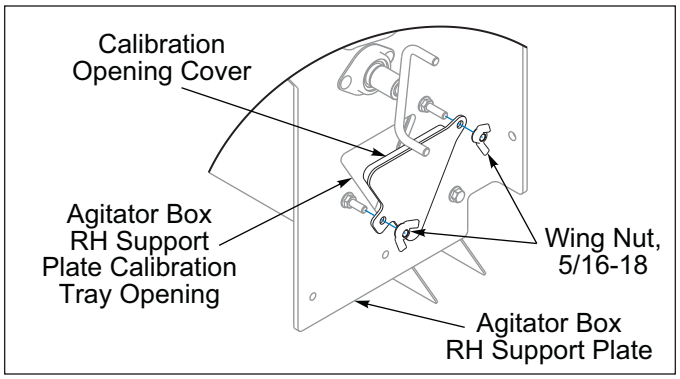

Figure 3-24: Calibration Opening Cover - Agitator Box

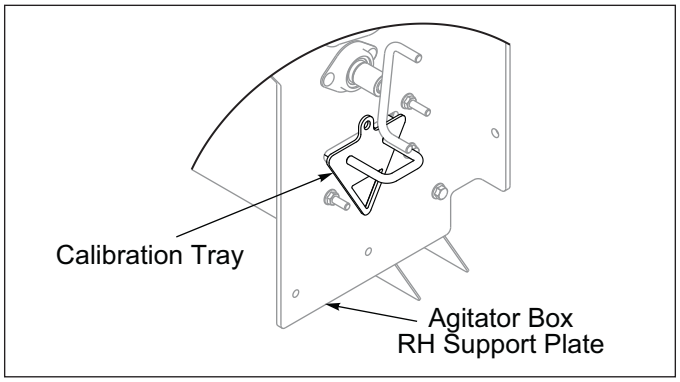

Figure 3-25: Calibration Tray Collection Position - Agitator Box

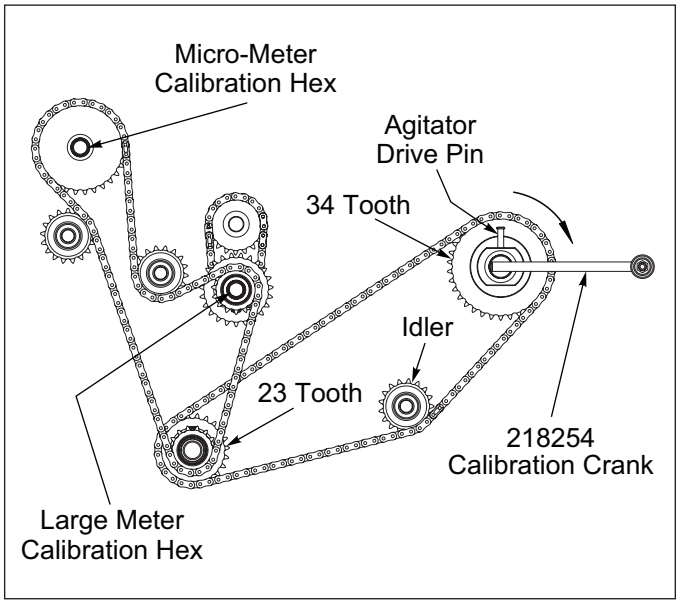

Figure 3-26: Agitator Box Calibration

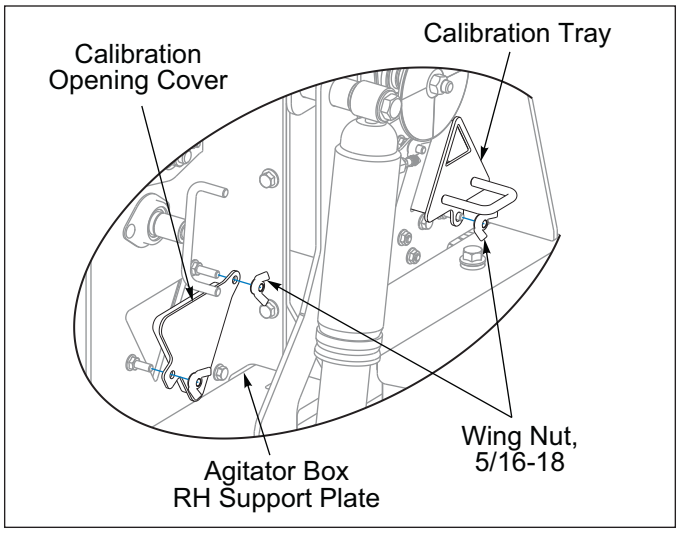

Figure 3-27: Calibration Tray Storage Position - Agitator Box

Agitator Box - Seed Rate Chart

PLANTING RATES FOR BPS8 AGITATOR BOX IN POUNDS PER ACRE

RATES ARE INTENDED AS A GUIDE ONLY. VARIATIONS IN SIZE AND CLEANLINESS WILL AFFECT RATES. CHECK ACREAGE AND POUNDS OF SEED USED FOR BEST RESULTS.

INDICATOR SETTINGS	AGITATOR	1	2	3	4	5	6
BENTGRASS, L-93 CREEPING	BLADE	27	84	166	248	339	461
BLUEGRASS, SHERMAN BIG	BLADE	4	22	57	92	146	198
BLUEGRASS, KENTUCKY - ODYSSEY	BLADE	14	60	114	172	257	364
BLUESTEM, PAWNEE BIG (W/BEARDS)	BLADE	1	3	5	8	12	18
BLUESTEM, WW B. DAHL (W/O BEARDS)	BLADE	1	5	13	26	44	69
BLUESTEM, ITASCA LITTLE (W/O BEARDS)	BLADE	*	1	2	4	7	12
BROME, MEADOW	BLADE	1	5	8	13	22	36
BROME, SMOOTH	BLADE	2	6	13	22	38	63
BUFFALO GRASS	BLADE	3	16	49	83	124	167
BUFFEL GRASS	BLADE	0	1	1	3	4	5
FESCUE, CREEPING RED	BLADE	3	10	25	50	97	148
FESCUE, TALL	BLADE	9	40	86	161	233	319
FESTOLIUM	BLADE	12	33	77	113	211	286
GRAMA, SIDE OATS	BLADE	1	3	7	12	19	29
INDIAN GRASS	BLADE	1	3	5	8	10	14
ORCHARD GRASS (UNHULLED)	BLADE	3	12	29	57	99	159
RYEGRASS	BLADE	20	55	110	169	257	347
RYEGRASS, ITALIAN	BLADE	17	48	130	185	315	404
WHEATGRASS, INTERMEDIATE	BLADE	3	10	23	39	68	101

Note: * Some cracked seeds were observed at this setting

Figure 3-28: Seed Rate Chart - Agitator Box

Electronic Acre Meter Kit - Optional

IMPORTANT

Acre Meter is dust and splash resistant, under no circumstances should this unit be submerged in any conductive, corrosive, or flammable liquid. At no time use high pressure water or air to clean it, as this can damage the unit.

Settings for Loup Acre Meters

The battery operated Acre Meter operates in one of two modes.

1. In sleep mode, the display is blank and the counter is accumulating acres. Sleep mode will be entered if a button is not pressed for 20 seconds.
2. In entry mode, the display is on, and the operator can enter values. To get into entry mode, press the ***/FUNC** button. If you continue to press the ***/FUNC** button, the acre counter will cycle through the functions that it can perform. The LEDs above the display indicate which function is selected.

The available functions are: Field Acres, Total Acres, Pulses per 400 feet, Width, Password and Low Battery **See Figure 3-29.**

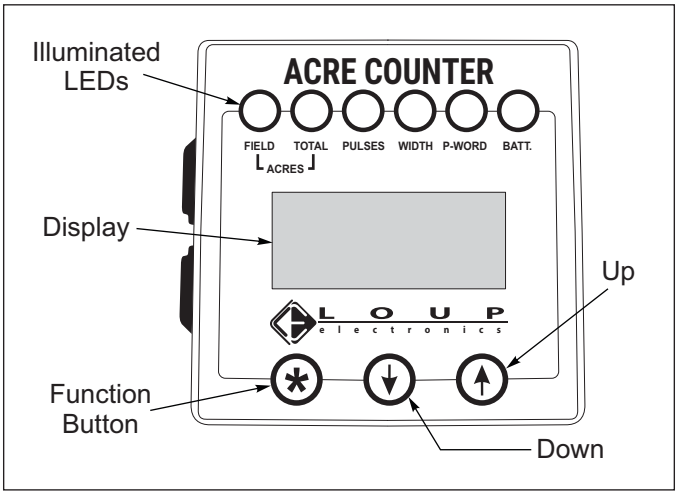

Figure 3-29: Acre Meter

Field Acres

Press the ***/FUNC** button until the "**FIELD**" LED is lit. The digits indicate the acres covered since the field acre counter was cleared.

To clear the field acre count, press the **UP** and **DOWN** buttons simultaneously for two seconds. If a password has been entered, you will not be able to clear the total acre count. Field acres will count in tenths of an acre up to 9999.9 acres.

Total Acres

Press the ***/FUNC** button until the "**TOTAL**" LED is lit. The digits indicate the acres covered since the total acre counter was cleared.

To clear the total acre count, press and hold the **UP** and **DOWN** buttons for two seconds. If a password has been entered, you will not be able to clear the total acre count.

Total acres will count from.1 to 99999 acres.

Pulses Per 400 Feet

Press the ***/FUNC** button until the "**PULSES**" LED is lit. The number in the display indicates how many pulses are generated for every 400 feet driven. There are two methods to enter the pulses per 400 feet:

1. If you know the number, select it using the **UP** and **DOWN** buttons. When you press the ***/FUNC** button, the Acre Counter will accept the number in the display as the new pulses per 400 feet. **See Table 3-31.**.
2. If you Do not know the pulses per 400 feet, press and hold the **UP** and **DOWN** buttons until the "0" appears in the display. The "**PULSES**" LED will blink. The acre counter is now counting shaft rotations. Enter the cab, lower seeder, engage clutch and drive 400 feet. Press the ***/FUNC** button to wake up the acre counter. The "**PULSES**" LED will light. The number displayed is the pulses per 400 feet. Press the ***/FUNC** button to accept the setting.

If a password is set, you will not be able to adjust the pulses.

Width

Press the ***/FUNC** button until the "WIDTH" LED is lit. The number displayed is the length of your implement in feet.

To adjust the width, press the **UP** and **DOWN** buttons. If a password has been entered, you will not be able to adjust the width.

The width can be adjusted from .1 to 99.9 feet, in tenths of a foot.

Password

The password function allows you to protect the total acre count, pulses per 400 feet, and width settings with a password. This stops anyone from accidentally changing those settings. When the acre counter is shipped, the password is disabled. You can modify the pulses per 400 feet and implement width at any time.

Press the ***/FUNC** button until the "**PASS**" LED is lit. The digits will display the word "**Ent**" or "**dIS**".

If the display shows "**dIS**". The password is disabled. The total acre count, pulses/400 feet, width, and password settings can be adjusted using the **UP** and **DOWN** buttons. The password can also be changed using the **UP** and **DOWN** buttons.

If the display shows "**Ent**": You must enter your password using the **UP** and **DOWN** buttons. When your password is displayed, press the ***/FUNC** button to test the password. If the password is correct, you will be able to change the acre counter settings. The password will be viewable until the acre counter enters sleep mode. When the acre counter is in entry mode again, you will have to re-enter the password to change settings.

If the password is not correct, you will not be able to change the acre counter settings. When the "**PASS**" function is selected again, "**Ent**" will appear in the display.

Changing the Password

Select a new password using the **UP** and **DOWN** buttons. Press the ***/FUNC** button until the word "**SEt**" appears in the display. Release the ***/FUNC** button. The number in the display is your new pass code. Make sure you record this number. Press and hold the ***/FUNC** button until the word "**dIS**" appears in the display.

If the password is forgotten, it can be disabled by removing the batteries. The password is intended for rental units. It is recommended that a seal be affixed to the rear plate of the acre counter to determine if the settings have been tampered with.

Battery Replacement

The battery operated acre counter uses 3 AA batteries. The "**BATT**" LED will light when the batteries require replacement. Remove the acre counter from the implement and undo the 4 screws on the back of the case. **See Figure 3-30.** This will separate the housing from the rear plate. Replace the batteries with 3 high quality AA alkaline batteries.

See "Acre Meter Troubleshooting" on page 5-10.

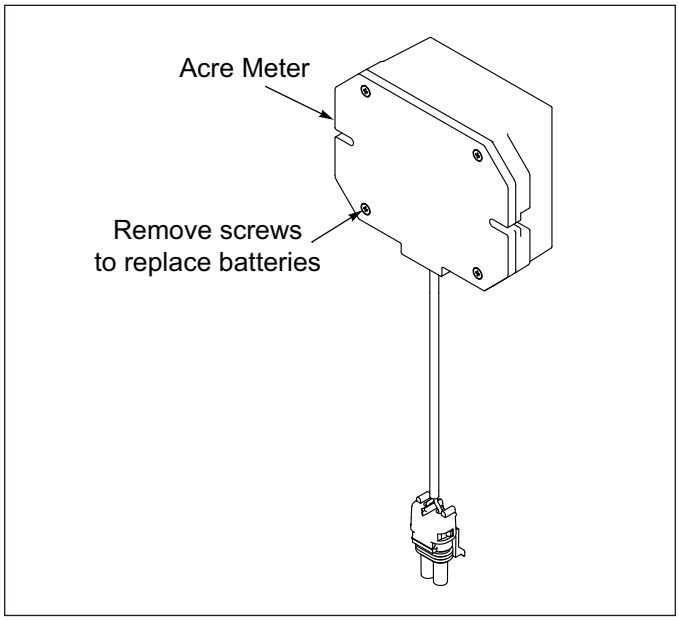

Figure 3-30: Battery Replacement

MODEL				Pulses per 400 Ft	Width (Feet)
SSPT604				22	5.0
SSP4	SS4			44	4.0
SSP5				44	5.0
SSP6				44	6.0
SSP8	SSBP8	SS8	SSB8	58	8.0
SSP10	SSBP10	SS10	SSB10	58	10.0
SSP12	SSBP12	SS12	SSB12	58	12.0
SSP16		SS16		45	16.0
SSP108	SS108			58	8.0
SSP110	SS110			58	10.0
SSP112	SS112			58	12.0
SSP208/2081	SS208/2081			58	8.0
SSP210/2101	SS210/2101			58	10.0
SSP212/2121	SS212/2121			58	12.0
SSP308/3081	SS308/3081			29	8.0
SSP310/3101	SS310/3101			29	10.0
SSP312/3121	SS312/3121			29	12.0
SLP8	SL8			314	8.0
SLP10	SL10			314	10.0
SLP12	SL12			314	12.0
SLP204/2041	SLPB204/2041			128	4.0
SLP206/2061	SLPB206/2061			128	6.0
SLP304/3041	SLPB304/3041			64	4.0
SLP306/3061	SLPB306/3061			64	6.0
LSP5				128	5.0
LSP6				128	6.0
LSS6				128	6.0
SLP208/2081	SLPB208/2081	SL208/2081	SLB208/2081	116	8.0
SLP210/2101	SLPB210/2101	SL210/2101	SLB210/2101	116	10.0
SLP212/2121	SLPB212/2121	SL212/2121	SLB212/2121	116	12.0
SLP308/3081	SLPB308/3081	SL308/3081	SLB308/3081	58	8.0
SLP310/3101	SLPB310/3101	SL310/3101	SLB310/3101	58	10.0
SLP312/2121	SLPB312/3121	SL312/3121	SLB312/3121	58	12.0
BOS4F1	BOS4S1	BOSB4F1	BOSB4S1	45	4.0
BOS6F1	BOS6S1	BOSB6F1	BOSB6S1	45	6.0
BPS6	BPSB6			51	6.0
GLP643	SSLP643			69	5.0
4620-24				45	24.0
4630-36				per Seeder	36.0
X19-27	XL28-36	XXL38-46		90	per Model

Figure 3-31: Acre Meter Quick Setting Chart

General Operation

1. The Till 'N Seed minimum horsepower requirement is based on Hitch Style. This will vary widely due to speed, Tillage Rotor depth, existing vegetation, and types of soil. Local dealers can help in making recommendations for your areas.

   Drawbar Models: 45 horsepower

   3-PT Hitch Models: 75 horsepower
2. 3-PT Hitch Models Minimum Hitch capacity is 5,000 lbs, tractor must be sized accordingly. **Refer to Tractor Operator's Manual.**
3. Operating speed is between 4 to 8 mph. Speed needs to be fast enough to create enough tillage action to mix the seed into the soil without disturbing vegetation already in place while self-cleaning the rotors. Reduce speed in rocky conditions to prevent Rotor Blade breakage.

Transporting the Till 'N Seed

1. Check and follow all federal, state, and local requirements before transporting the Till 'N Seed.
2. The Till 'N Seed should be transported only by tractor required for field operation. The implement weight should not exceed more than 1.5 times the tractor weight. Maximum transport speed for the Till 'N Seed is 20 mph.

CAUTION

Excessive speed may result in loss of control of the tractor and implement, reduced braking ability, or failure of the implement tire or structure. Do not exceed the implement maximum specified ground speed regardless of the capability of the maximum tractor speed.

3. When towing equipment in combination, the maximum equipment ground speed shall be limited to the lowest specified ground speed of any of the towed implements.

   Maximum transport speed shall be the lesser of travel speed specified in the operator's manual, speed identification symbol, information sign of towed equipment, or limit of road conditions.
4. Slow down when driving on rough roads. Reduce speed when turning, or on curves and slopes to avoid tipping. Equipment altered other than the place of manufacture may reduce the maximum transport speed. Additional weight, added tanks, harrowing attachments, etc. may reduce implement load carrying capabilities.
5. A Safety Chain is provided with the implement to ensure safe transport.
   - The Safety Chain should have a tensile strength equal to or greater than the gross weight of the implement. The chain is attached to the lower Hitch Clevis hole with two Flat Washers between the Clamp Plates to assure a tight connection. Always use a 1" diameter Grade 5 or 8 bolt for this connection.
   - Attach the Safety Chain to the tractor drawbar. **See Figure 1-2.** Provide only enough slack in the chain for turning. Do not use an intermediate chain support as the attaching point for the chain on the tractor. Do not pull the implement by the Safety Chain.
   - When unhitching from the tractor attach the hook end of the chain to a free link close to the hitch clevis for storage. This will keep the hook off the ground, reducing corrosion, and keep the hook functioning properly.
   - Regularly inspect the safety chain for worn, stretched, or broken links and ends. Replace the Safety Chain if it is damaged or deformed in any way.
6. Before transporting:
   - Know the height and width of the implement being towed. Markers, tanks, attachments, etc. can increase the height and width of the implement.

DANGER

Stay away from power lines when transporting, extending implement. Electrocution can occur without direct contact.

   - Check to see that the tractor hitch capacity is rated to carry the weight of the Seeder Hitch. **Refer to Tractor Operator's Manual.**
   - Use provided pins that properly fits the Lift Arms or Quick Hitch and Implement Hitch.
   - Clean all Hydraulic Couplings and attach to tractor remotes.
   - Connect the Safety Warning Lights 7-Pin Plug into tractor 7-Pin outlet, routing cord by avoiding pinch points.
   - Fully raise the Till 'N Seed Hydraulic Lift or 3-PT Hitch.
   - Make sure Transport Locks are installed and secured with Clevis Pins and Hair Pin Cotters. **See Figure 3-4.**

WARNING

Failure to use Transport Locks during transport may result in permanent equipment damage, serious injury, or death.

- Check all tires for proper inflation, and that lug nuts are properly torque. **See "Tires" on page 4-3.**
- Verify that all warnings lights, SMV sign, reflectors, and safety decals are clearly visible and functioning properly.
- Raise the implement parking stands if applicable.
- Transport during daylight hours whenever possible. Always use flashing warning lights, except where such use is prohibited by law. Make sure lights, reflectors and SMV emblem are clearly visible and operating. Remove any obstructions such as dirt, mud, stalks or residue that restricts view before transporting. **See Figure 3-32.**

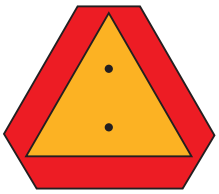

Figure 3-32: SMV Sign

General Torque Specifications

(rev. 4/97)

This chart provides tightening torques for general purpose applications when special torques are not specified on process or drawing. Assembly torques apply to plated nuts and capscrews assembled without supplemental lubrication (as received condition). They do not apply if special graphite moly-disulfide or other extreme pressure lubricants are used. When fasteners are dry (solvent cleaned) add 33% to as received condition torque. Bolt head identification marks indicate grade and may vary from manufacturer to manufacturer. Thick nuts must be used on grade 8 capscrews. Use value in [ ] if using prevailing torque nuts.

TORQUE SPECIFIED IN FOOT POUNDS

UNF SIZE	SAE Grade 2	SAE Grade 5	SAE Grade 8	UNF SIZE	SAE Grade 2	SAE Grade 5	SAE Grade 8
1/4-20	4 [5]	6 [7]	9 [11]	1/4-28	5 [6]	7 [9]	10 [12]
5/16-18	8 [10]	13 [13]	18 [22]	5/16-24	9 [11]	14 [17]	20 [25]
3/8-16	15 [19]	23 [29]	35 [42]	3/8-24	17 [21]	25 [31]	35 [44]
7/16-14	24 [30]	35 [43]	55 [62]	7/16-20	27 [34]	40 [50]	60 [75]
1/2-13	35 [43]	55 [62]	80 [100]	1/2-20	40 [50]	65 [81]	90 [112]
9/16-12	55 [62]	80 [100]	110 [137]	9/16-18	60 [75]	90 [112]	130 [162]
5/8-11	75 [94]	110 [137]	170 [212]	5/8-18	85 [106]	130 [162]	180 [225]
3/4/10	130 [162]	200 [250]	280 [350]	3/4-16	150 [188]	220 [275]	320 [400]
7/8-9	125 [156]	320 [400]	460 [575]	7/8-14	140 [175]	360 [450]	500 [625]
1-8	190 [237]	408 [506]	680 [850]	1-14	210 [263]	540 [675]	760 [950]
1-1/8-7	270 [337]	600 [750]	960 [1200]	1-1/8-12	300 [375]	660 [825]	1080 [1350]
1-1/4-7	380 [475]	840 [1050	1426 [1782]	1-1/4-12	420 [525]	920 [1150]	1500 [1875]
1-3/8-6	490 [612]	1010 [1375]	1780 [2225]	1-3/8-12	560 [700]	1260[1575]	2010 [2512]
1-1/2-6	650 [812]	1460 [1825]	2360 [2950]	1-1/2-12	730 [912]	1640[2050]	2660 [3325]

METRIC:

Coarse thread metric class 10.9 fasteners and class 10.0 nuts and through hardened flat washers, phosphate coated, Rockwell “C” 38-45. Use value in [ ] if using prevailing torque nuts.

Nominal thread diameter (mm)	Newton Meters (Standard Torque)	Foot Pounds (Standard Torque)	Nominal Thread Diameter (mm)	Newton Meters (Standard Torque)	Foot Pounds (Standard Torque)
6	10 [14]	7 [10]	20	385 [450]	290 [335]
7	16 [22]	12 [16]	24	670 [775]	500 [625]
8	23 [32]	17 [24]	27	980 [1105]	730 [825]
10	46 [60]	34 [47]	30	1330 [1470]	990 [1090]
12	80 [125]	60 [75]	33	1790 [1950]	1340 [1450]
14	125 [155]	90 [115]	36	2325 [2515]	1730 [1870]
16	200 [240]	150 [180]	39	3010 [3210]	2240 [2380]
18	275 [330]	205 [245]			

Hydraulic Fitting Torque Specifications

37 degree JIC, ORS, &ORB (REV. 10/97)

This chart provides tightening torques for general purpose applications when special torques are not specified on process or drawing. Assembly torques apply to plated nuts and capscrews assembled without supplemental lubrication (as received condition). They do not apply if special graphite moly-disulfide or other extreme pressure lubricants are used. When fasteners are dry (solvent cleaned) add 33% to as received condition torque. Bolt head identification marks indicate grade and may vary from manufacturer to manufacturer. Thick nuts must be used on grade 8 capscrews. Use value in [ ] if using prevailing torque nuts.

TORQUE SPECIFIED IN FOOT POUNDS

PARKER® BRAND FITTINGS

Dash Size	37 Deg. JIC	O-ring (ORS)	O-ring boss
-4	11-13	15-17	13-15
-5	14-16	----------	21-23
-6	20-22	34-36	25-29
-8	43-47	58-62	40-44
-10	55-65	100-110	58-62
-12	80-90	134-146	75-85
-16	115-125	202-218	109-121
-20	160-180	248-272	213-237
-24	185-215	303-327	238-262
-32	250-290	----------	310-340

AEROQUIP® BRAND FITTINGS

Dash Size	37 Deg. JIC	O-ring (ORS)	O-ring boss
-4	11-12	10-12	14-16
-5	15-16	----------	16-20
-6	18-20	18-20	24-26
-8	38-42	32-35	50-60
-10	57-62	46-50	75-80
-12	79-87	65-70	125-135
-14	----------	----------	160-180
-16	108-113	92-100	200-220
-20	127-133	125-140	210-280
-24	158-167	150-165	270-360

GATES® BRAND FITTINGS

Dash Size	37 Deg. JIC	O-ring (ORS)	O-ring boss
-4	10-11	10-12	14-16
-5	13-15	----------	----------
-6	17-19	18-20	24-26
-8	34-38	32-40	37-44
-10	50-56	46-56	50-60
-12	70-78	65-80	75-83
-14	----------	65-80	----------
-16	94-104	92-105	111-125
-20	124-138	125-140	133-152
-24	156-173	150-180	156-184
-32	219-243	----------	----------

Valve Torque Values		
Part Number	**Description**	**Torque (Ft-Lbs)**
175159	Relief	24-26
171000	Shutoff	19-21

Fasteners

Before operating your Brillion machine, check all hardware for tightness. Use the Tightening Torque Table as a guide. **See Page 4-1.**

After a few hours of use, check entire machine and tighten any loose nuts or bolts. Daily or periodic checks should be made thereafter.

When replacing bolts, be sure to use fasteners of equal grade.

Tires

Recommended Lift Tire Size: 9.5L-15, 8 Ply Rating

Lift Tire Inflation Pressure: 44 PSI

When Re-Installing the 1/2-20 x 1 Wheel Bolts tighten to 50 Ft-Lbs. using the sequence in **Figure 4-1.** Then tighten to full torque of 80-85 Ft-Lbs.

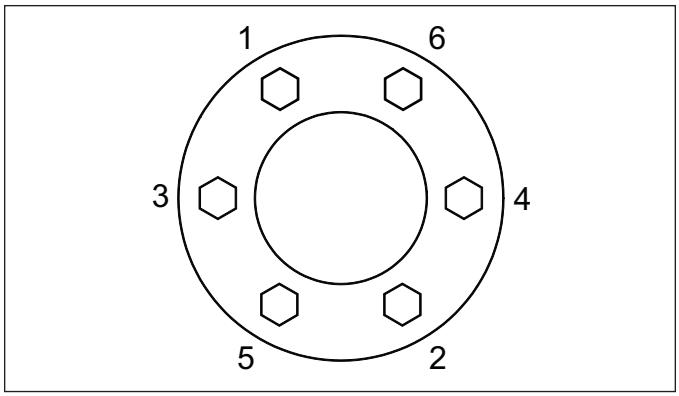

Figure 4-1: Tightening Sequence for 6-Bolt

Recommended Gauge Wheel Tire Size: 4.80 x 12 - LRC Bias Trailer Tire

Gauge Wheel Tire Inflation Pressure: 90 PSI

When Re-Installing the 1/2-20 x 1 Wheel Bolts tighten to 50 Ft-Lbs. using the sequence in **Figure 4-2.** Then tighten to full torque of 80-85 Ft-Lbs.

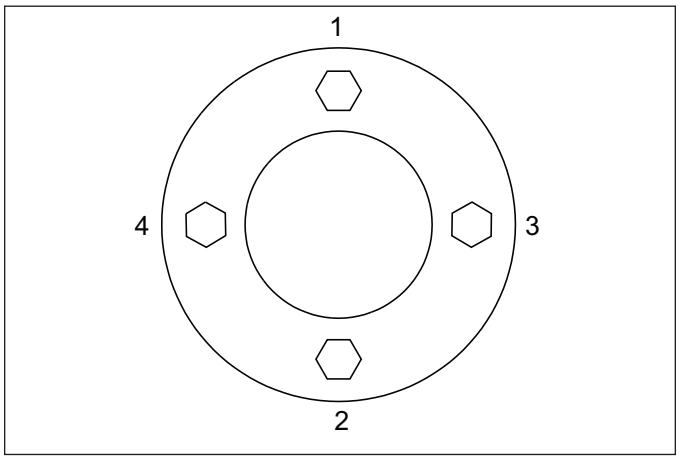

Figure 4-2: Tightening Sequence for 4-Bolt

Wheel Hub Bearing Maintenance

Wheel Bearing maintenance should be performed at the beginning of every season of use. Check the Wheel Bearings periodically for excessive end play. If needed, adjust or replace them using the following procedure:

1. Place the Frame on blocks or stands sufficient to lift the Tire clear of the ground.
2. Remove the Tire.
3. Remove the Hub Cap, Cotter Pin, Slotted Nut and Washer.
4. Remove the Hub. Clean and inspect the Bearings and Hub Cavity. Replace any worn or defective parts.
5. Repack the Bearings using a high-quality Wheel Bearing Grease.
6. Install the inner bearing into the hub and install the grease seal. Use a driver to install the seal, to avoid damaging the outer edge of the seal. Drive the seal squarely into the hub to avoid any seal distortion.

NOTE

The Seal Lip should point away from the Hub to keep contaminants out and allow grease to pass.

7. Slide the hub, bearing, and seal onto a clean spindle.
8. Install the Outer Bearing Cone, Washer and Slotted Nut.
9. Tighten the Slotted Nut while rotating the Hub until there is a slight resistance to wheel rotation. Then, back the Slotted Nut off one notch, until the wheel rotates freely without end play.
10. Install a new Cotter Pin and re-install the Hub Cap.

Lubrication

The Till 'N Seed is equipped with maintenance free Bearings. These areas require no lubrication.

- Grease Lift Wheel Hubs and Gauge Wheel Hubs every 50 hrs. **See Figure 4-3.**
- Grease Rockshaft Bearings every 8 hrs. **See Figure 4-3.**
- Oil #80-2 Roller Chain immediately after each use while chain is still warm for best penetration. **See Figure 4-4.**
- Oil #40 and #60 Roller Chains periodically. **See Figure 4-4.**
- When the Machine is not used for some time, exposed portions of the Hydraulic Cylinder Rods must be cleaned and covered with a thick coat of grease to prevent corrosion, which will damage the seals.

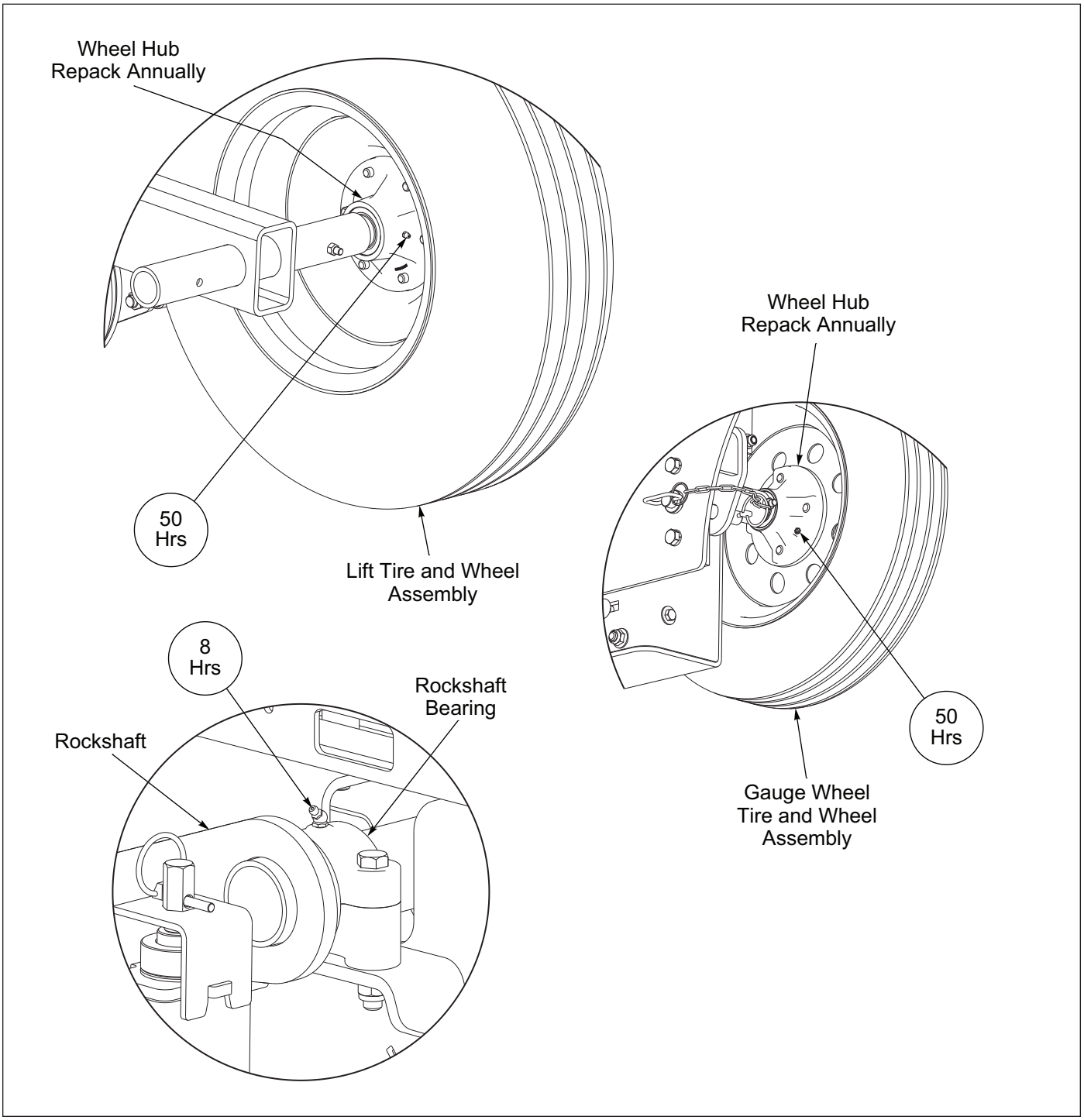

Figure 4-3: Lubrication Maintenance

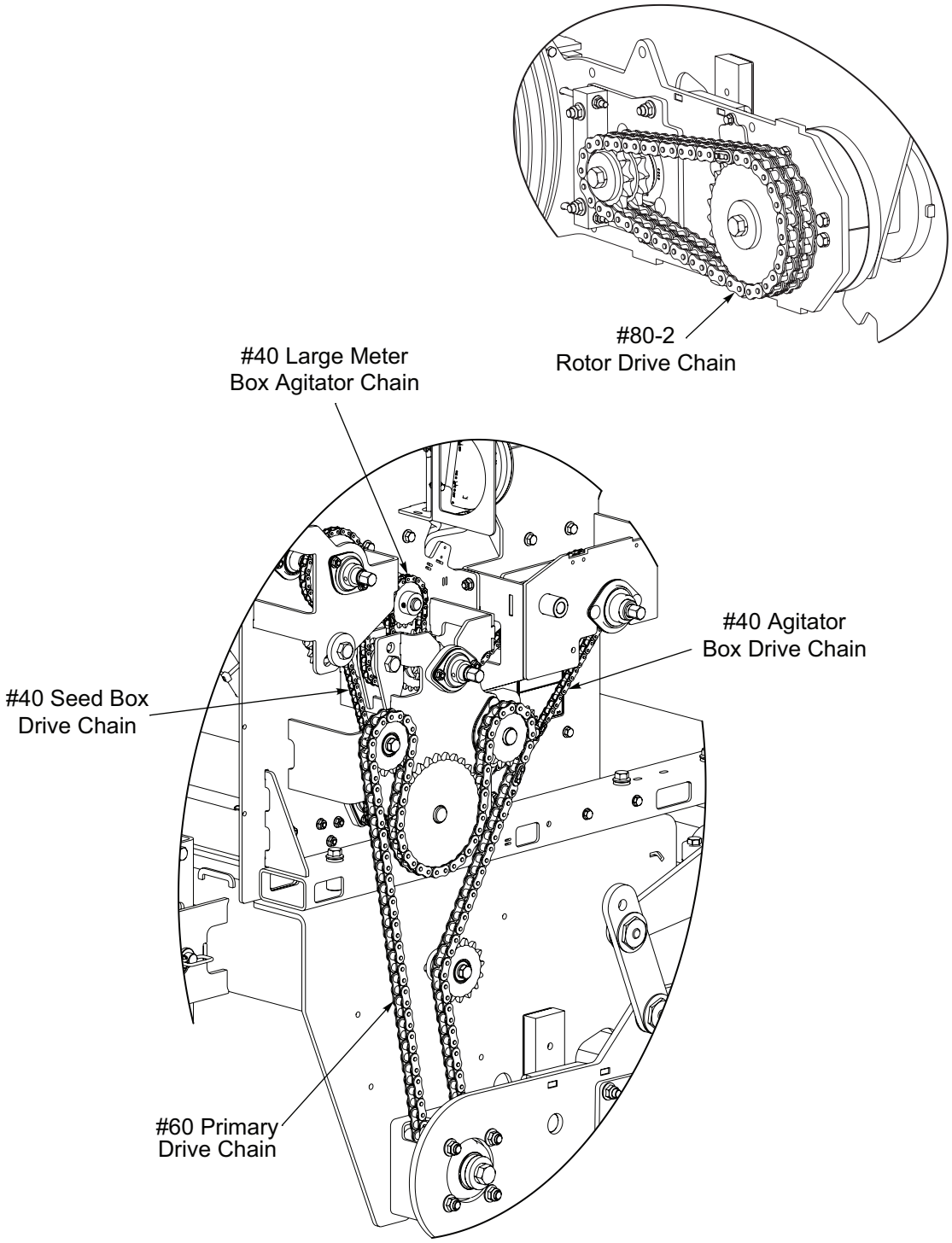

Figure 4-4: Chain Lubrication Maintenance

Hydraulic Maintenance

IMPORTANT

Lower the unit to the ground, and relieve hydraulic pressure before attempting to service any hydraulic component.

WARNING

Escaping hydraulic fluid can cause serious personnel injury. Relieve system pressure before repairing, adjusting, or disconnecting. Wear proper hand and eye protection when searching for leaks. Use cardboard instead of hands (See Figure 4-5.) Keep all components (cylinders, hoses, fittings, etc.) in good repair.

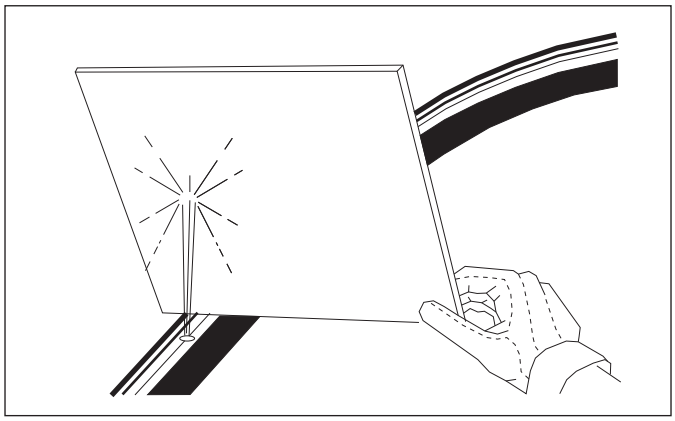

Figure 4-5: Hydraulic Leak Detection

1. Check the tractor hydraulic fluid level per tractor owner's manual and after any leakage. Check fluid level with the cylinders in the retracted position.
2. If a cylinder or valve leaks, disassemble the parts to determine the cause of the leak. Any time a cylinder is opened up, or whenever any seal replacement is necessary, it is advisable to clean all parts and replace all seals. Seal kits are available from your Brillion dealer.
3. Check all hydraulic hoses weekly. Look for binding or cracking. Replace all worn or defective parts immediately.
4. Transport locks are provided to hold the implement in a raised position. **See Figure 3-4.** Do not attempt to perform any service work under the implement without first installing the transport locks. Before servicing any hydraulic component, lower the implement to the ground and relieve all system pressure. If a hydraulic component is disconnected, repaired, or replaced, it will be necessary to purge the system of air before operation. **See "Hydraulic Lift System" on page 3-6.**

Firming Roller

IMPORTANT

Always replace worn or damaged Firming Roller Rubber Press Wheels.

The Firming Roller rotates as one roller. The individual Rubber Press Wheel typically don't rotate independently.

After an initial run of 5-10 hours, check Firming Roller to ensure that on each end of the Firming Roller the Bolts are tight at a full torque of 55 Ft-Lbs. If not tighten the Bolts evenly on both ends to a final torque of 55 Ft-Lbs. Thereafter check Firming Roller annually. **See Figure 4-6.**

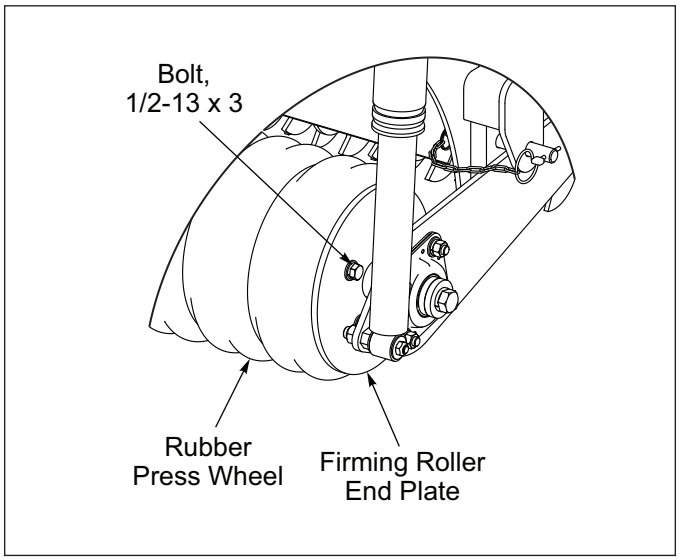

Figure 4-6: Firming Roller Bolts

Check Firming Roller for worn or damaged Rubber Press Wheels and replace. When replacing the Rubber Press Wheels, the distance on both ends from the Firming Roller End Plate to the end of the Firming Roller Shaft should be equal. **See Figure 4-7.**

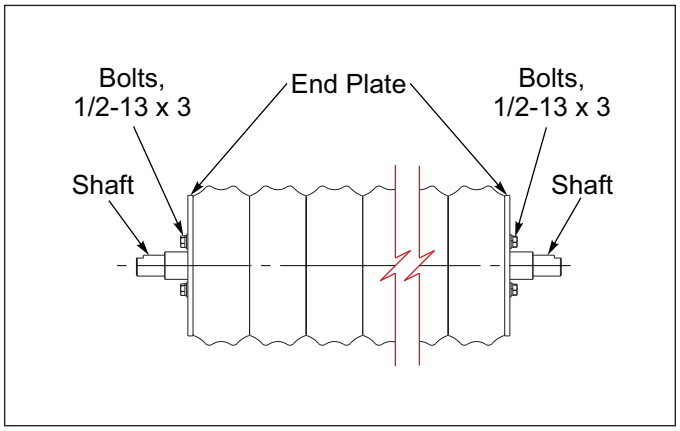

Figure 4-7: Firming Roller Replacement

Drive and Tillage Rotors

IMPORTANT

Always replace worn, broken or bent Rotor Blades.

After an initial run of 5-10 hours, check the Drive and Tillage Rotor Assemblies to ensure that on each end of Rotor Axle the 12-Point Flange Bolts are tight at a full torque of 90 Ft-Lbs. If not, tighten the 12-Point Flange Bolts diagonally to 45 Ft-Lbs then tighten to a full torque of 90 Ft-Lbs. Repeat 90 Ft-Lbs for another 3 to 4 more times (less than 10 percent of wrench movement). Thereafter check Drive and Tillage Rotors every 50-100 hours or annually.

Always clean undesired foreign material that may have wrapped around the Rotors.

Check Rotors for worn, broken or bent Rotor Blades and replace per "**Rotor Blade Replacement Procedure on Page 4-8.**" When replacing Rotor Blades, the distance on both ends from the Blade to the Rotor Axle Shaft Step should be equal. **See Figures 4-8 and 4-9.**

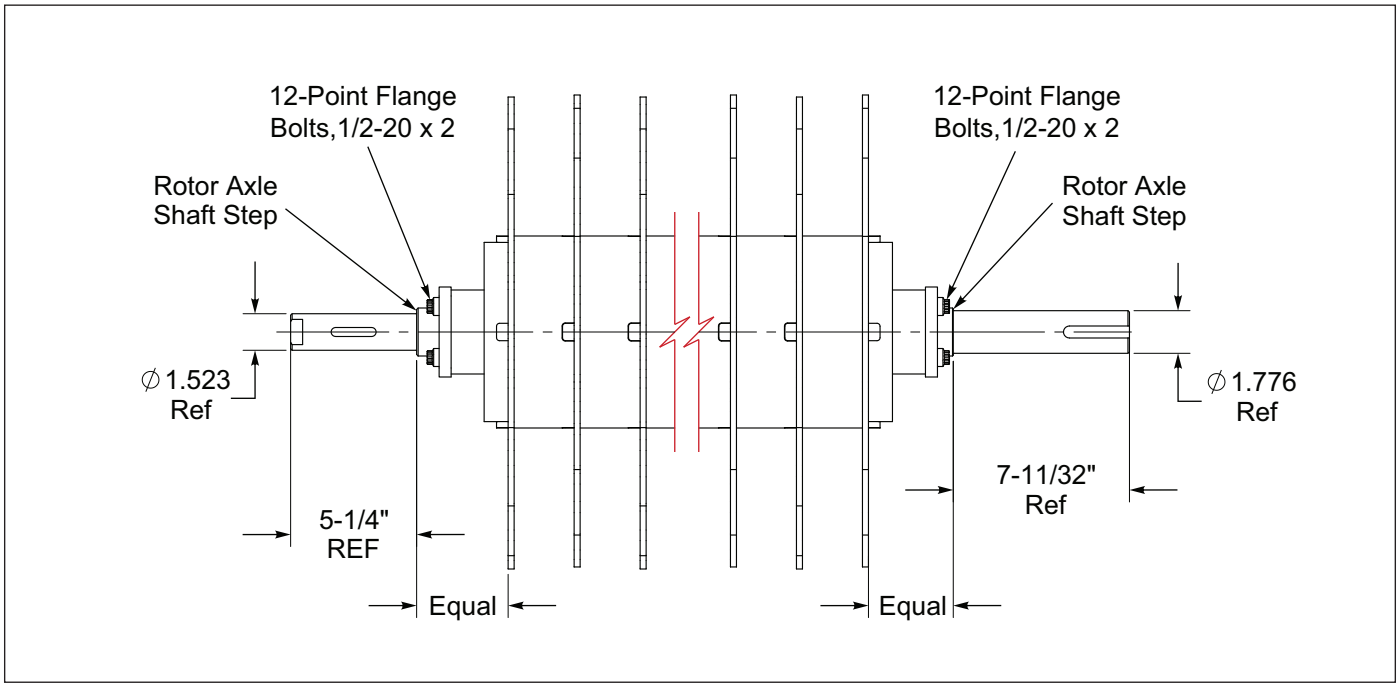

Figure 4-8: Drive Rotor

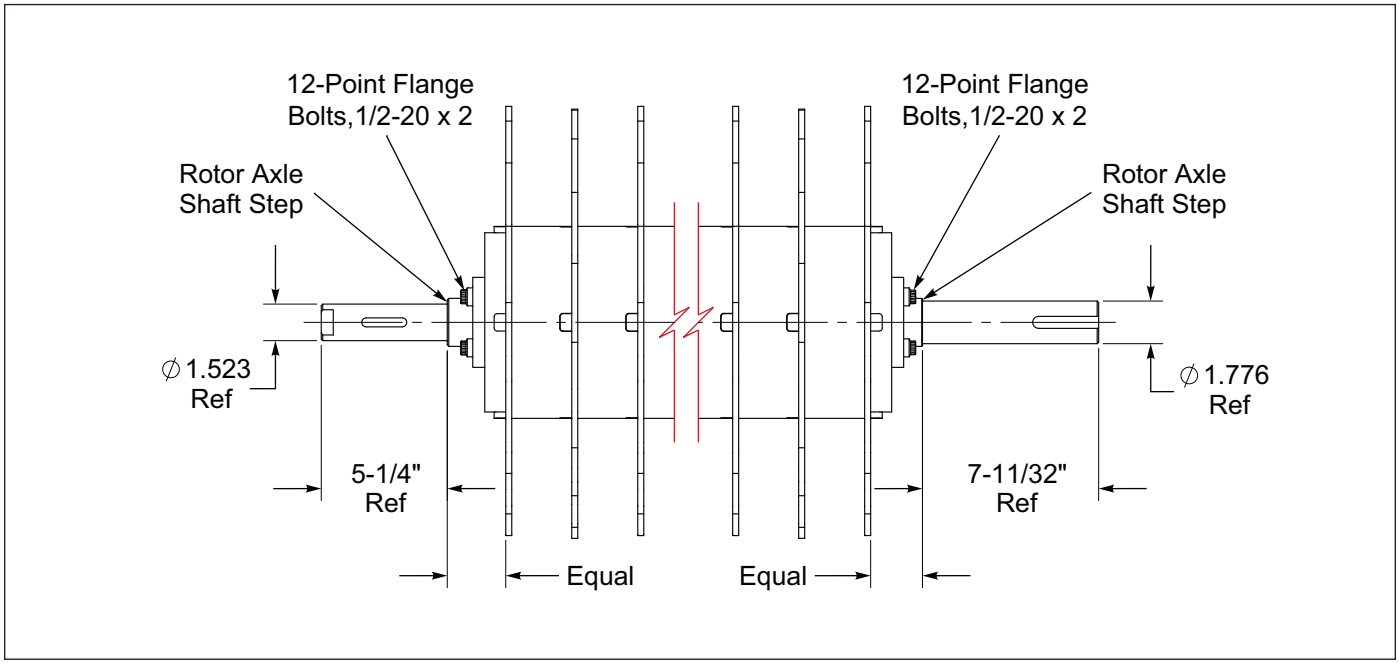

Figure 4-9: Tillage Rotor

Rotor Blade Replacement Procedure

WARNING

If air pressure is not relieved from Tillage Rotor Shocks before servicing unexpected forceful movement will occur.

Drive Rotor

1. Raise Machine. Install Transport Lock if applicable. **See Figure 3-4.**
2. Remove the 3/8-16 x 2-1/2 Bolts and Locknuts that attach the Gauge Wheel Hub and Spindle to the Gauge Wheel Arm. Wheel and Tire Assembly should remain attached to the Hub and Spindle.
3. Relieve air out of the LH and RH Tillage Rotor Shocks and remove Rockshaft Link Bolts that attach to the Swing Arms. The Tillage Rotor Shafts will now rest on the U-Shaped Support Plate. **See Figures 4-10 and 4-11.**
4. Remove Rotor Drive Chain Shield.
5. LH and RH side, relieve #80-2 Drive Chain tension as necessary to remove Drive Chain.
6. Remove RH Drive and Tillage Rotor 3/4-10 x 2 Bolts, Lock Washers, and Thick Washers from the end of the Rotor Shafts.
7. Remove chain access Cover from the RH Swing Arm, #80-2 Drive Chain, Sprockets, 1/2 Keys and 11ga Washers.
8. LH side, open Seed Box Drive Chain Upper Shield and remove the Lower Shield.
9. Remove LH Drive and Tillage Rotor 3/4-10 x 2 Bolts, Lock Washers, Thick Washers and Flat Top Washers from the end of the Rotor Shafts.
10. Remove LH Swing Arm with the #80-2 Chain Take-up and Bearings attached.
11. Remove #60 Seed Box Drive Chain, Drive Sprocket, 3/8 Key, and Chain Shield.
12. RH side, remove RH Swing Arm with the #80-2 Chain Take-up, Bearings and Thrust Bearing attached.
13. Remove Thrust Plate from the Frame End Plate and 3/16 thick Washers from the Drive Rotor Shaft.
14. RH side, support the Drive Rotor with a floor jack. Remove the Bearing from the Frame End Plate.
15. Block the Drive Rotor so that the Drive Rotor drops down approximately 1-1/2" ensuring that the Bearing Shield on the Drive Rotor Shaft is not being damaged during this process. Move the floor jack to the left side to support the Drive Rotor. Remove the Bearing from the Frame End Plate.
16. Lower the Drive Rotor to the ground. Remove the 11ga Washers and Bearing Shields from the Drive Rotor Shafts.

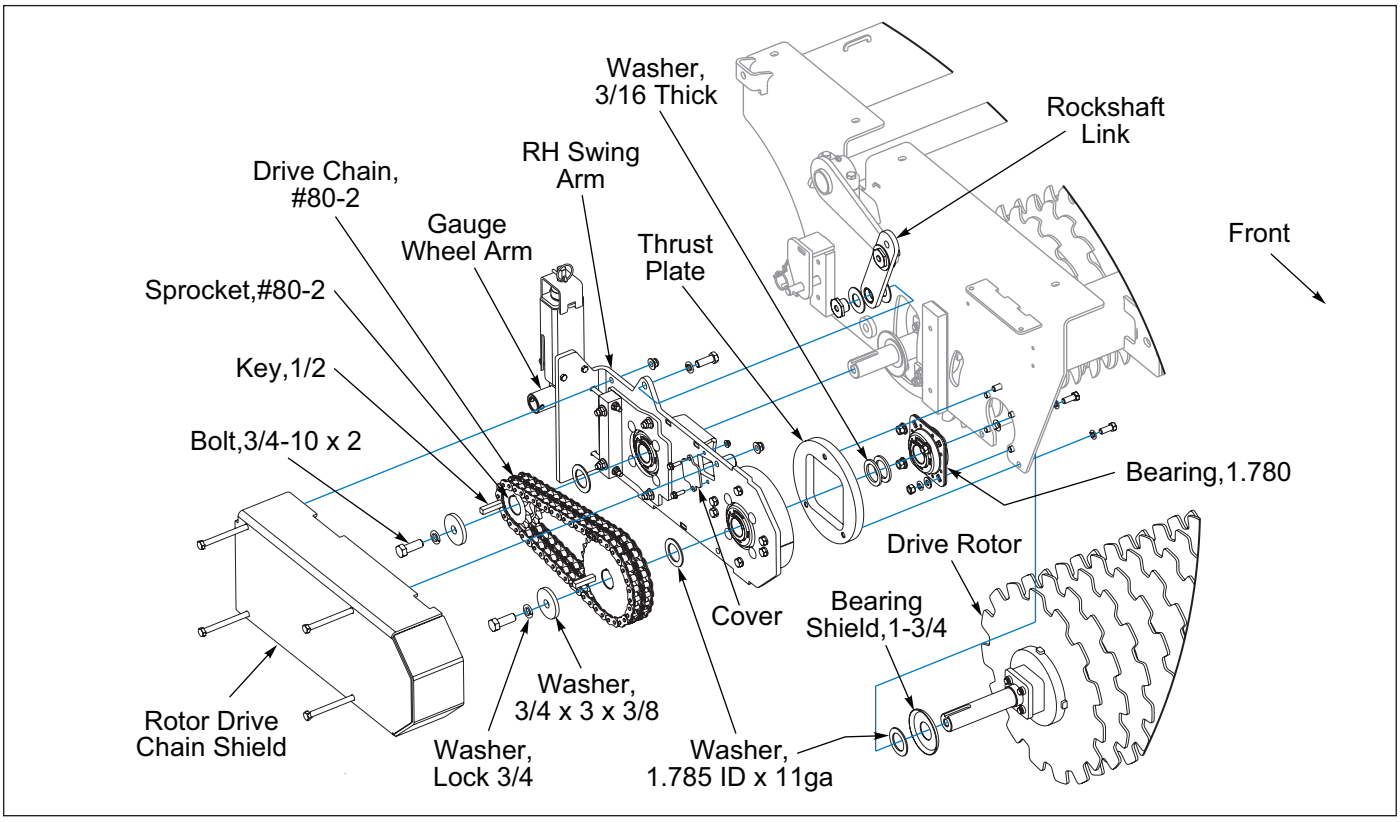

Figure 4-10: Rotor Drive Blade Repair - LH Side

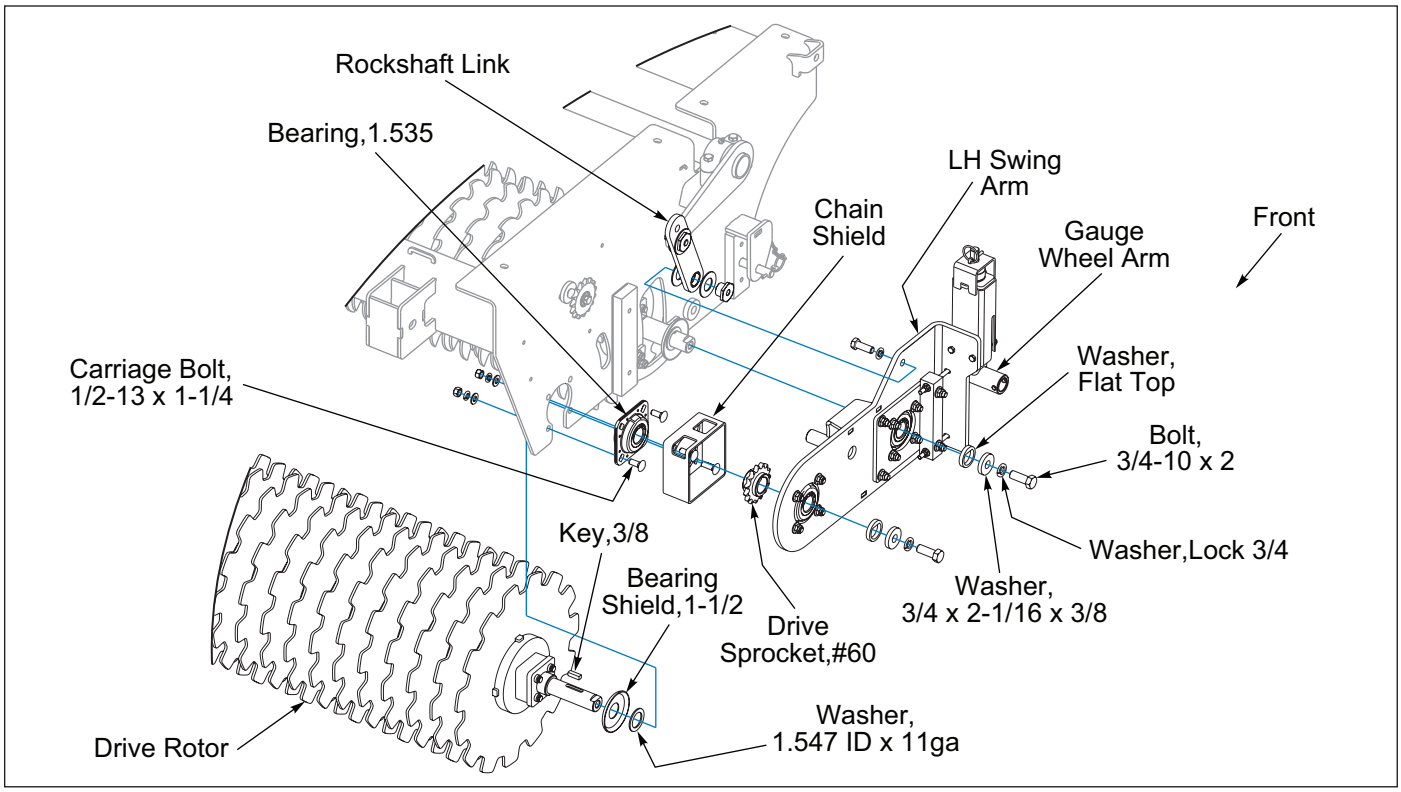

Figure 4-11: Rotor Drive Blade Repair - RH Side

17. Repair Drive Rotor as necessary. **See Figure 4-8.**
18. Re-Assemble Drive Rotor into the Frame. 1.523 Shaft is on the left and 1.776 Shaft is on the right. Orient the Bearing Shield cup outward. Place the appropriate Bearing Shield and 11ga Washer on the Drive Rotor Shafts. **See Figures 4-10 and 4-11.**
19. Raise one end of the Drive Rotor with a floor jack and add a block. Raise the other end of the Drive Rotor and add a block. Continue incrementally in this fashion until the Drive Rotor is positioned inside the frame so that the Bearings can be mounted onto the Frame End Plates. Ensure that the Bearing Shields are inside the frame and were not damaged during this process.
20. Apply anti-seize on the Drive Rotor Shafts. Slide the RH Bearing onto the Rotor Shaft and attach the Bearing to the Frame End Plate. Slide the LH Bearing onto the Rotor Shaft. Attach the Bearing to the Frame End Plate Rear Top Hole and Frame End Plate Front Bottom Hole with 1/2-13 x 1-1/4 Carriage Bolts. Orient the Chain Shield with the cutouts to the top. Assemble the Chain Shield along with the Bearing to the Frame End Plate Front Top Hole and Frame End Plate Rear Bottom Hole with 1/2-13 X 1-1/2 Carriage Bolts. Secure with Flat Washers, Lock Washers and Nuts.
21. Install Seed Box #60 Drive Sprocket and 3/8 Key onto the LH Drive Rotor Shaft.
22. Install Seed Box #60 Drive Chain. Adjust Chain Tension. **See "Chain Tension" on page 4-12.**
23. Install Thrust Plate onto the RH Frame End Plate and place 3/16 Thick Washers onto the Drive Rotor Shaft.
24. Install LH and RH Swing Arms onto Drive Rotor and Tillage Rotor Shafts.
25. RH side, place a 1.785 x 11ga Washer on the Drive and Tillage Rotor Shaft. Install #80-2 Sprockets and 1/2" Keys onto Rotors. Larger Sprocket is on the Drive Rotor.
26. RH side, secure the Drive and Tillage Rotors by installing 3/4-10 x 2 Bolts, Lock Washers, and 3/4 x 3 x 3/8 Washers on the end of the Rotor Shafts.
27. LH side, secure the Drive and Tillage Rotor Shafts by installing 3/4-10 x 2 Bolts, Lock Washers, 3/4 x 2-1/16 x 3/8 Washers, and Flat Top Washers on the end of the Rotor Shafts.
28. Install Rotor #80-2 Drive Chain. Adjust Chain Tension. **See "Chain Tension" on page 4-12.**
29. Install chain access Cover to the RH Swing Arm.
30. Install Rotor Drive Chain Shield.
31. Insert the Gauge Wheel Hub and Spindle into the Gauge Wheel Arm. Secure with 3/8-16 x 2-1/2 Bolts and Locknuts.
32. Attach LH and RH Rockshaft Links to the Swing Arms with 5/8-11 x 1-3/4 Bolts and Lock Washers.
33. Fill LH and RH Tillage Rotor Air Shocks with air. **See "Air Shock" on page 3-6.**

Tillage Rotor

1. Raise Machine. Install Transport Lock if applicable. **See Figure 3-4.**
2. Remove the 3/8-16 x 2-1/2 Bolts and Locknuts that attach the Gauge Wheel Hub and Spindle to the Gauge Wheel Arm. Wheel and Tire Assembly should remain attached to the Hub and Spindle.
3. Relieve air out of the LH and RH Tillage Rotor Shocks and remove Rockshaft Link Bolts that attach to the Swing Arms. The Tillage Rotor Shafts will now rest on the U-Shaped Support Plate. **See Figures 4-12 and 4-13.**
4. Remove Rotor Drive Chain Shield.
5. LH and RH side, relieve #80-2 Drive Chain tension as necessary to remove Drive Chain.
6. Remove RH Drive and Tillage Rotor 3/4-10 x 2 Bolts, Lock Washers, and Thick Washers from the end of the Rotor Shafts.
7. Remove chain access Cover from the RH Swing Arm, #80-2 Drive Chain, Sprockets, 1/2 Keys and 11ga Washers.
8. Remove LH Drive and Tillage Rotor 3/4-10 x 2 Bolts, Lock Washers, Thick Washers and Flat Top Washers from the end of the Rotor Shafts.
9. Remove LH Swing Arm with the #80-2 Chain Take-up and Bearings attached.
10. RH side, remove RH Swing Arm with the #80-2 Chain Take-up, Bearings and Thrust Bearing attached.
11. Support the Tillage Rotor. Remove the U-Shaped Support Plates.
12. Lower the Tillage Rotor to the ground. Remove the 11ga Washers, Bearing Shields, and Spacers from the Tillage Rotor Shafts.
13. Repair Tillage Rotor as necessary. **See Figure 4-9.**
14. Re-Assemble Tillage Rotor into the Frame. 1.523 Shaft is on the left and 1.776 Shaft is on the right. Raise one end of the Tillage Rotor with a floor jack and add a block. Raise the other end of the Tillage Rotor and add a block. Continue incrementally in this fashion until the Tillage Rotor is positioned inside the Frame. Mount the U-Shaped Support Plates under the Tillage Rotor Shafts and onto the Frame End Plates. **See Figures 4-12 and 4-13.** Rest the Tillage Rotor onto the U-shaped Support Plates.

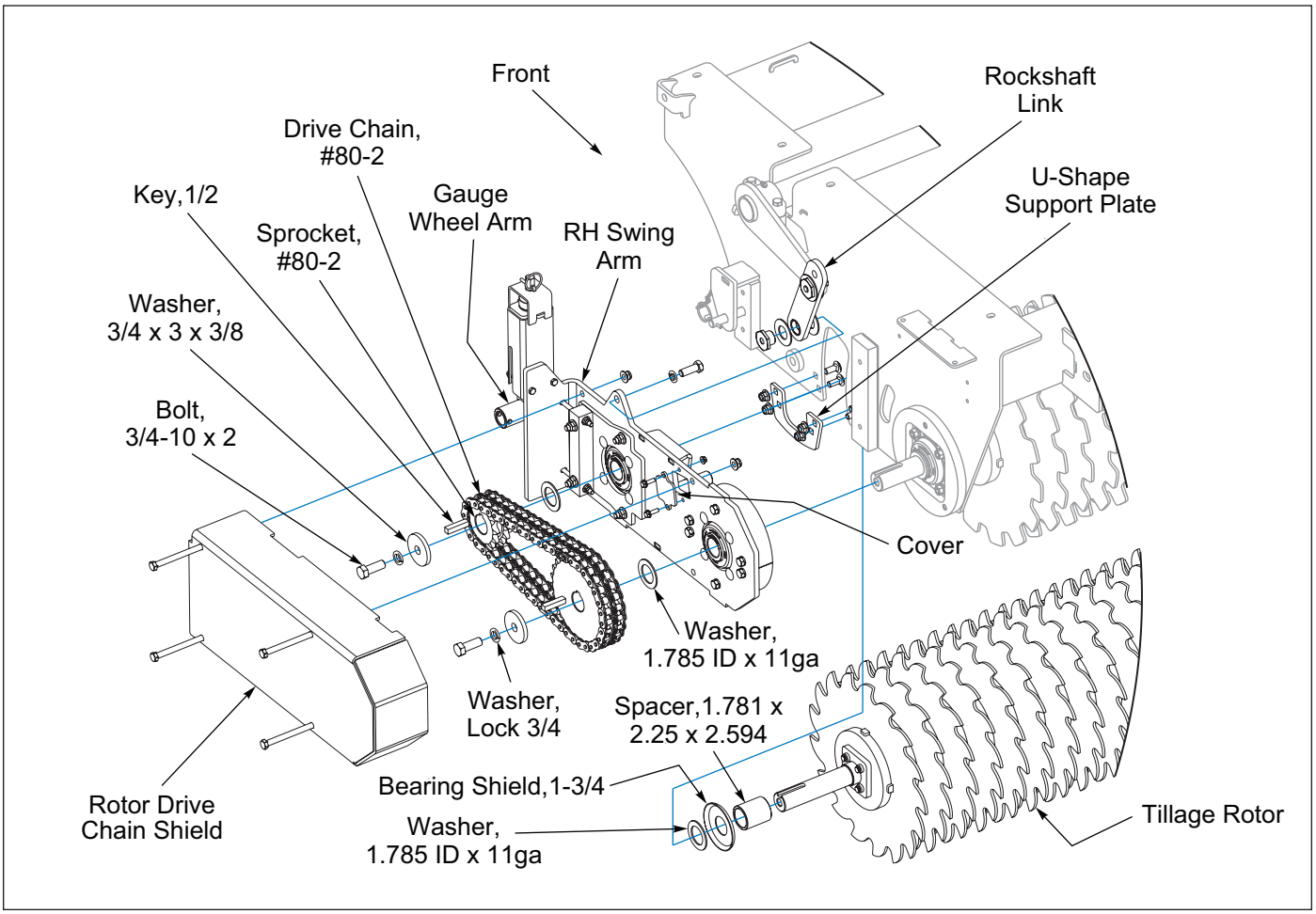

Figure 4-12: Tillage Rotor Blade Repair - LH Side

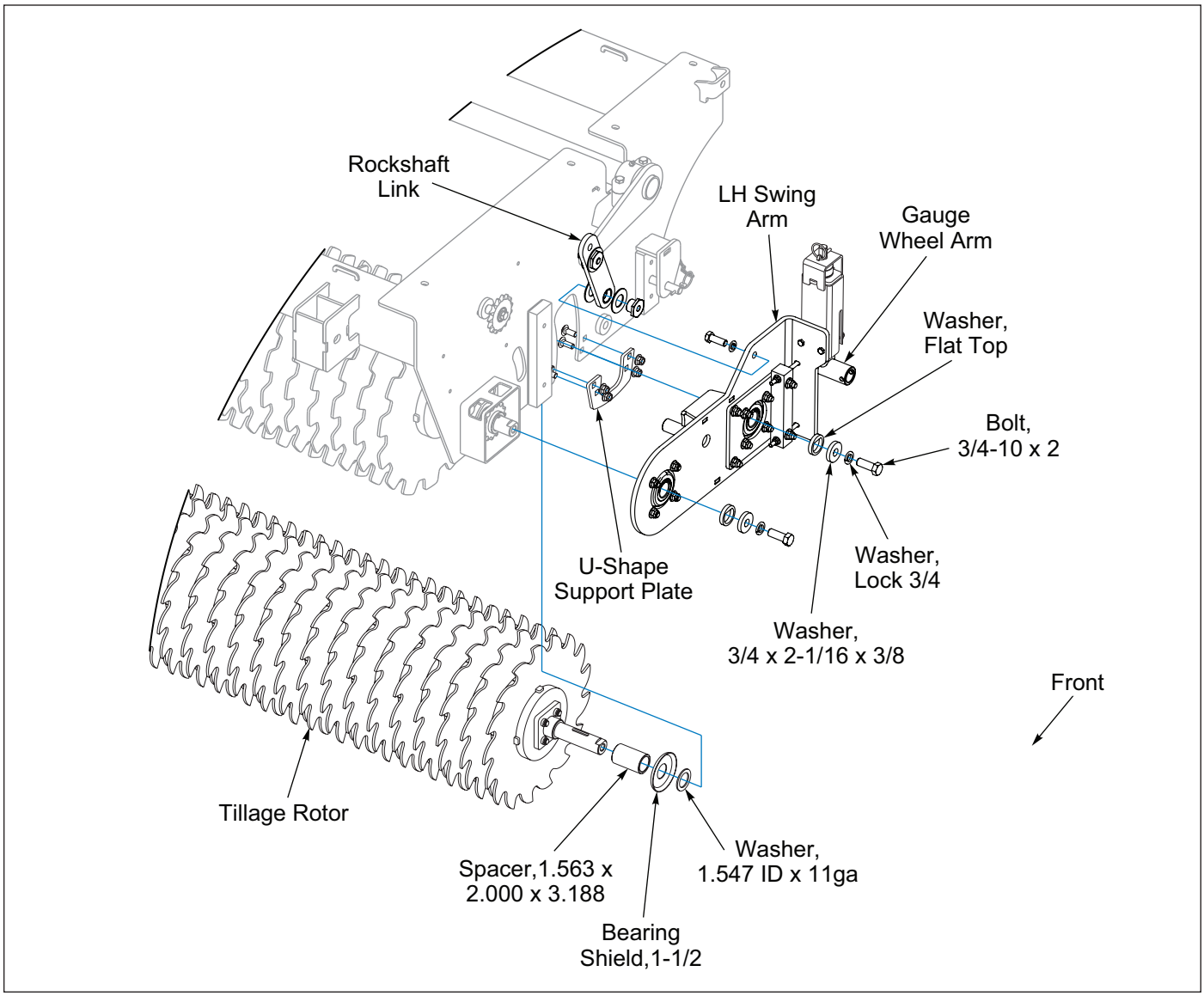

Figure 4-13: Tillage Rotor Blade Repair - RH Side

15. Orient the Bearing Shield cup outward. Place the appropriate Spacer, Bearing Shield, and 11ga Washer on the Tillage Rotor Shafts.
16. Apply anti-seize on the Tillage Rotor Shafts. Install LH and RH Swing Arms onto Drive Rotor and Tillage Rotor Shafts.
17. RH side, place a 1.785 x 11ga Washer on the Drive and Tillage Rotor Shafts. Install #80-2 Sprockets and 1/2" Keys onto Rotors. Larger Sprocket is on the Drive Rotor.
18. RH side, secure the Drive and Tillage Rotors by installing 3/4-10 x 2 Bolts, Lock Washers, and 3/4 x 3 x 3/8 Washers on the end of the Rotor Shafts.
19. LH side, secure the Drive and Tillage Rotor Shafts by installing 3/4-10 x 2 Bolts, Lock Washers, 3/4 x 2-1/16 x 3/8 Washers, and Flat Top Washers on the end of the Rotor Shafts.
20. Install Rotor #80-2 Drive Chain. Adjust Chain Tension. **See "Chain Tension" on page 4-12.**
21. Install chain access Cover to the RH Swing Arm.
22. Install Rotor Drive Chain Shield.
23. Insert the Gauge Wheel Hub and Spindle into the Gauge Wheel Arm with 3/8-16 x 2-1/2 Bolts and Locknuts.
24. Attach LH and RH Rockshaft Links to the Swing Arms with 5/8-11 x 1-3/4 Bolts and Lock Washers.
25. Fill LH and RH Tillage Rotor Air Shocks with air. **See "Air Shock" on page 3-6.**

Chain Tension

The Transmission #40 Seed Meter Boxes Drive Chain and #40 Agitator Box Drive Chain tension should have about 1/8" to 1/4" slack. The #60 Primary Drive Chain tension should have about 3/8" to 1/2" slack. **See Figure 4-15.**

To adjust, loosen the appropriate Tension Idler Hardware and move the Tension Idler until the designated slack is achieved. Retighten the Tension Idler Hardware.

IMPORTANT

Tillage Rotor must be parallel to the Drive Rotor after adjusting the Chain Tension.

The #80-2 Rotor Drive Chain tension should have about 3/16" to 1/4" slack. **See Figure 4-14.**

To adjust, loosen the 1/2-13 Hardware that mounts the Adjuster Plates to the RH and LH Swing Arms. Loosen and back-off the 3/8-16 Nuts. Turn the 3/8-16 Flange Locknuts equally on each side until 3/16" to 1/4" of slack is achieved. Tighten 3/8-16 Nuts. Secure the Adjuster Plates to the RH and LH Swing Arms by retightening the 1/2-13 Hardware. *It is important that the Tillage Rotor remains parallel to the Drive Rotor after adjusting the Chain Tension.*

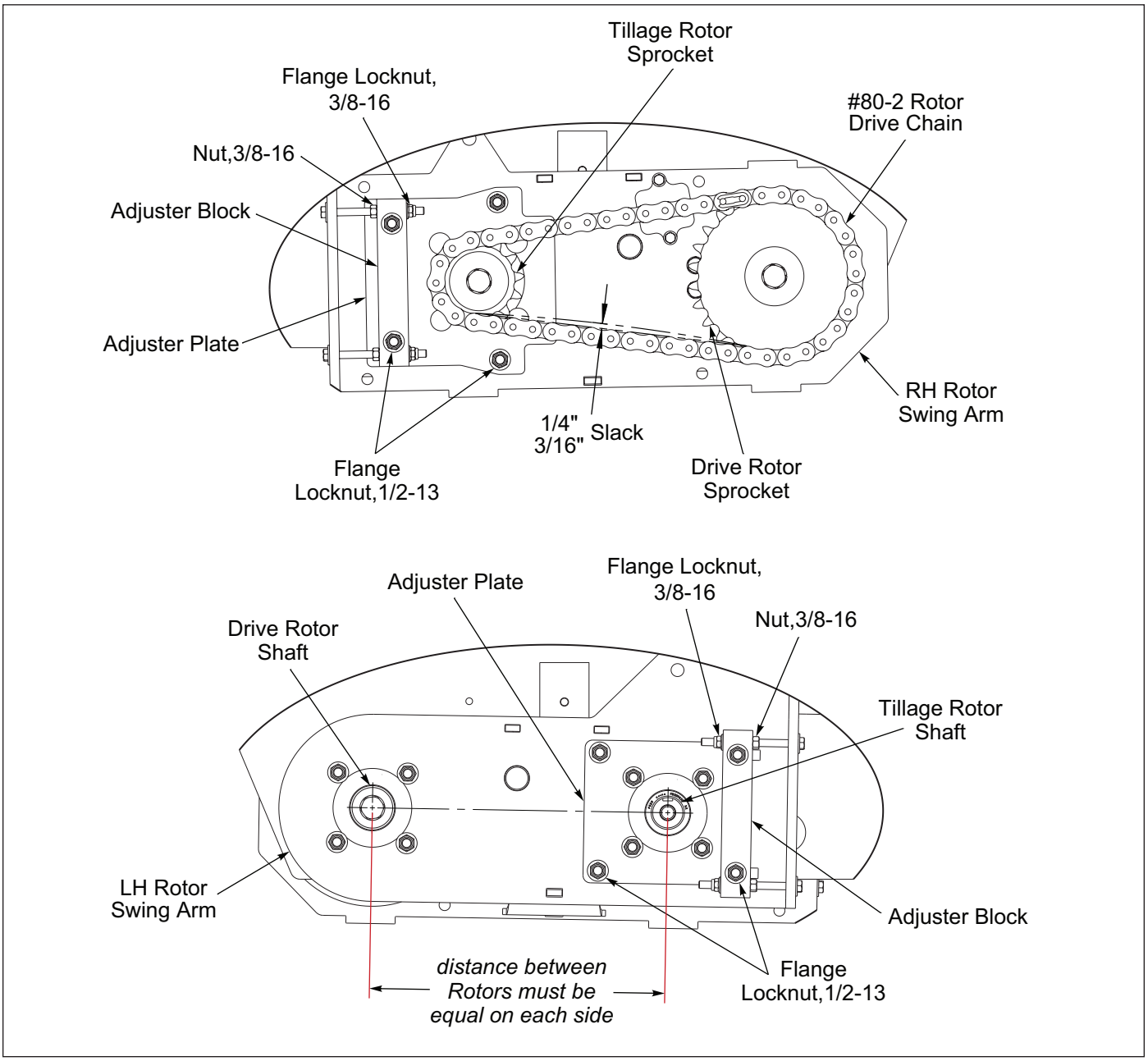

Figure 4-14: Chain Tension - #80-2

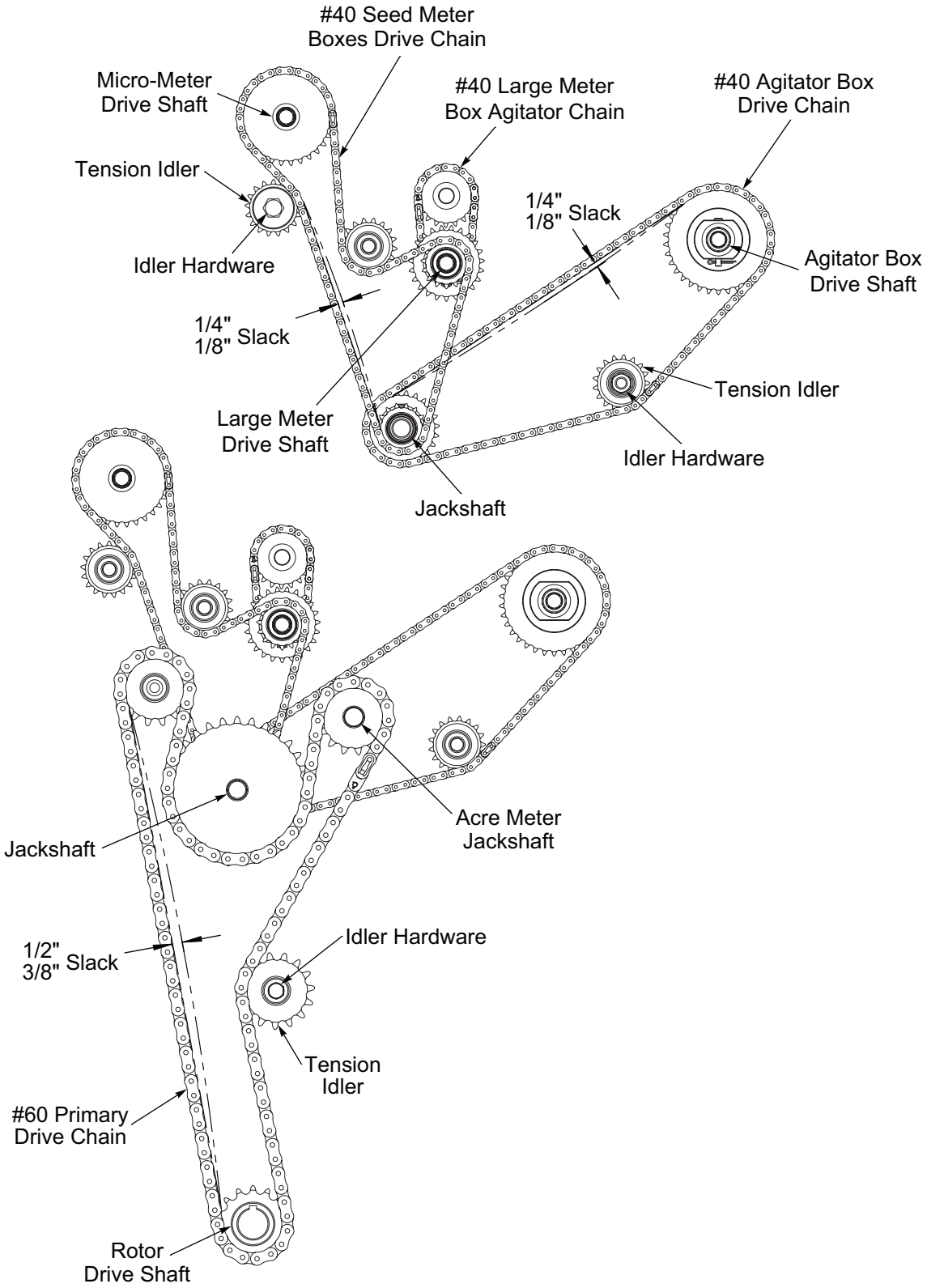

Figure 4-15: Chain Tension - #40 and #60

Seed Meter Adjustment

IMPORTANT

All the Seed Meters MUST BE CLOSED! It may be necessary to individually adjust Seed Meter Cups.

All Seed Meters must be set the same to ensure uniform seeding. To check, set the Seed Rate Adjusting Nut to 0-A. The “A” on the Seed Rate Adjusting Nut is positioned over the “0” (the nut covers half of the “0”) and snug against the Bearing. **See Figures 4-16 and 4-17.**

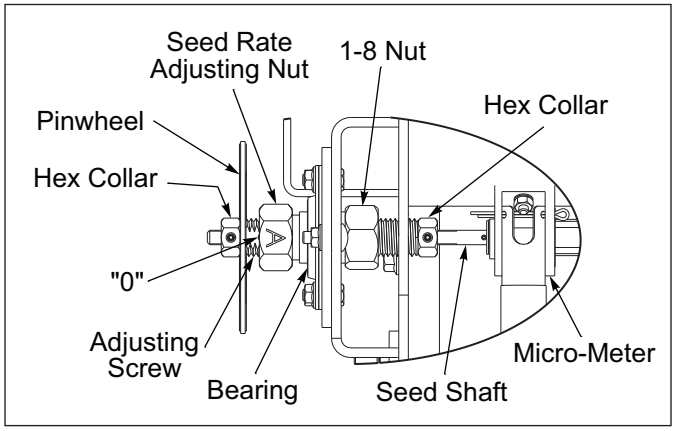

Figure 4-16: Micro-Meter Seed Box Rate Adjuster

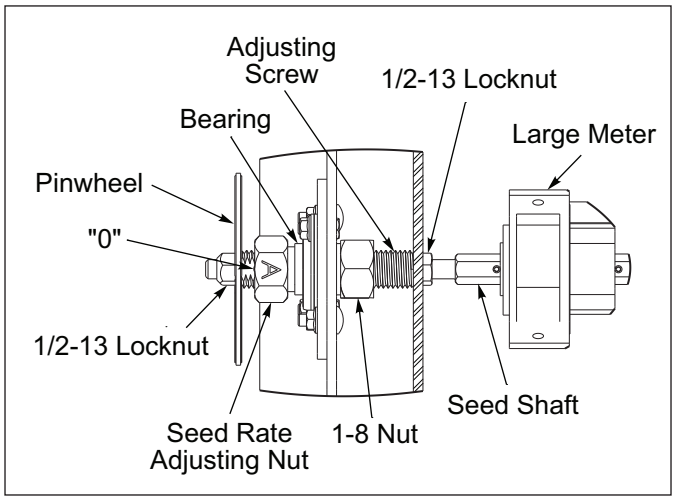

Figure 4-17: Large Meter Seed Box Rate Adjuster

All Seed Meters should be closed. Seed Meter Feed Shutoff against Seed Meter Cup Star Washer in Seed Meter Cup. **See Figure 4-18.** If not, there are two adjustments to make as needed.

IMPORTANT

Ensure that the Seed Shaft can turn freely without any binding when the Seed Meters are open or closed after servicing. Seed Box with Large Seed Meters you may need to make adjustments to the Seed Meter Supports at each Seed Meter Cup. See Figure 4-19.

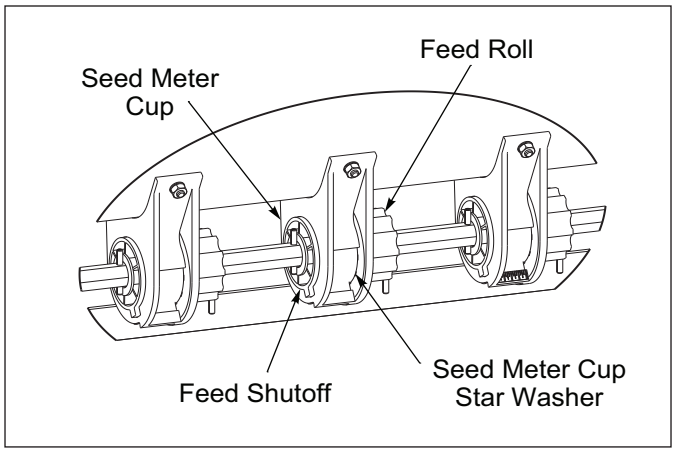

Figure 4-18: Seed Meter Feed Shutoff

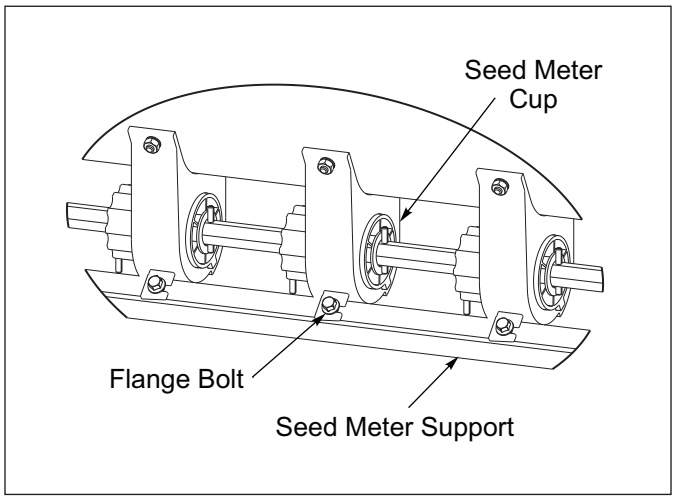

Figure 4-19: Seed Meter Supports

1. **Micro-Meter Box:** Hex Collar with Set Screws on both ends of the Adjusting Screw are used to adjust all Seed Meters the same amount. **See Figure 4-16.** To adjust Seed Meters to be closed at "0A", loosen Hex Collars with Set Screws (remove set screws first) and set Adjusting Screw to "0A". Slide Seed Shaft to close all Seed Meters. Tighten Hex Collars with Set Screws against Adjusting Screw and install set screws to lock against Seed Shaft flats. *Once adjusted **DO NOT** loosen or adjust the Hex Collars.*
2. **Large Meter Box:** 1/2-13 Locknuts on both ends of the Adjusting Screw are used to adjust all Seed Meters the same amount. **See Figure 4-17.** To adjust Seed Meters to be closed at “0A”, loosen 1/2-13 Locknuts and set Adjusting Screw to “0A”. Slide Seed Shaft to close all Seed Meters. Tighten 1/2-13 Locknuts against Adjusting Screw. *Once adjusted **DO NOT** loosen or adjust the 1/2-13 Locknuts.*

3. **Micro-Meter Box:** Individual Seed Meter Cups can be adjusted as required. Adjustments can be made by loosening the 1/4-20 x 5/8 Machine Screws that mount the Seed Meter Cup to the Seed Box. Adjust the affected Seed Meter Cup so the Feed Shutoff is against the Seed Meter Cup Star Washer in the Seed Meter Cup (closed). Be sure the Feed Roll stays engaged in the Seed Meter Cup Star Washer. **See Figure 4-21.**

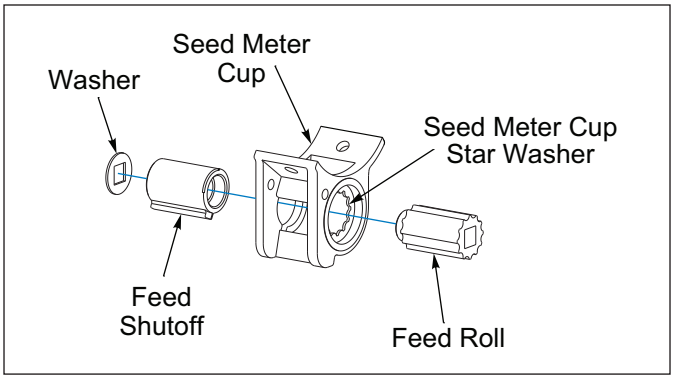

Figure 4-20: Micro-Meter

4. **Large Meter Box:** Individual Seed Meter Cups can be adjusted as required. Adjustments can be made by loosening the 1/4-20 x 5/8 Machine Screws that mount the Seed Meter Cup to the Seed Box and the 1/4-20 Nut that attaches the Seed Meter Support to the Seed Meter Cups. **See Figure 4-19.** Adjust the affected Seed Meter Cup so the Feed Shutoff is against the Seed Meter Cup Star Washer in the Seed Meter Cup (closed). Be sure the Feed Roll stays engaged in the Seed Meter Cup Star Washer. **See Figure 4-21.** Check for binding by turning Seed Shaft. After adjustments have been made seal the Seed Meter Cups to Seed Box with clear Silicone.

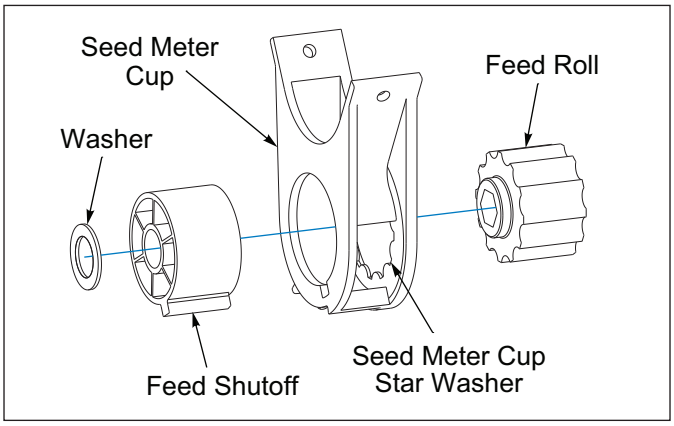

Figure 4-21: Large Seed Meter

Servicing Metered Seed Shafts

After you have serviced a Seed Shaft, Seed Meters or related components you will need to Zero out the Seed Meters to ensure that you are seeding uniformly. **See "Seed Meter Adjustment" on page 4-14.** The following is a list of things to be conscience of when re-assembling the Seed Shafts.

- Ensure that the Washers are adjacent to Seed Meter Feed Shutoffs. **See Figures 4-20 and 4-21.**
- Ensure that the Seed Shaft can turn freely without any binding when the Seed Meters are open or closed after servicing. You may need to make adjustments to the Seed Meter Supports at each Large Seed Meter.

Agitator Box Slide Adjustment

When the Agitator Box Slide is properly adjusted, the following should occur.

- When the Pointer is set to “0” (closed), the Agitator Box bottom opening end edge is aligned with the Slide opening end edge. **See Figure 4-22.**

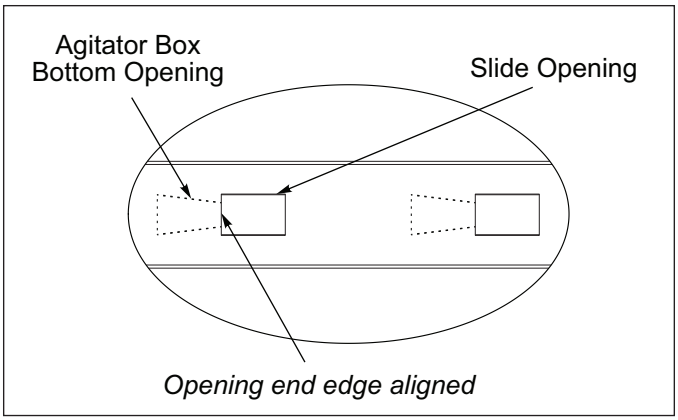

Figure 4-22: Pointer Set at “0”

- When the Pointer is set to “6” (open), the Agitator Box bottom opening end edges are aligned with the Slide opening end edges. Agitator Box bottom opening is completely visible. **See Figure 4-23.**

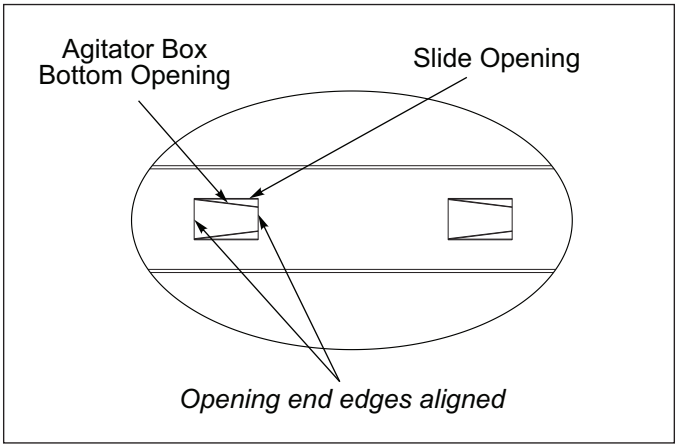

Figure 4-23: Shifter Handle Set at “6”

Adjusting the Agitator Box Slide

1. Turn the Adjusting Screw Handle until the Slide opening edge is aligned with the Agitator Box bottom opening edge. The Agitator Box opening should be completely closed. **See Figure 4-24.**
2. The Pointer should be at “0” and the opening in the bottom of the Agitator Box should be completely closed. If not, loosen the hardware that attaches the Indicator Mount to the Agitator Box. Move the Indicator Mount slightly until the Pointer reads “0” on the Indicator Mount.

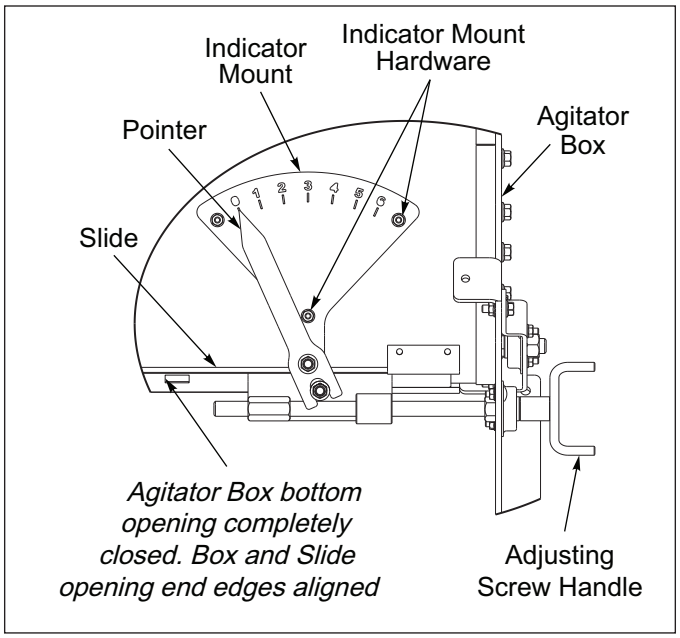

Figure 4-24: Agitator Box Completely Closed.

3. Re-tighten the Indicator Mount Hardware.
4. Check that the Adjusting Screw and Pointer functions properly in relationship with the Indicator Plate.
   - Turn the Adjusting Screw Handle until the Pointer indicates “0”. The Agitator Box bottom opening should be fully closed. **See Figure 4-24.**
   - Turn the Adjusting Screw Handle until the Pointer indicates “6”. The Agitator Box bottom opening should be completely open. **See Figure 4-25.**

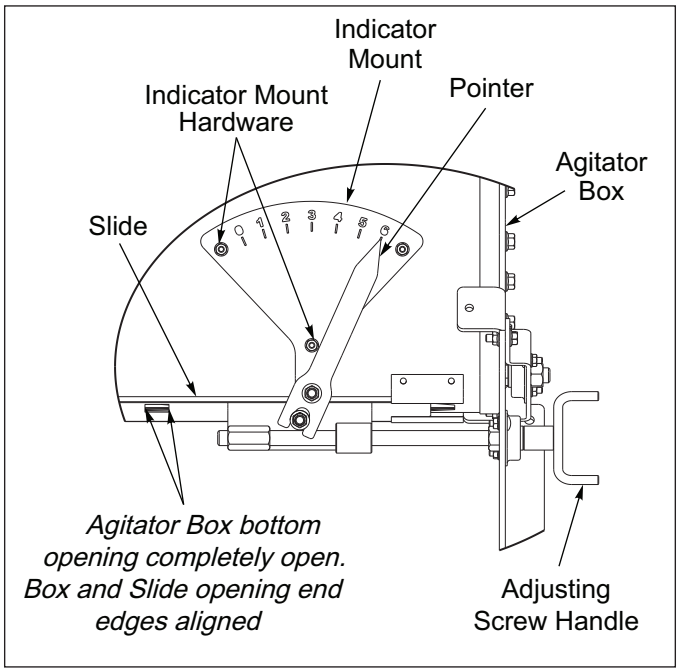

Figure 4-25: Agitator Box Completely Open.

5. Set the Pointer to “0”.

Warning Lamps

When plugging in the 7-Pin Warning Lamp Connector:

1. Make sure the Tractor has a good clean Receptacle, free of dirt and corrosion.
2. Make sure the 7-Pin Connector is inserted ALL the way in. With tighter fitting pins, operator may think the Connector is all the way in, but it really isn't.
3. Make sure the Tractor Receptacle Cover latches over the keyway on the 7-Pin Connector to hold the Connector in place.

If an operator plugs in the 7-Pin Connector, but the lights Do Not seem to work right, check the above items to make sure there is a good connection with the 7-Pin Connector.

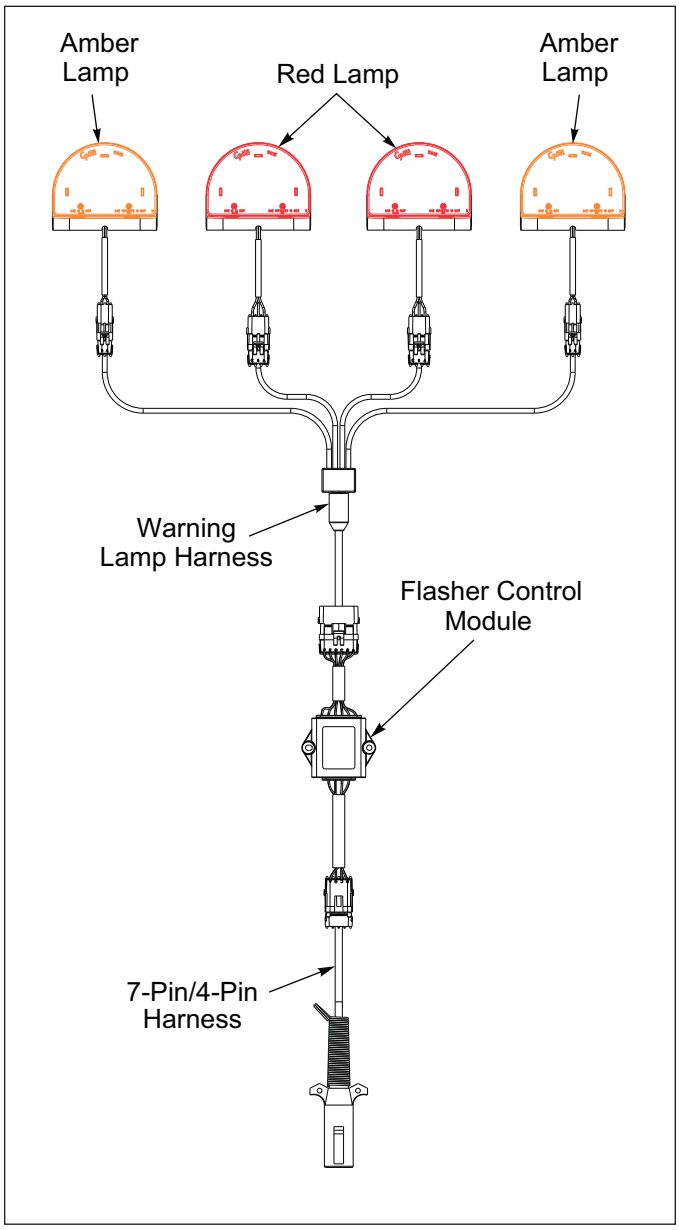

Figure 4-26: Warning Lamps

Acre Meter Troubleshooting

IMPORTANT

Acre Meter is dust and splash resistant, under no circumstances should this unit be submerged in any conductive, corrosive, or flammable liquid. At no time use high pressure water or air to clean it, as this can damage the unit. See Figure 4-27.

Figure 4-27: High Pressure Warning

NOTE

The ground wire is for static discharge protection and has no effect on the ability of the sensor to function properly under normal conditions.

The battery operated Acre Meter uses 3 AA batteries. The Acre Meter will display **"LObat"** when the batteries require replacement. Remove the Acre Meter from the machine and then the 4 Screws on the back of the case. **See Figure 3-30.** Separate the housing from the rear plate. Replace with 3 quality AA batteries.

Acre Meter does not count pulses during calibration or does not count acres during operation.

1. Check the position of the Magnet Wheel Assembly and Pick-Up Switch against the set-up instructions in this manual. **See "Acre Meter Kit - Optional" on Page 2-11.**
2. Verify that the magnet in the Magnet Wheel Assembly has not come out.
3. Place the Acre Meter display in "Calibrate" mode by pressing the ***(FUNC)** key until the **"P-Word"** indicator is lit and then press the up/down arrow keys until the display shows 0 and the LED is blinking. Break the connection between the display and the Pick-Up Switch and short between pins A and B on the display harness connector. You should see the display increment +1 with each contact of the connector terminals.
4. If Step 3 works then wave a magnet in front of the Pick-Up Switch face with it re-connected to the display and see if the display increments up. If not, put an ohm meter or continuity tester on the contacts of the Pick-Up Switch harness and place a magnet in front of the Pick-Up Switch face. The Pick-Up Switch should show continuity or near zero ohms resistance.

Acre Meter cannot change the width or pulse count settings or clear the field and total acres.

1. Check to see if a password needs to be entered by pressing the ***(FUNC)** key until the **"P-Word"** indicator LED is lit. If **"dIS"** is displayed (password disabled) no password is set.
2. If **"Ent"** is displayed a password must be entered to change the settings or the password must be disabled as instructed in the setup section of this manual.

Storage

1. The service life of the Seeder will be extended by proper off-season storage practices. Prior to storing the unit, complete the following procedures:
   - Completely clean the unit, blow all seed out of Seed Meters.
   - Inspect the machine for worn or defective parts. Replace as needed.
   - Repaint all areas where the original paint is worn off.
   - Apply a light coating of oil or grease to exposed Cylinder Rods to prevent them from rusting.
   - Lubricate each point of the machine as stated in **"Lubrication" on Page 4-4.**
2. Store the unit in a shed or under a tarpaulin to protect it from the weather. The ground engaging components and Tires should rest on boards, or some other object, to keep them out of the soil.
3. **3-PT Hitch Models:** Install Rear Roller Locking Pins on each side to hold the Rear Roller Arms down and lower Parking Stands. **See Figures 3-2 and 3-3.** Chock or block Rotors before unhitching from tractor.
4. **Pull Type Models:** Raise the machine and engage Transport Locks. **See Figure 3-4.** Lower Drawbar Jack.
   - Relieve Hydraulic Pressure in hoses after Transport Locks are installed.
   - Block Transport Wheels before unhitching from Tractor.

Troubleshooting

Problem	Solution
Machine is shaking or Tillage Rotor is bouncing	Reduce operating depth of Tillage Rotor
	Increase air pressure in Air Shock
Machine is shaking and Drive Rotor is not Turning	Check if rotors are plugged
	Check rotor drive chain
Drive Rotor is skidding	Check for items that maybe plugging rotors
	Check rotor drive chain
Tillage Rotor Teeth plugging up with soil and vegetation	Soil is too wet for seeder operation
Tillage Rotor plugging with long grass	Grass is too wet or green for seeder operation
Uneven seed distribution or uneven stand	Check for plugged seed meters and drop tubes
	Check to see if agitator is working properly
Seed is not coming out	Check if Transmission Drive Pins are in place
	Check if seed is in Seed Box
	Check if Transmission chains are properly adjusted

Table provided for general use.

NOTES:

Chapter 5

Specifications

Product Attributes	BPSB-8	BPSBA-8
Approximate Weight	5,070 lbs. (2,300 kg)	5,287 lbs. (2,398 kg)
Working Width	8 ft. 0 in. (2.4 m)	8 ft. 0 in. (2.4 m)
Working Overall Height	5 ft. 5 in. (1.7 m)	5 ft. 5 in. (1.7 m)
Working Overall Length	14 ft. 8 in. (4.5 m)	14 ft. 8 in. (4.5 m)
Transport Overall Width	11 ft. 4 in. (3.4 m)	11 ft. 4 in. (3.4 m)
Transport Overall Height	6 ft. 8 in. (2.0 m)	6 ft. 8 in. (2.0 m)
Transport Overall Length	13 ft.11 in. (4.2 m)	13 ft.11 in. (4.2 m)
Road Clearance	10 in. (254 mm)	10 in. (254 mm)
Micro-Meter Seed Box Capacity	2.5 Bu. (88.1 l), 6 in. (152.4 mm) Spacing	2.5 Bu. (88.1 l), 6 in. (152.4 mm) Spacing
Large Meter Seed Box Capacity	6.3 Bu. (222.0 l), 6 in. (152.4 mm) Spacing	6.3 Bu. (222.0 l), 6 in. (152.4 mm) Spacing
Seed Meter Spacing	6 in. (152 mm)	6 in. (152 mm)
Agitator Box Capacity	Optional	6.3 Bu. (88.1 l) Agitator Box
Agitator Box Opening	N/A	4 in. (102 mm)
Seed Metering System	Micro-Meter and Large Meter	Micro-Meter,Large Meter and Agitator
Seed Metering System Drive	Ground Driven	Ground Driven
Seed Delivery	Broadcast with Wind Deflectors	Broadcast with Wind Deflectors
Drive and Tillage Rotor Axles	3 in. (76.2 mm) Square Tube	3 in. (76.2 mm) Square Tube
Driver Rotor Blade Diameter	19.6 in. (497.8 mm) OD	19.6 in. (497.8 mm) OD
Drive Rotor Number of Blades	36	36
Tillage Rotor Blade Diameter	18 in. (457.2 mm) OD	18 in. (457.2 mm) OD
Tillage Rotor Number of Blades	37	37
Rotor Blade Material	0.25 in. (6.4 mm) Abrasion Resistant Steel	0.25 in. (6.4 mm) Abrasion Resistant Steel
Rotor Blade Spacing	2.75 in. (69.9 mm)	2.75 in. (69.9 mm)
Rotor Drive Bearings (Right Side)	1.780 in. (45.2 mm) Sealed Bearings	1.780 in. (45.2 mm) Sealed Bearings
Rotor Bearings (Left Side)	1.535 in. (39.0 mm) Sealed Bearings	1.535 in. (39.0 mm) Sealed Bearings
Rotor Drive Type	Ground Driven	Ground Driven
Rotor Drive System	#80-2 Roller Chain	#80-2 Roller Chain
Rotor Drive Ratio	2:1	2:1
Rotor Independent Flotation	Standard	Standard
Tillage Rotor Air Shock Down Pressure	Standard	Standard
Rear Rubber Firming Roller	358 lbs. (162 kg)	358 lbs. (162 kg)
Rear Rubber Firming Roller Bearings	1.535 in. (39.0 mm) Sealed Bearings	1.535 in. (39.0 mm) Sealed Bearings
Number of Double-Rib Press Wheels	25	25
Firming Roller Independent Flotation	Standard	Standard
Firming Roller Air Shock Down Pressure	Standard	Standard
Adjustable Gauge Wheel	Standard	Standard
Gauge Wheel Tire	4.8 x 12-LRC Bias	4.8 x 12-LRC Bias
Air Shock Air Pressure Range	20 to 120 psi (138 to 827 KPa)	20 to 120 psi (138 to 827 KPa)
Hitch Type	Cat. 2 Drawbar	Cat. 2 Drawbar
Lift Tire Size	9.5L - 15, 8 Ply Rating Implement Rib	9.5L - 15, 8 Ply Rating Implement Rib
Blade Agitator	N/A	Standard
Electronic Acre Meter	Optional	Optional
Dual Wheel Kit	Optional	Optional
Safety Warning Lights & SMV Emblem	Standard	Standard
Safety Chain Kit	Standard	Standard
Horsepower Requirements	45 HP (34 kw) Minimum	45 HP (34 kw) Minumum
Required 3-PT Hitch Lift Capacity	N/A	N/A
Recommended Operating Speed	4 to 8 MPH (6.4 to 12.9 km/h) Dependent on Conditions	4 to 8 MPH (6.4 to 12.9 km/h) Dependent on Conditions
Acres/Hour (100% Efficiency)	3.9 at 4 MPH, 7.8 at 8 MPH	3.9 at 4 MPH, 7.8 at 8 MPH

Specifications subject to change with or without notice.

Figure 5-1: Specifications BPSB

Product Attributes	BPSBP-8	BPSBAP-8
Approximate Weight	4454 lbs. (2,020 kg)	4671 lbs. (2,119 kg)
Working Width	8 ft. 0 in. (2.4 m)	8 ft. 0 in. (2.4 m)
Working Overall Height	5 ft. 5 in. (1.7 m)	5 ft. 5 in. (1.7 m)
Working Overall Length	5 ft. 10 in. (1.8 m)	5 ft. 10 in. (1.8 m)
Transport Overall Width	11 ft. 4 in. (3.4 m)	11 ft. 4 in. (3.4 m)
Transport Overall Height	Tractor Dependent	Tractor Dependent
Transport Overall Length	Tractor Dependent	Tractor Dependent
Road Clearance	Tractor Dependent	Tractor Dependent
Micro-Meter Seed Box Capacity	2.5 Bu. (88.1 l), 6 in. (152.4 mm) Spacing	2.5 Bu. (88.1 l), 6 in. (152.4 mm) Spacing
Large Meter Seed Box Capacity	6.3 Bu. (222.0 l), 6 in. (152.4 mm) Spacing	6.3 Bu. (222.0 l), 6 in. (152.4 mm) Spacing
Seed Meter Spacing	6 in. (152 mm)	6 in. (152 mm)
Agitator Box Capacity	Optional	6.3 Bu. (88.1 l) Agitator Box
Agitator Box Opening	N/A	4 in. (102 mm)
Seed Metering System	Micro-Meter and Large Meter	Micro-Meter,Large Meter and Agitator
Seed Metering System Drive	Ground Driven	Ground Driven
Seed Delivery	Broadcast with Wind Deflectors	Broadcast with Wind Deflectors
Drive and Tillage Rotor Axles	3 in. (76.2 mm) Square Tube	3 in. (76.2 mm) Square Tube
Driver Rotor Blade Diameter	19.6 in. (497.8 mm) OD	19.6 in. (497.8 mm) OD
Drive Rotor Number of Blades	36	36
Tillage Rotor Blade Diameter	18 in. (457.2 mm) OD	18 in. (457.2 mm) OD
Tillage Rotor Number of Blades	37	37
Rotor Blade Material	0.25 in. (6.4 mm) Abrasion Resistant Steel	0.25 in. (6.4 mm) Abrasion Resistant Steel
Rotor Blade Spacing	2.75 in. (69.9 mm)	2.75 in. (69.9 mm)
Rotor Drive Bearings (Right Side)	1.780 in. (45.2 mm) Sealed Bearings	1.780 in. (45.2 mm) Sealed Bearings
Rotor Bearings (Left Side)	1.535 in. (39.0 mm) Sealed Bearings	1.535 in. (39.0 mm) Sealed Bearings
Rotor Drive Type	Ground Driven	Ground Driven
Rotor Drive System	#80-2 Roller Chain	#80-2 Roller Chain
Rotor Drive Ratio	2:1	2:1
Rotor Independent Flotation	Standard	Standard
Tillage Rotor Air Shock Down Pressure	Standard	Standard
Rear Rubber Firming Roller	358 lbs. (162 kg)	358 lbs. (162 kg)
Rear Rubber Firming Roller Bearings	1.535 in. (39.0 mm) Sealed Bearings	1.535 in. (39.0 mm) Sealed Bearings
Number of Double-Rib Press Wheels	25	25
Firming Roller Independent Flotation	Standard	Standard
Firming Roller Air Shock Down Pressure	Standard	Standard
Adjustable Gauge Wheel	Standard	Standard
Gauge Wheel Tire	4.8 x 12-LRC Bias	4.8 x 12-LRC Bias
Air Shock Air Pressure Range	20 to 120 psi (138 to 827 KPa)	20 to 120 psi (138 to 827 KPa)
Hitch Type	Cat. 2,3 Free Link; Cat. 2,3,3N Quick Coupler	Cat. 2,3 Free Link; Cat. 2,3,3N Quick Coupler
Lift Tire Size	N/A	N/A
Blade Agitator	N/A	Standard
Electronic Acre Meter	Optional	Optional
Dual Wheel Kit	N/A	N/A
Safety Warning Lights & SMV Emblem	Standard	Standard
Safety Chain Kit	N/A	N/A
Horsepower Requirements	75 HP (56 kw) Minimum	75 HP (56 kw) Minimum
Required 3-PT Hitch Lift Capacity	5,000 lbs. (2,268 kg) Minimum 24 in. (610 mm) Behind Lift Arms	5,000 lbs. (2,268 kg) Minimum 24 in. (610 mm) Behind Lift Arms
Recommended Operating Speed	4 to 8 MPH (6.4 to 12.9 km/h) Dependent on Conditions	4 to 8 MPH (6.4 to 12.9 km/h) Dependent on Conditions
Acres/Hour (100% Efficiency)	3.9 at 4 MPH, 7.8 at 8 MPH	3.9 at 4 MPH, 7.8 at 8 MPH

Specifications subject to change with or without notice.

Figure 5-2: Specifications BPSBP

Document Control Revision Log:

Date	Form #	Improvement(s): Description and Comments
05/2023	F-1097-2305	Initial Release (Revision Format “Year/Month”)

Equipment from Landoll Company, LLC is built to exacting standards ensured by ISO 9001 registration at all Landoll manufacturing facilities.

Till 'N Seed®
Models BPSB-8, BPSBP-8, BPSBA-8, BPSBAP-8
Operator's Manual

Re-Order Part Number F-1097

LANDOLL COMPANY, LLC
1900 North Street
Marysville, Kansas 66508
(785) 562-5381
800-428-5655 ~ WWW.LANDOLL.COM