A LANDOLL® Company

Model 1432/1432RS/1632/1632RS
Pull Type Grader
Parts/Service Manual

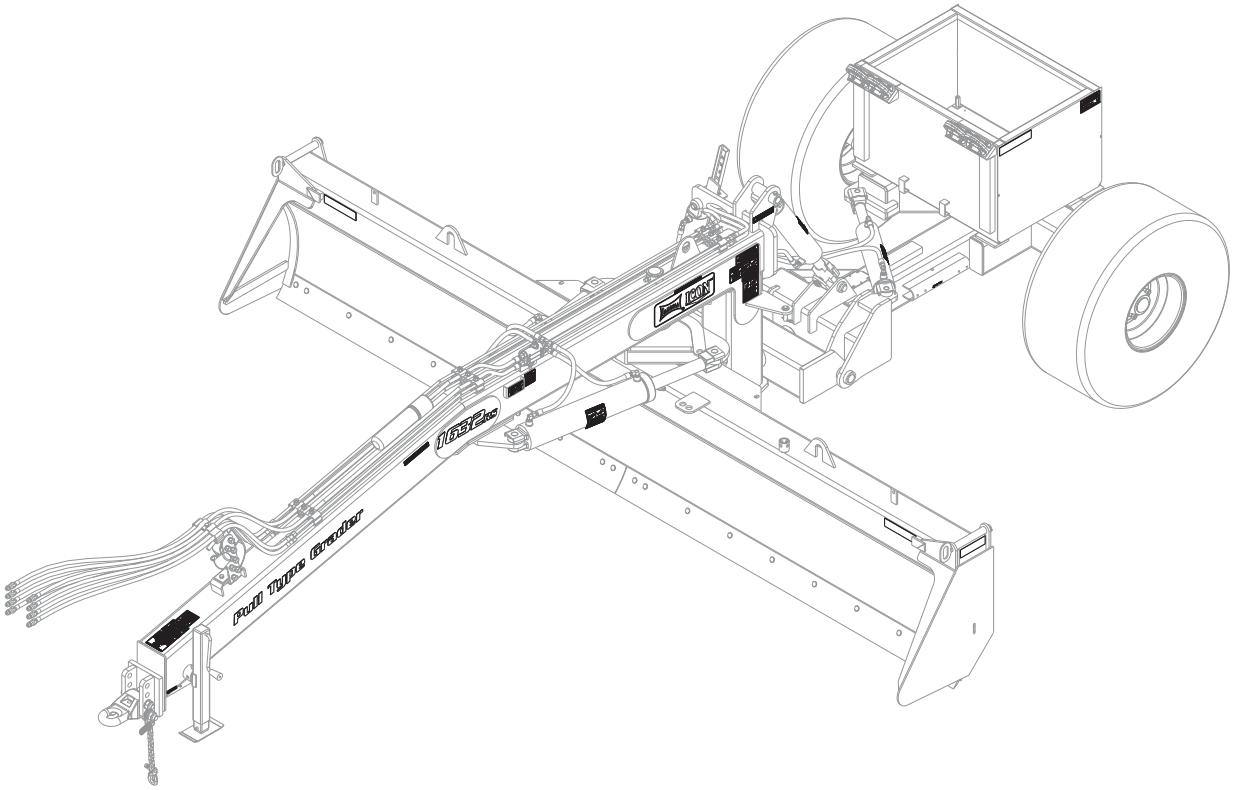

LANDOLL COMPANY, LLC
1900 North Street
Marysville, Kansas 66508
(785) 562-5381
800-428-5655 ~ WWW.LANDOLL.COM

F-740-2511

Instructions for Ordering Parts

**** Repair parts must be ordered through an Authorized Dealer ****

DEALER INSTRUCTIONS FOR ORDERING PARTS FROM LANDOLL PARTS DISTRIBUTION CENTER

Phone #: 800-423-4320 or 785-562-5381 **Fax #: 888-527-3909**
Order online: dealer.landoll.com

IDENTIFICATION PLATE

The identification plate, which lists the model number and serial number, is located on the front of the frame.

SERIAL NUMBER

The serial number is located on the identification plate.
The Following information will help decode the Grader serial number

12H250000 = xxmyyssssss

QR CODE DECAL

The Grader series QR code decal, may be scanned to link you to the most current manuals, located on the front of the frame *See Figure 1-1*

xx	= model series (i.e. 12 for Grader)
m	= month of manufacture (ex. “H” means October. The letter I is not used.)
yy	= year manutactured (ex. “25” means 2025)
sssss	= Sequential number used to track warranty and service information.

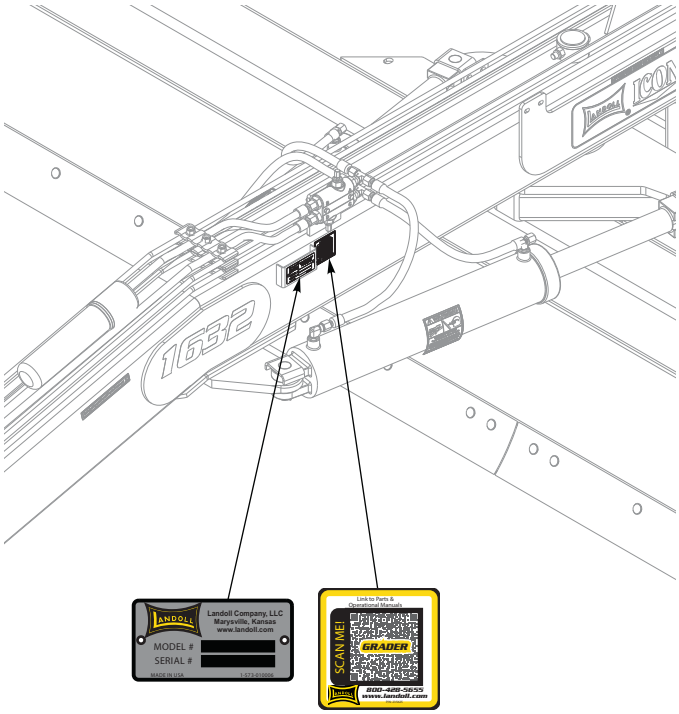

Figure 1-1: Identification Plate and QR Code Decal Location

Manuals for 1432/1432RS/1632/1632RS

Manual Number	Manual Type
F-740	Parts/Service Manual

DANGER

DO NOT operate or perform any maintenance tasks on this equipment until you have completed the following:

1. **Receive proper training to operate this equipment safely.**
2. **Read and understand the operator's manual.**
3. **Be thoroughly trained on inspection and repair procedures.**

Failure to comply with this warning may result in serious injury or possibly death.

Table of Contents

1 Introduction and Safety Information

Understanding Safety Statements 1-2
Decal Safety 1-2
Transporting Safety 1-2
Attaching, Detaching, and Storage 1-3
Maintenance Safety 1-3
High Pressure Fluid Safety 1-3
Protective Equipment 1-3
Chemical Safety 1-3
Prepare for Emergencies 1-3
Tire Safety 1-4
Safety Chain 1-4
Safety Decals and Reflectors 1-5

2 Standard Specifications

Introduction 2-1
Owner Assistance 2-1
Warranty Registration 2-1
General Torque Specifications 2-3
Hydraulic Fitting Torque Specifications 2-4
Model Specification 2-5

3 Assembly and Lubrication

Assembly and Lubrication Check List 3-1
Lubrication Maintenance 3-1

4 Hookup and Operation

Description of Machine 4-1
Tie Strap Designations 4-1
Hookup to the Remote 4-2
Learning to Operate the Grader 4-2

5 Illustrated Parts List

General Assembly 5-1
Grader Assembly Rear 5-3
Grader Assembly Front 5-5
Grader Assembly Bottom 5-7
Snow/Dirt Skid Assembly 5-9
Hub/Spindle Assembly (To 02/01/2020) 5-11
Hub/Spindle Assembly (From 02/01/2020 To 06/01/2022) 5-13
Hub/Spindle Assembly (From 06/01/2022) 5-15
Jack Assembly 5-17
Cylinder & Hose Clamp Assembly 5-19
Hydraulic Assembly 5-22
Cylinder Assembly 4 x 12 5-25

Cylinder Assembly 4 x 16 5-26
Cylinder Assembly 5 x 24 5-27
Electrical Assembly W/LED Lights 5-28
Light Kit Before 6-1-2016 5-31
Decals 5-33
Gauge Wheel Assembly 5-37
Hub/Spindle Assembly (Gauge Wheel) 5-39
GPS Mount Assembly (Optional) 5-41

6 Glossary

7 Index

Introduction and Safety Information

The Landoll /Icon Model 1432/1432RS/1632/1632RS Grader is a quality product designed to give years of trouble free performance. By following each section of this manual, your system will perform as designed for you and your operation.

CHAPTER 1 Gives basic instructions on the use of this manual and understanding the safety statements and safety decal locations.

CHAPTER 2 The Warranty Registration form is included with the product documents. Fill it out and mail it within 15 days of purchase.

NOTE: IMPROPER ASSEMBLY, MODIFICATION, OR MAINTENANCE OF YOUR LANDOLL MACHINE CAN VOID YOUR WARRANTY.

Gives product specifications for the equipment. These specifications supply lengths and measurements for your equipment. A Standard Bolt Torque Table is provided to give guidelines for bolt torques to be used when servicing this product.

CHAPTER 3 Contains assembly instructions for your Pull Type Grader. When these procedures are correctly followed, your equipment should provide you years of trouble-free operation and service.

CHAPTER 4 Instructs how to operate your equipment before using it, and describes adjustments needed. Gives practical advice for the care and maintenance of your Landoll equipment. Drawings in this section locate adjustment points on the equipment.

IF YOU HAVE ANY QUESTIONS CONTACT:
LANDOLL COMPANY, LLC
1900 NORTH STREET
MARYSVILLE, KANSAS 66508

PHONE # (785) 562-5381 or (800) 428-5655
OR
FAX # (888) 527-3909

CHAPTER 5 Contains various assemblies, subassemblies, and systems. Refer to this section of manual when ordering Landoll/Icon replacement parts. Order parts from your Landoll/Icon dealer.

COMMENTS Address comments or questions regarding this publication to:

LANDOLL COMPANY, LLC
1900 NORTH STREET
MARYSVILLE, KANSAS 66508
ATTENTION: PUBLICATIONS - DEPT. 55

CHAPTER 1 Gives basic instructions on the use of this manual and understanding the safety statements and safety decal locations.

Understanding Safety Statements

You will find various types of safety information on the following pages and on the machine signs (decals) attached to the vehicle. This section explains their meaning.

The Safety Alert Symbol means ATTENTION! YOUR SAFETY IS INVOLVED!

NOTE

Means that failure to follow these instructions could cause damage to the equipment or cause it to operate improperly.

NOTICE

Special notice - read and thoroughly understand

CAUTION

Caution means serious equipment or other property damage can occur if instructions on this label are not properly followed.

WARNING

Warning means serious injury or death can occur if safety measures or instructions on this label are not properly followed.

DANGER

Danger means a life-threatening situation exists. Death can occur if safety measures or instructions on this label are not properly followed.

NOTE

Make sure you read and understand the information contained in this manual and on the machine signs (decals) before you attempt to operate or maintain this vehicle.

The safety statements contained in this manual relate to the operation of the Landoll/Icon Grader.

Decal Safety

1. Examine safety decals and be sure you have the correct safety decals for the implement.
2. Keep these signs clean so they can be observed readily. It is important to keep these decals cleaned more frequently than the implement. Wash with soap and water or a cleaning solution as required.
3. Replace decals that become damaged or lost. Also, be sure that any new implement components installed during repair include decals which are assigned to them by the manufacturer.
4. When applying decals to the implement, be sure to clean the surface to remove any dirt or residue. Where possible, sign placement should protect the sign from abrasion, damage, or obstruction from mud, dirt, oil etc.

DANGER

- **Do not allow anyone to ride on the tractor or implement. Riders could be struck by foreign objects or thrown from the implement.**
- **Never allow children to operate equipment.**
- **Keep bystanders away from implement during operation.**

Transporting Safety

1. Thoroughly read and understand all operating procedures contained in this manual before attempting to transport this implement.
2. **It is the responsibility of the operator to understand and comply with all federal, state, and local requirements before transporting the Disc.**
3. When transporting the implement on road or highway, use adequate warning symbols, reflectors, lights, SIS, and slow moving vehicle signs as required. Verify that all symbols and lights are clearly visible and functioning before transporting. Transport during daylight hours whenever possible. Slow moving tractors and implements can create a hazard when driven on public roads and can be difficult to see especially at night.
4. Do not tow an implement that when fully loaded, weighs more than 1.5 times the weight of the towing vehicle. Never tow the implement with a motor vehicle. Tow the implement only with a properly ballasted tractor.
5. Use a locking-style hitch pin that properly fits the tractor drawbar and the implement hitch. Lock the tractor drawbar in the center position to prevent loss of steering control.
6. Attach the safety chain to the tractor recommended

drawbar support. Provide only enough slack in the chain for turning. Do not attach the safety chain to an intermediate support. Safety chain must have rating greater than the gross weight of the towed implement(s). Replace the safety chain if it is worn or damaged in any way.

7. Verify that all hydraulic hoses and electrical wiring between the tractor and implement are safely routed to avoid damage.
8. Check implement tire pressure for correct inflation. Verify that lug nuts are properly torqued before transporting.
9. Install all transport locks and pins before transporting.
10. Never allow riders on the implement.
11. ***Maximum transport speed for the Machine is 20 mph, regardless of the tractor capabilities***. Excessive speed may result in loss of control of the tractor and implement, reduced braking, or failure of the implement tires and/or structure. Slow down when road surface conditions are poor or rough, or when driving on inclines. Reduce speed when turning, on curves and slopes, to avoid tipping. Equipment altered other than the place of manufacture, may further reduce the maximum transport speed.
12. Avoid overhead power lines. Serious injury or death can result. Electrocution can occur without direct contact. Know the transport height and width of the implement before transporting. Attachments can increase the height and width of the implement.

Attaching, Detaching, and Storage

1. Do not stand between the tractor and implement when attaching or detaching implement unless both are not moving.
2. Block implement so it will not roll when unhitched from the tractor.
3. Store in an area where children normally do not play.

Maintenance Safety

1. Understand the procedure before doing the work. Use proper tools and equipment.
2. Make sure all moving parts have stopped.
3. Do not make adjustments or lubricate implement while it is in motion.
4. Block the implement so it will not roll when working on or under it to prevent injury.
5. Engage hydraulic lift cylinder lockouts, or lower equipment to the ground before servicing.

High Pressure Fluid Safety

1. Escaping fluid under pressure can be nearly invisible and have enough force to penetrate the skin causing serious injury. Use a piece of cardboard, rather than hands, to search for suspected leaks.
2. Any fluid injected into the skin must be surgically removed within a few hours or gangrene may result.
3. Avoid the hazard by relieving pressure before disconnecting hydraulic lines.

Protective Equipment

1. Wear protective clothing and equipment.
2. Wear clothing and equipment appropriate for the job. Avoid loose fitting clothing.

3. Because prolonged exposure to loud noise can cause hearing impairment or hearing loss, wear suitable hearing protection, such as earmuffs or earplugs.

Chemical Safety

1. Agricultural chemicals can be dangerous. Improper use can seriously injure persons, animals, plants, soil and property.
2. Read chemical manufactures instructions and store or dispose of unused chemicals as specified.
3. Handle chemicals with care and avoid inhaling smoke from any type of chemical fire.
4. Store or dispose of unused chemicals as specified by the chemical manufacturer.

Prepare for Emergencies

1. Keep a First Aid Kit and Fire Extinguisher handy.
2. Keep emergency numbers for doctor, ambulance, hospital and fire department near the phone.

Tire Safety

1. Tire changing can be dangerous and should be performed by trained personnel using correct tools and equipment.
2. When inflating tires, use a clip-on chuck and extension hose long enough to allow you to stand to one side, not in front of or over the tire assembly. Use a safety cage if available.
3. When removing and installing wheels use wheel-handling equipment adequate for the weight involved.

Safety Chain

1. Use a chain with a strength rating equal to or greater than the gross weight of towed machinery, which is 10,100 pounds minimum in accordance with ASAE S338.2 specifications. If two or more implements are pulled in tandem, a larger chain may be required. Chain capacity must be greater than the TOTAL weight of all towed implements.
2. Additional safety chain should be used between each implement.
3. Attach the chain to the tractor drawbar support or specified anchor location. Allow only enough slack in the chain to permit turning. The distance from hitch pin to attachment point or intermediate support point should not exceed 9 inches.
4. Replace the chain if any links or end fittings are broken, stretched or damaged.
5. Do not use a safety chain for towing

Safety Decals and Reflectors

The Grader is equipped with all safety signs installed for safe operation.

For you safety:

- Carefully read and follow safety sign directions.
- Keep the safety signs clean and visible.
- Replace damaged, missing, or illegible safety signs.
- Be sure any new equipment or repair parts include safety signs. New safety signs may be ordered from your Landoll dealer. Refer to this section for parts and proper safety sign placement.

To Install new safety signs:

1. Remove the old damaged safety sign if still present.
2. Clean placement area to remove any dirt or grease.
3. Remove backing from new safety sign.
4. Apply the safety sign starting from one end pressing firmly and working across the safety sign being careful not to create any air bubbles.

P/N 4000625

Hydraulic Line Color Code

Hydraulic Line Color Code:
Black: Raise / Lower
Yellow: Tilt
White: Blade Angle
1 Tie: Hydraulics Out / 2 Ties: Hydraulics In
4000625

Front of hitch, 1st from left, 1432/1632.

QTY. 1

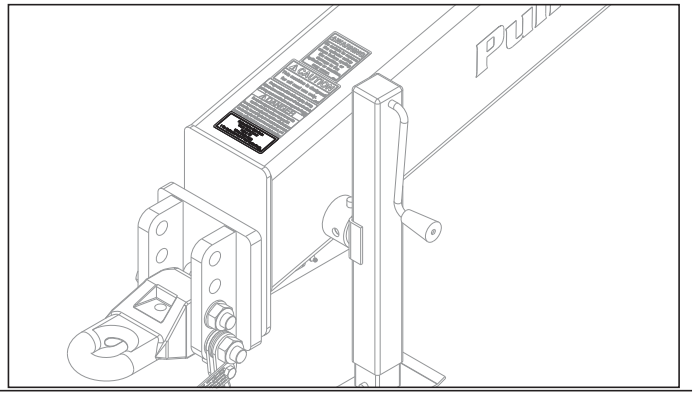

P/N 197567

Hydraulic Line Color Code, RS

Hydraulic Line Color Code:
Black: Raise / Lower
Yellow: Tilt
White: Blade Angle
Blue: Rear Steer
1 Tie: Hydraulics Out / 2 Ties: Hydraulics In
197567

Front of hitch, 1st from left, 1432RS/1632RS.

QTY. 1

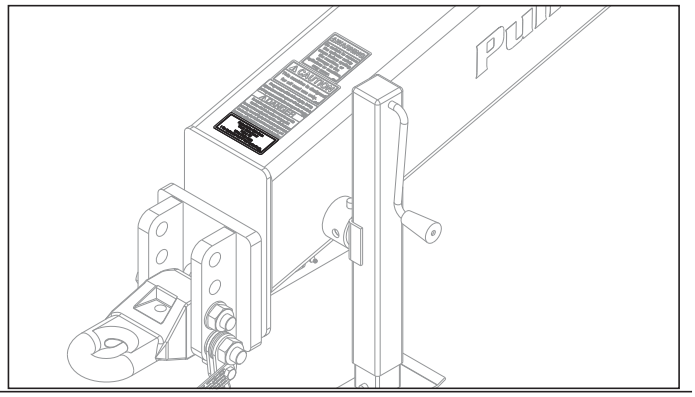

P/N 4001550

DANGER: No Riding

DANGER

Do not allow anyone to ride on or to be near this machine while it is in motion or being cycled.
Do not service or adjust this machine while the tractor is running. Lower all hydraulic elevated components to the down position before service or adjustment, or if necessary, safety block those components in position.
4001550

Front of hitch, 2nd from left.

QTY. 1

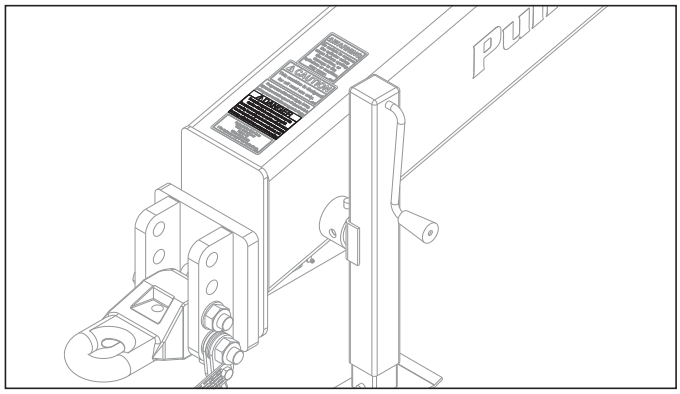

P/N 4001484

Always Contact Utilities Before Digging

Always contact utilities before digging. Striking objects above or below ground will abuse the blade and may cause considerable damage to the Grader.
4001484

Front of hitch, 3rd from left.

QTY. 1

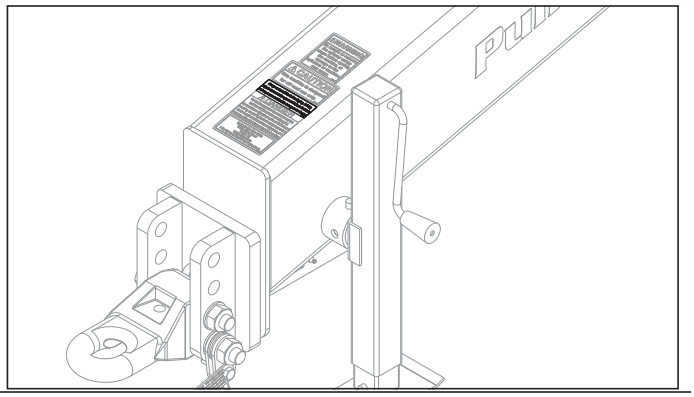

P/N 4001516

CAUTION: Off Road Only

CAUTION

This machine is designed for off road use only.
4001516

Front of hitch, 4th from left.

QTY. 1

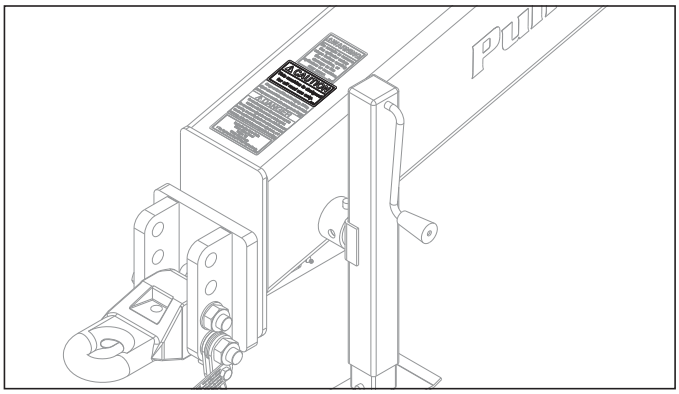

P/N 4001446

WARNING: Remove Cylinder Stop

WARNING

Be certain to remove the cylinder safety stops before cycling the machine, or damage to the cylinders or machine, may occur.
4001446

Front of hitch, 5th from left.

QTY. 1

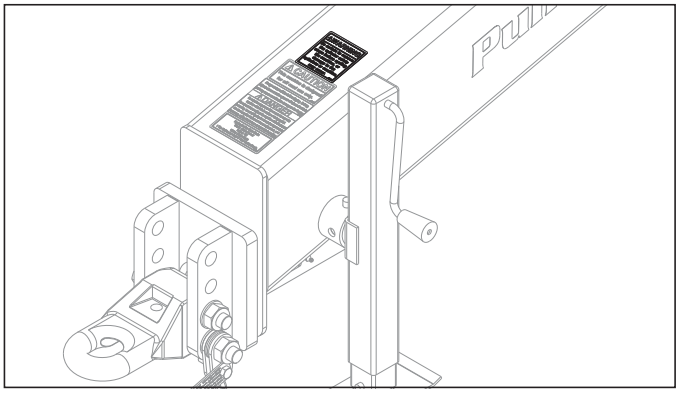

P/N 4000935

Safety/Operations/Parts/Manual

Safety/Operations/Parts/Manual
4000935

Middle of hitch, left side.

QTY. 1

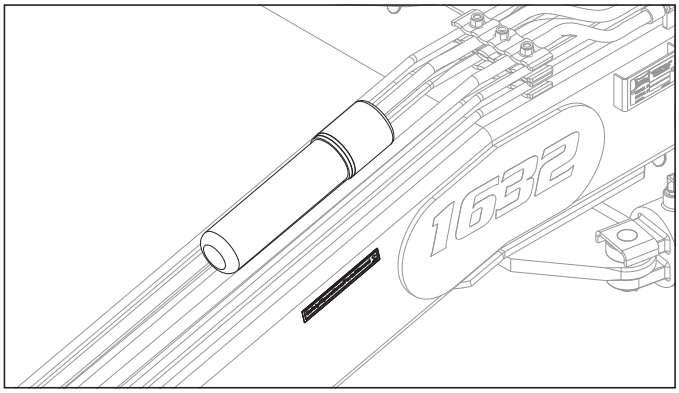

P/N 4000931

WARNING: High Pressure Fluid

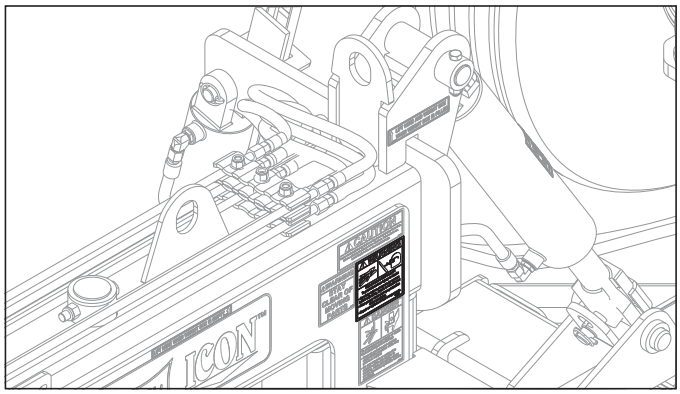

Rear of hitch, middle, left side.

QTY. 1

P/N 4000931

WARNING: High Pressure Fluid

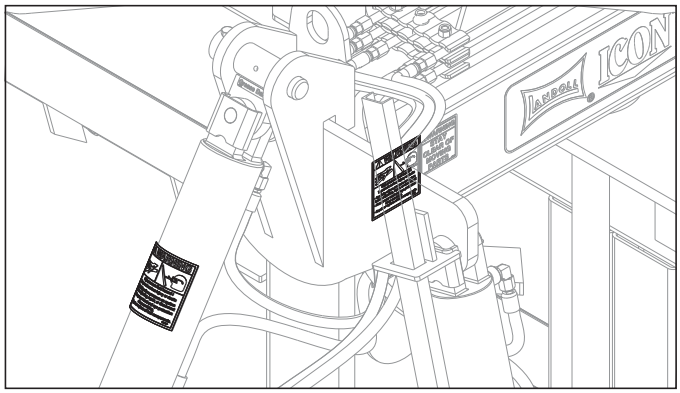

Rear of hitch, Right side & back side of lift cylinder.

QTY. 2

P/N 4000931

WARNING: High Pressure Fluid

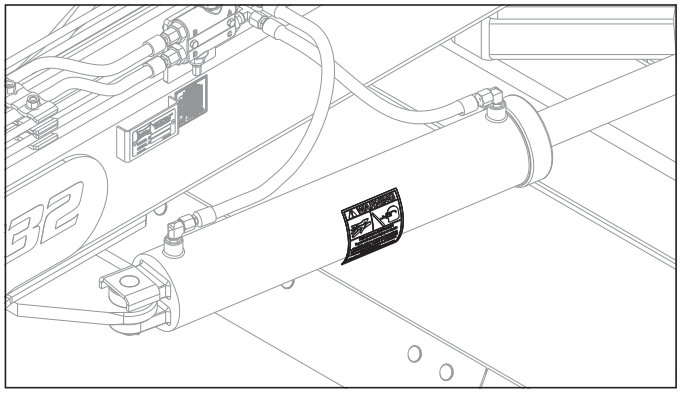

Mowboard angle cylinder, both sides.

QTY. 2

P/N 4000372

WARNING: Stay Clear Moving Parts

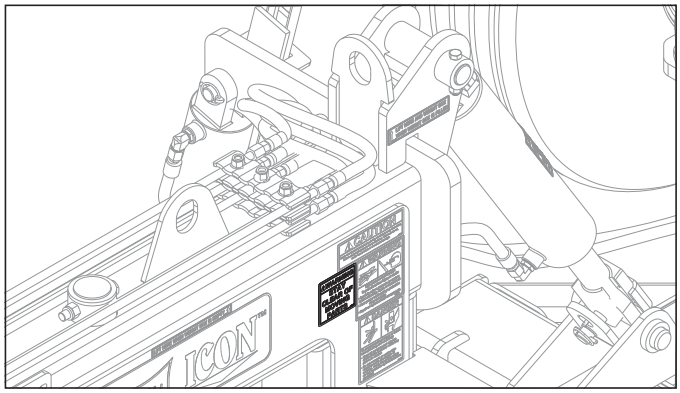

Rear of hitch, left side.

QTY. 1

P/N 4000372

WARNING: Stay Clear Moving Parts

Rear of hitch, right side.

QTY. 1

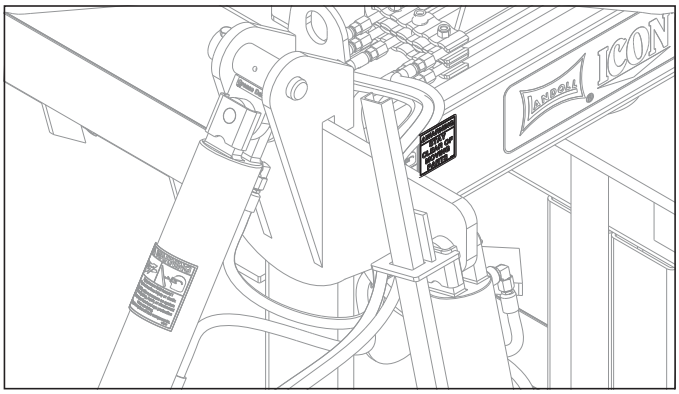

P/N 4000940

DANGER: Pinching/Crushing

Rear of hitch, middle, left side.

QTY. 1

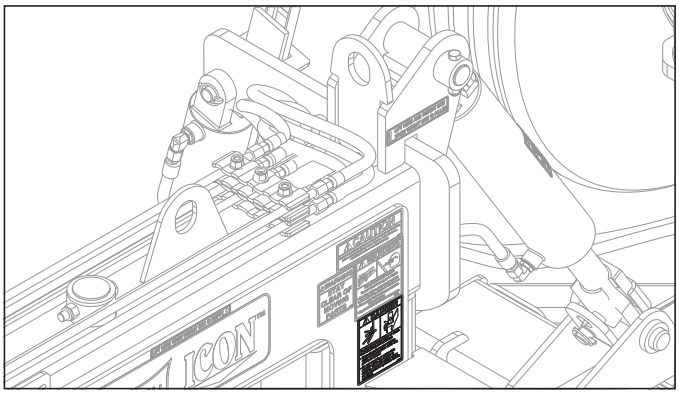

P/N 4000940

DANGER: Pinching/Crushing

Rear of hitch, bottom, right side.

QTY. 1

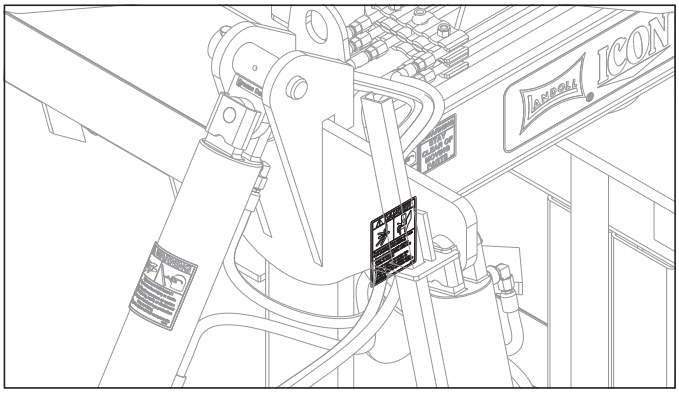

P/N 4001527

CAUTION: Unpin Mowboard

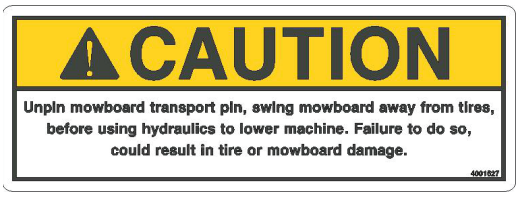

Rear of hitch, top, left side.

QTY. 1

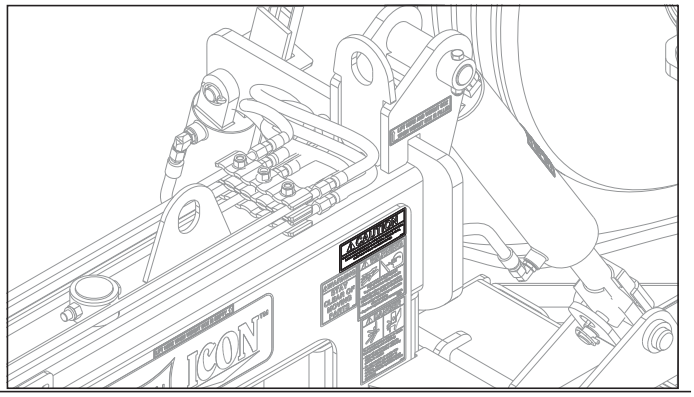

P/N 4001558

WARNING: 35PSI Tire Pressure

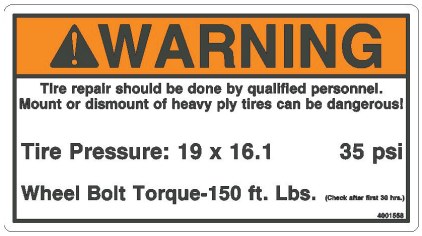

Side of weight box, rear, both sides.

QTY. 2

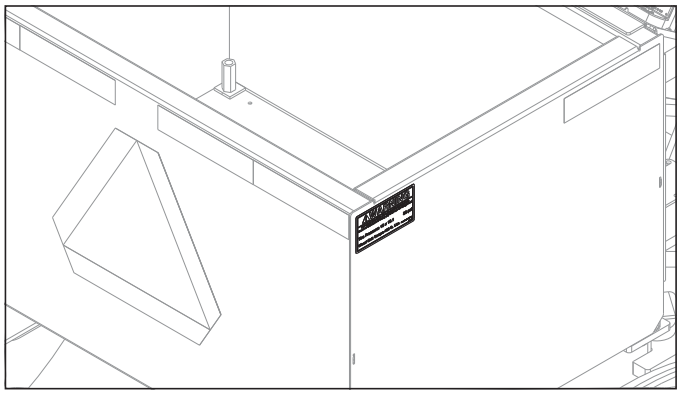

P/N 528934

Yellow Reflector

Side of weight box, front, both sides.

QTY. 2

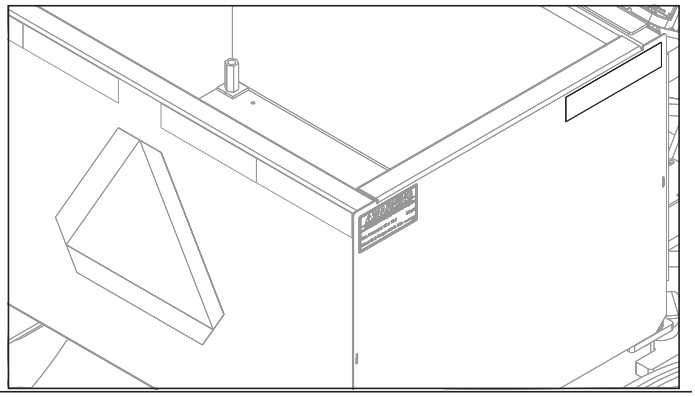

P/N 528934

Yellow Reflector

Front of mowboard, both sides.

QTY. 2

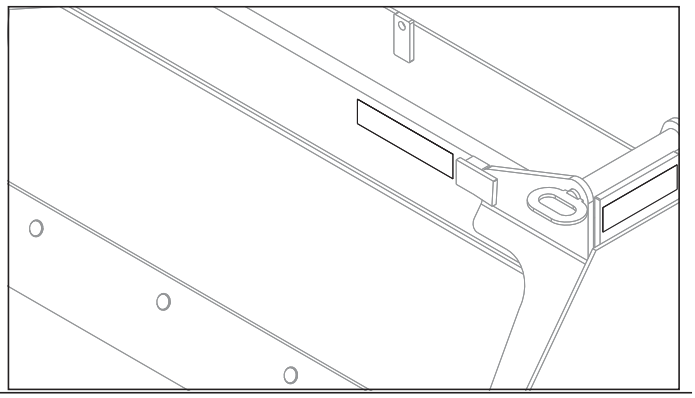

P/N 528938

Orange Reflector

Rear of mowboard, both sides.

QTY. 2

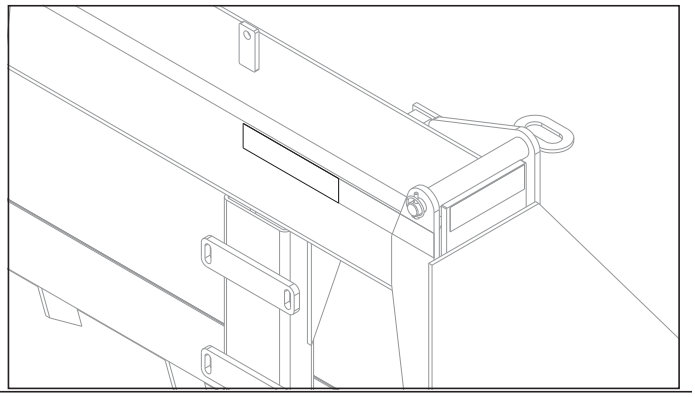

P/N 528938

Orange Reflector

Rear of weight box, inside, both sides.

QTY. 2

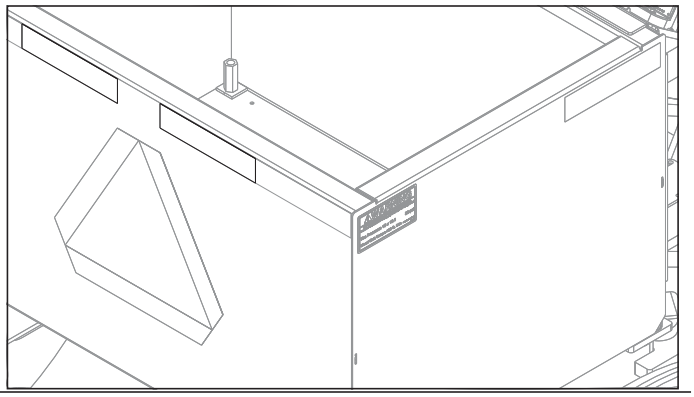

P/N 828933

Red Reflector

Rear of weight box, outside, both sides.

QTY. 2

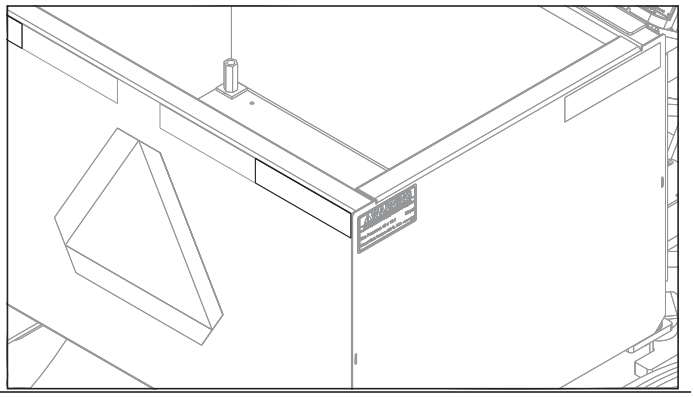

P/N 828933

Red Reflector

Rear mowboard, back, end, both sides.

QTY. 4

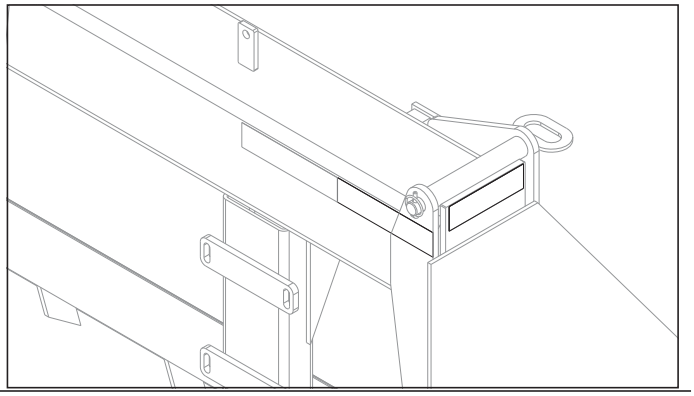

P/N 4000335

SMV Emblem

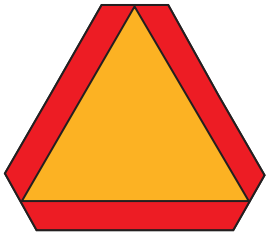

Rear side of weight box.

QTY. 1

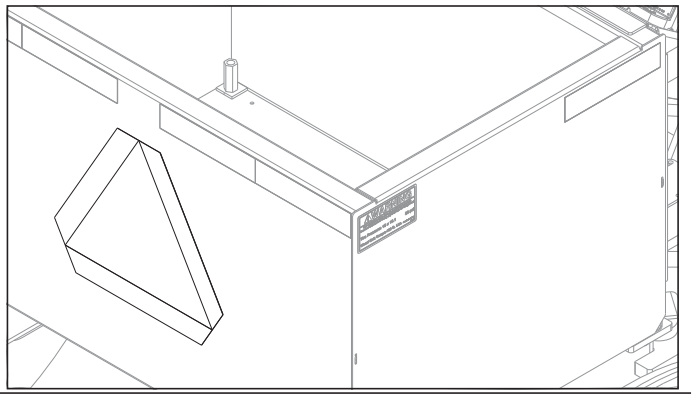

Chapter 2

Standard Specifications

Introduction

This manual is compiled as a guide for owners and operators of the 1432/1432RS/1632/1632RS Grader. Read it carefully so as to be able to follow the suggestions made. Please take time to understand the proper maintenance schedule and SAFE operation of your equipment.

In the event that a new and inexperienced operator is placed in charge of running the equipment, they should read and understand, that part of the manual for proper maintenance and SAFE operation, and to be trained in regard by an experienced operator.

Owner Assistance

If customer service or repairs are needed, contact your Landoll dealer. They have trained personnel, parts and service equipment specially designed for Landoll products. Your machine's parts should only be replaced with Landoll parts. Have the Serial Number and complete Model Number available ***See Figure 2-1*** when ordering parts from your Landoll dealer.

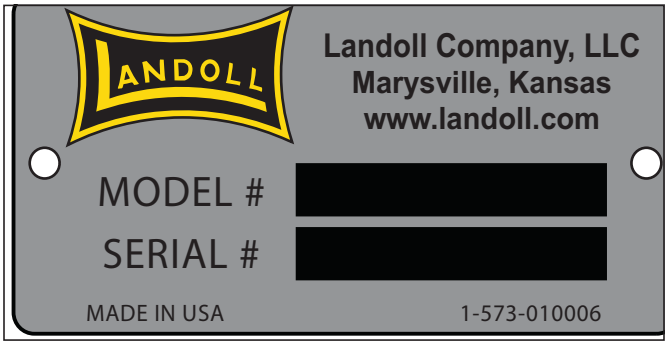

Figure 2-1: ID Plate

Warranty Registration

Be certain to register the Grader Online registration at *www.landoll.com* within 10 days of purchase or lease, in order to be on file at Landoll and eligible for Warranty.

Take time to read and understand the Warranty for this product, ***See Figure 2-2***.

Landoll reserves the right to make changes and/or add improvements to it's products at any time without obligation to previously manufactured equipment.

Please take time to complete the following information for your personal reference, should you need to contact your Dealer with questions or parts needs.

MODEL_____

SERIAL #_____

DATE OF PURCHASE_____

DEALER NAME_____

We at Landoll wish to thank you for purchasing our product. We have spent considerable time and effort to research, design, test and develop this machine and are confident it will serve you in the use for which it was designed.

LANDOLL COMPANY, LLC

Product Warranty

LANDOLL COMPANY, LLC, 1600 W. 8th St., Beloit KS, 67420

Landoll Company, LLC shall Warrant workmanship and materials on the ***ICON Farm Products*** for a period of 12 months from the date of original purchase, lease, or rental, from the original Dealer, and in accordance with the following terms and conditions:

- Should any part or component fail within the Warranty period, and under normal use conditions, Landoll Company, LLC shall supply a new part or component for replacement through the original Dealer. Cost of normal ground freight, for that part or component to the Dealer, shall be paid by Landoll Company, LLC. Repair and replacement labor cost, from the original Dealer, shall be paid by Landoll Company, LLC at a rate negotiated by Landoll Company, LLC.
- No further expense shall be paid by Landoll Company, LLC, including but not limited to, loss of time or income.

Landoll Company, LLC shall not provide Warranty on any part or component that has failed due to abuse, misuse, alteration, improper maintenance, or normal wear. Failure occurring while being pulled by a tractor in excess of engine horsepower, as described in the owners manual and/or posted on the machine, is considered abuse and misuse and shall not receive Warranty. Warranty applies only to normal, intermittent agricultural use, and not commercial or industrial use.

In regard to some components manufactured by other companies and sold by Landoll Company, LLC, including but not limited to tires, said Warranty shall be provided solely by that manufacturing company.

This Warranty applies to products sold in the United States and Canada, and is made expressly in place of all other warranties, expressed or implied.

LAN-0207
Rev: 000
Rev Date:9/25/24

Figure 2-2: Landoll Tillage Warranty

General Torque Specifications

LANDOLL
FASTENER TORQUE SPECIFICATIONS
(Rev. 23/04)

This chart provides general torque specifications for Standard Nuts and Caps Screws (as received condition) that are not called out on processes or drawings.

This **DOES NOT** apply if special lubrication such as graphite moly-disulfide or other extreme pressure lubricants are used.

Add 33% to the listed torque specification if the fastener is dry (solvent cleaned).

Cap screw grades are indicated by markings on the head, these vary among manufacturers.

Thick Nuts must be used on grade 8 cap screws.

SAE TORQUE SPECIFICATIONS (FOOT-POUNDS)

[ ] Indicates specifications for Prevailing Torque Nuts.

UNC Size	Grade 2	Grade 5	Grade 8
1/4 - 20	4 [5]	6 [7]	9 [11]
5/16 - 18	8 [10]	13 [16]	18 [22]
3/8 - 16	15 [19]	23 [29]	35 [43]
7/16 - 14	24 [30]	35 [43]	55 [62]
1/2 - 13	35 [43]	55 [62]	80 [100]
9/16 - 12	55 [62]	80 [100]	110 [137]
5/8 - 11	75 [94]	110 [137]	170 [212]
3/4 - 10	130 [162]	200 [250]	280 [350]
7/8 - 9	125 [156]	320 [400]	460 [575]
1 - 8	190 [237]	408 [506]	680 [850]
1-1/8 - 7	270 [337]	600 [750]	960 [1200]
1-1/4 - 7	380 [475]	840 [1050]	1426 [1782]
1-3/8 - 6	490 [612]	1100 [1375]	1780 [2225]
1-1/2 - 6	650 [812]	1460 [1825]	2360 [2950]

See back side for SAE UNF and Metric torques.

Form No. F-257-0322

SAE TORQUE SPECIFICATIONS (FOOT POUNDS)

[ ] Indicates specifications for Prevailing Torque Nuts.

UNF Size	Grade 2	Grade 5	Grade 8
1/4 - 28	5 [6]	7 [9]	10 [12]
5/16 - 24	9 [11]	14 [17]	20 [25]
3/8 - 24	17 [21]	25 [31]	35 [44]
7/16 - 20	27 [34]	40 [50]	60 [75]
1/2 - 20	40 [50]	65 [81]	90 [122]
9/16 - 18	60 [75]	90 [112]	130 [162]
5/8 - 18	85 [106]	130 [162]	180 [225]
3/4 - 16	150 [188]	220 [275]	320 [400]
7/8 - 14	140 [175]	360 [450]	500 [625]
1 - 14	210 [263]	540 [675]	760 [950]
1-1/8 - 12	300 [375]	660 [825]	1080 [1350]
1-1/4 - 12	420 [525]	920 [1150]	1500 [1875]
1-3/8 - 12	560 [700]	1260 [1575]	2010 [2512]
1-1/2 - 12	730 [912]	1640 [2050]	2660 [3325]

METRIC TORQUE SPECIFICATIONS

This chart provides torque specification for phosphate coated, Rockwell "C" 38-45 Metric Coarse Thread Class 10.9 Fasteners, Class 10.0 Nuts and Harden Flat Washers.

[ ] Indicates specifications for Prevailing Torque Nuts.

MM Size	Newton - Meters	Foot-Pounds
6	10 [14]	7 [10]
7	16 [22]	12 [16]
8	23 [32]	17 [24]
10	46 [60]	34 [47]
12	80 [101]	60 [75]
14	125 [155]	90 [115]
16	200 [240]	150 [180]
18	275 [330]	205 [245]
20	385 [450]	290 [335]
24	670 [775]	500 [625]
27	980 [1105]	730 [825]
30	1330 [1470]	990 [1090]
33	1790 [1950]	1730 [1870]
36	2325 [2515]	1730 [1870]
39	3010 [3210]	2240 [2380]

See front side for SAE UNC and notes.

Figure 2-1: General Torque Specifications

Hydraulic Fitting Torque Specifications

LANDOLL
HYDRAULIC FITTING TORQUE SPECIFICATIONS
(REV. 23/04)
AEROQUIP BRAND FITTINGS
37° JIC; ORS & ORB

This chart provides torque specifications for Plated Carbon Steel and Stainless Steel Fittings (as received condition) that are not called out on processes or drawings.

This **DOES NOT** apply if special lubrication such as graphite moly-disulfide or other extreme pressure lubricants are used.

Minus 65% from the listed torque specification for Brass Fittings.

TORQUE SPECIFICATIONS (FOOT-POUNDS)
[ ] Indicates specifications for Prevailing Torque Nuts.

DASH Size	37 Degree JIC	O-Ring (ORS)	O-Ring Boss (ORB)
-4	11-12	10-12	14-16
-5	15-16	-----	18-20
-6	18-20	18-20	24-26
-8	38-42	32-35	50-60
-10	57-62	46-50	72-80
-12	79-87	65-70	125-135
-14	-----	-----	160-180
-16	108-113	92-100	200-220
-20	127-133	125-140	240-280
-24	158-167	150-165	270-360
-32	245-258	-----	-----

FORM NO. F-263-2304 (1 of 3)

LANDOLL
HYDRAULIC FITTING TORQUE SPECIFICATIONS
(REV. 23/04)
GATES BRAND FITTINGS
37° JIC; ORS & ORB

This chart provides torque specifications for Plated Carbon Steel and Stainless Steel Fittings (as received condition) that are not called out on processes or drawings.

This **DOES NOT** apply if special lubrication such as graphite moly-disulfide or other extreme pressure lubricants are used.

Minus 65% from the listed torque specification for Brass Fittings.

TORQUE SPECIFICATIONS (FOOT-POUNDS)
[ ] Indicates specifications for Prevailing Torque Nuts.

DASH Size	37 Degree JIC	O-Ring (ORS)	O-Ring Boss (ORB)
-4	10-11	10-12	14-16
-5	13-15	-----	-----
-6	17-19	18-20	24-26
-8	34-38	32-40	37-44
-10	50-56	46-56	50-60
-12	70-78	65-80	75-83
-14	-----	65-80	-----
-16	94-104	92-105	111-125
-20	124-138	125-140	133-152
-24	156-173	150-180	156-184
-32	219-243	-----	-----

FORM NO. F-263-2304 (2 of 3)

LANDOLL
HYDRAULIC FITTING TORQUE SPECIFICATIONS
(REV. 23/04)
PARKER BRAND FITTINGS
37° JIC; ORS & ORB

This chart provides torque specifications for Plated Carbon Steel and Stainless Steel Fittings (as received condition) that are not called out on processes or drawings.

This **DOES NOT** apply if special lubrication such as graphite moly-disulfide or other extreme pressure lubricants are used.

Minus 65% from the listed torque specification for Brass Fittings.

TORQUE SPECIFICATIONS (FOOT-POUNDS)
[ ] Indicates specifications for Prevailing Torque Nuts.

DASH Size	37 Degree JIC	O-Ring (ORS)	O-Ring Boss (ORB)
-4	11-13	15-17	13-15
-5	14-16	-----	21-23
-6	20-22	34-36	25-29
-8	43-47	58-62	40-44
-10	55-65	100-110	58-62
-12	80-90	134-146	75-85
-14	-----	-----	-----
-16	115-125	202-218	109-121
-20	160-180	248-272	213-237
-24	185-215	303-327	238-262
-32	250-290	-----	310-340

FORM NO. F-263-2304 (3 of 3)

Figure 2-3: Hydraulic Fitting Torque Specifications

Model Specification

Specification		
	Model 1432/1432RS	Model 1632/1632RS
Blade Size	14’ W X 32” H	16’ W X 32” H
Replaceable Cutting Edge	1/2” X 6” X 7’	1/2” X 6” X 8’
Blade Swing Left/ Right	50°	50°
Blade Tilt Side to Side	15°	15°
Blade Clearance at Full Raised	18”	18”
Length Overall	23’	23’
Width Overall with hydraulics attached	9’ - 6”	9’ - 6”
Transport Width with hydraulics Unpinned	8’ - 4”	8’ - 4”
Shipping Weight (With out Concrete)	5,100lbs/5,460lbs.	5,300lbs/5,660lbs.
Concrete Option Weight	2,430lbs.	2,430lbs.
Cylinders Welded Industrial -Blade Swing	5” X 24”	5” X 24”
Cylinders Welded Industrial - Tilt	4” X 12”	4” X 12”
Cylinders Welded Industrial - Raise/Lower	4” X 16”	4” X 16”
Cylinders Welded Industrial - Rear Steer	4” X 16”	4” X 16”
Hydraulic Hoses	3,000 psi rated	3,000 psi rated
Hitches	pintle style	pintle style
Grease Locations	9/10	9/10
Safety Warning Lights	Standard LED	Standard LED
Hub & Spindle	8 Bolt 7500 lbs.	8 Bolt 7500 lbs
Specifications are subject to change without prior notification.		

Tire Inflation

Tire Size	Tire Manufacturer	Ply/Load Rating	Inflation Pressure (Psi) (Max.)
19L x 16.1 12 ply	Firestone or equivalent	Farm Implement Tread 6600 lbs. @ 30 mph	36 psi

Recommended Bolt Torque Specification

Bolt Size	Torque (FT. LBS.)
5/8-18 Lug Nuts	85- 100 Ft-Lbs.

Assembly and Lubrication

Assembly and Lubrication Check List

1. Install and pin pivot frame to tongue frame.
2. Pin rear frame to center pivot frame
3. Attach grader hitch and assure proper movement.
4. Install pivot pins, and insert all retaining clips.
5. Install lift/tilt pivot cylinders. Install all cylinder pins and retaining clips.
6. Install box ends and components. Fold and check to assure they function properly.
7. Install axle and wheel components. Visually inspect tires.
8. Route hydraulic lines and tighten.
9. Install safety lighting components, route wiring, and install plug retainer. Cycle and check lighting system with 12 volt system tester.
10. Lubricate all moving components with high temp grease.
11. Fill hydraulic systems with Mobil 424 hydraulic oil using hydraulic pump, activate all moving parts and bleed air from the system. Hold 3000 psi. hydraulic pressure against all cylinders, fittings, and hoses.
12. Check hydraulic components for leaks.
13. Recheck that all retainers are installed.
14. Assure the rear steer components function properly.
15. Clean and touch up paint the machine.
16. Attach operators manual and container.
17. Apply the safety, operations, and lube identification decals. Attach plastic envelope with warranty info, and this check list, at the front of the hose holder.
18. For ease of transporting, assure that the blade is level, and in the transport position before leaving shop.

Lubrication Maintenance

1. ***Table 3-1*** specifies the number and the period of lubrication points on the 1432/1432RS/1632/1632RS Grader. Proper maintenance of your machine will, under normal operating conditions, help to keep it operating at or near its peak performance for an extended period of time. Proper maintenance is also a condition of keeping your warranty in good status ***See Figure 3-1*****.**
2. When lubricating the 1432/1432RS/1632/1632RS, SAE multi-purpose EP grease, or EP grease with 3-51432 molybdenum sulfide is recommended. Wipe soil from fittings before greasing. Replace any lost or broken fittings immediately.
3. Regular lubrication will extend service life, particularly in severe operating conditions.

Storage

1. The service life of the 1432/1432RS/1632/1632RS Grader will be extended by proper off-season storage practices. Prior to storing the unit, complete the following procedures:
   a. Completely clean the unit.
   b. Inspect the machine for worn or defective parts. Replace as needed.
   c. Repaint all areas where the original paint is worn off.
   d. Grease all exposed metal surfaces of shanks, points and discs.
   e. Apply a light coating of oil or grease to exposed cylinder rods to prevent them from rusting.
   f. Lubricate each point of the machine as stated in ***"Lubrication Maintenance" on page 3-1*****.**
2. Store the unit in a shed or under a tarpaulin to protect it from the weather. The ground tools and tires should rest on boards, or some other object, to keep them out of the soil.

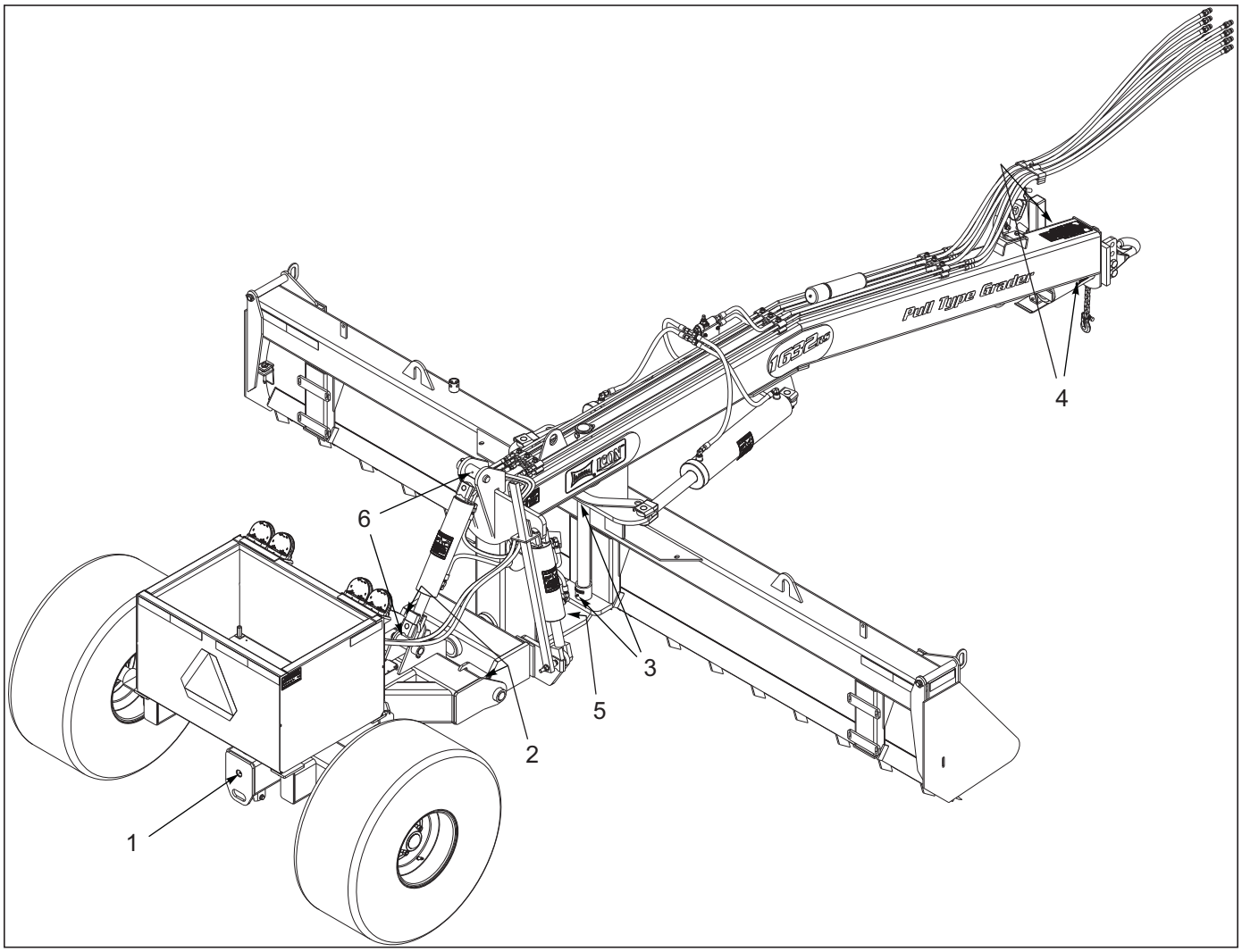

Figure 3-1: Lubrication Schedule

LUBRICATION TABLE			
ITEM	DESCRIPTION	NO. OF LUBE POINTS	INTERVAL
1	REAR AXLE PIVOT	1	DAILY
2	REAR AXLE SUPPORT PIN	2	DAILY
3	CENTER BLADE PIN	2	DAILY
4	HITCH PIVOT	2	DAILY
5	CENTER PIVOT	1	DAILY
6	LIFT CYLINDER PIN	2	DAILY

Table 3-1: Lubrication Table

Hookup and Operation

Description of Machine

The 1432/1432RS/1632/1632RS Grader utilizes 3 or 4 hydraulic valves on the tractor, allowing it to function in four different directions.

The Grader has the ability to:

- raise to a clearance from bit to ground of 30 inches while lowering to a negative cut.
- tilt from side to side approximately 15 degrees to accomplish slope cuts and ditching.
- swing of the blade approximately 50 degrees, left or right,
- control of the rear steer, 5' in either direction. All of these functions can be done on the go, or while the grader is stopped.

Tie Strap Designations

Color coded tie straps and markers are attached at the tip end of the hoses to identify the four pairs of hydraulic lines to the grader.

- Black tie is used on the hoses that raise and lower of the blade.
- Yellow tie is used on hoses that tilt of the blade.
- White tie is used on hoses that swing of the blade.
- Blue tie is used on hoses that shift the rear.

NOTE

The decal is located on the tongue of the machine ***(See Figure 4-1)***

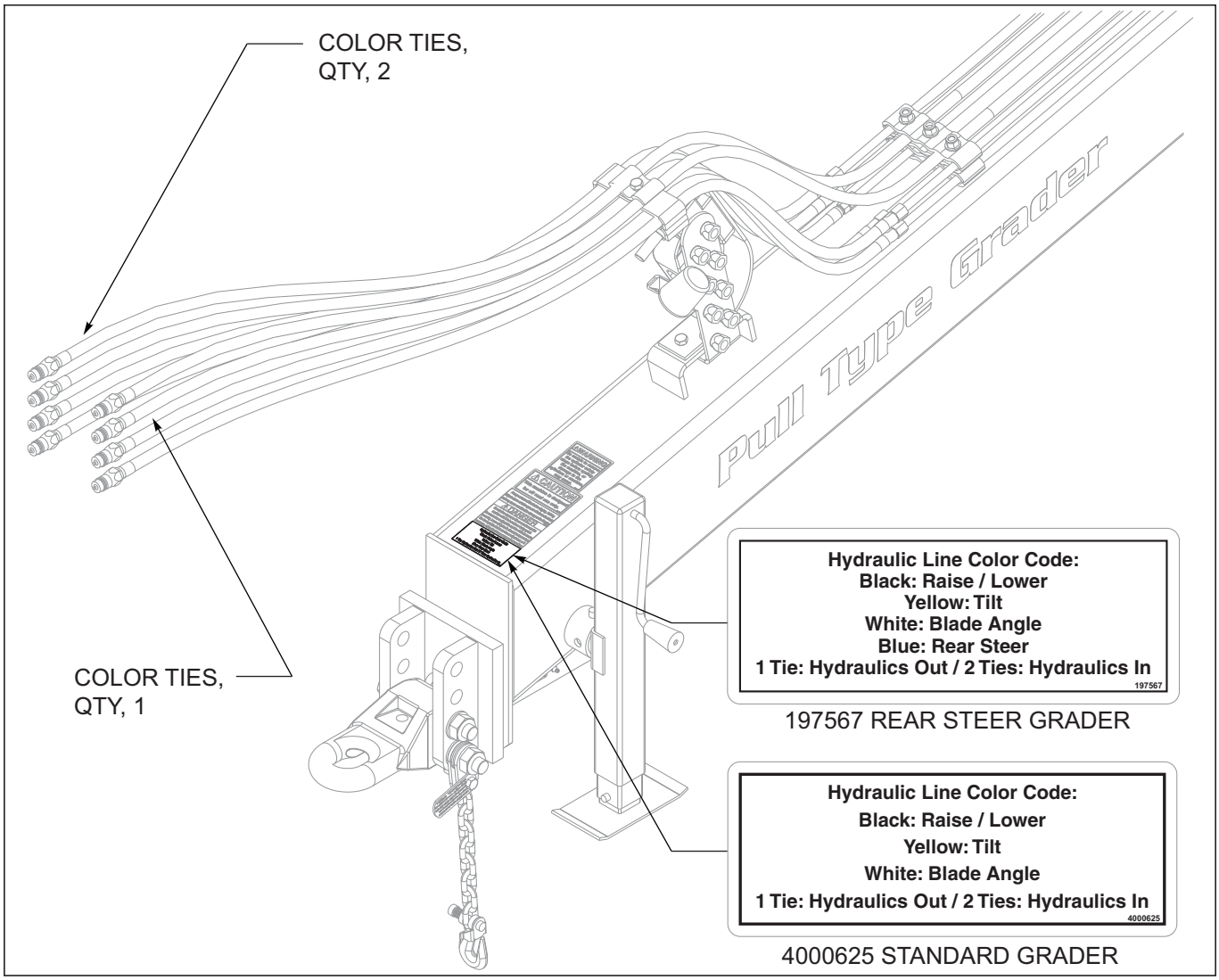

Figure 4-1: Tie Strap Designations

Hookup to the Remote

Hookup of the hydraulic hoses to the remote can be done in any way to suit individual needs. The following method is suggested: Raise/Lower of the blade to #1 valve. Tilt of the blade to #2, and swing of blade to #3, and #4 to control rear steer.

WARNING

Before angling the blade, make sure the grader is taken out of transport position. And be certain that the cylinder stops are removed before use.

CAUTION

When digging in a populated area, it is recommended that a call be made to area utilities to establish the local of any buried pipes, lines, or structures. When digging in open area, research and know the local of any underground structures and objects.

Striking the blade and bit against surface or buried objects can cause damage to the grader and is considered as abuse to the machine.

NOTICE

Operator abuse will not be a warranty item.

Learning to Operate the Grader

Be patient for the first few hours of learning to operate the grader. Time and experience will produce expert results. Any type of blade machine has the tendency to create a “washboard” effect if grading is done with too much speed. Slow down and do the job right. The second tendency of any blade machine is to side draft if the blade is cutting deep and enough power is applied. Practice centering the cut on the blade to balance the draft. Operating the Grader at a higher speed may not get the job done quicker, and may provide less than quality results. It is also recommended that the weight box be filled prior to use. This will also aid in preventing side draft, and bounce.

Responsible operation and proper maintenance will provide many hours of expert results and a durable machine.

CAUTION

This machine is not intended for highway use, it should be used off road only.

If public roadway travel is necessary, be certain of regulations concerning width, lighting, and safety chain requirements.

Illustrated Parts List

General Assembly

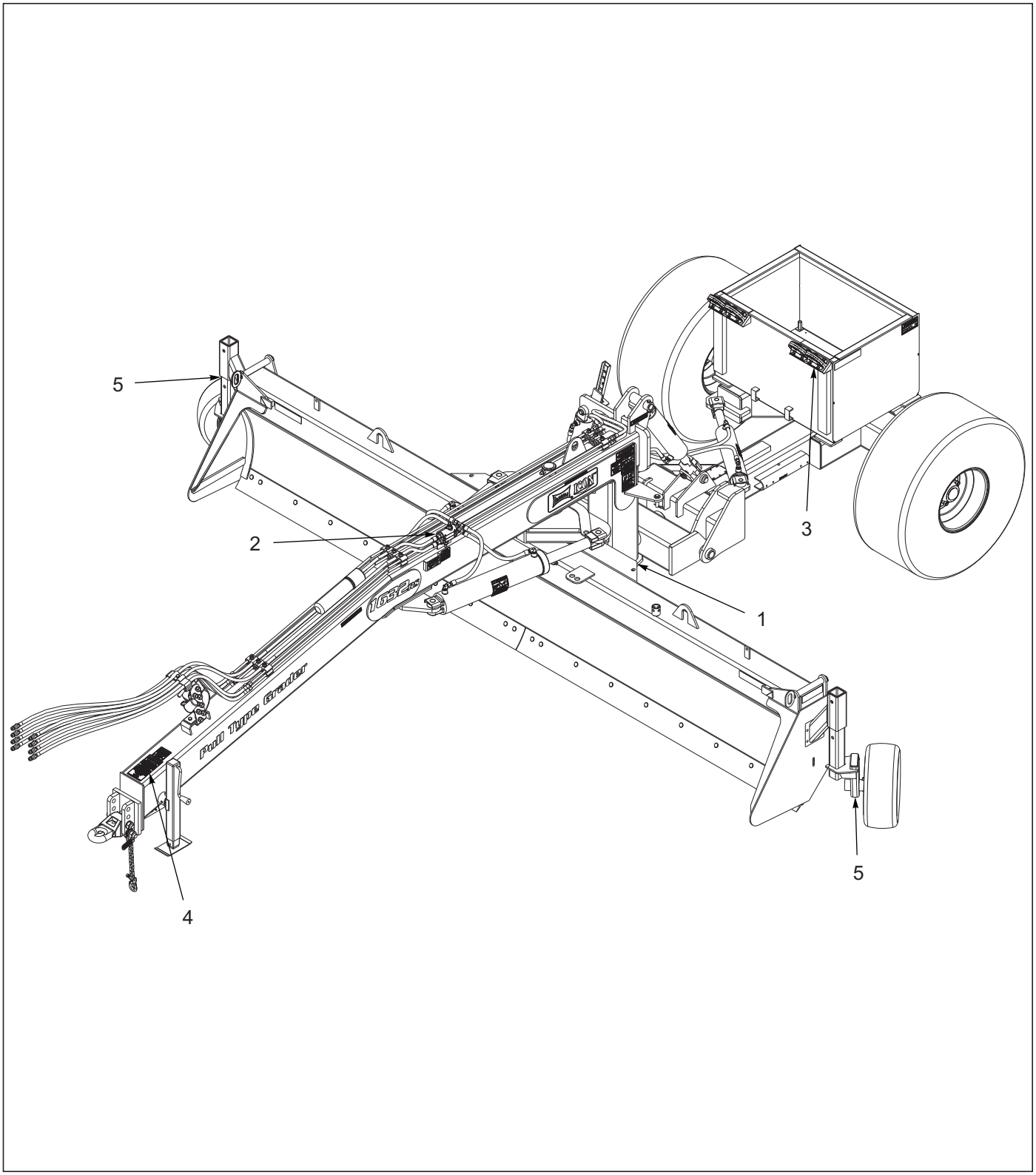

Figure 5-1: General Assembly

General Assembly

ITEM	PART NUMBER	DESCRIPTION	QTY
1	5-3 - 5-17	GRADER ASSEMBLY	
2	5-19 - 5-27	HYDRAULICS	
3	5-28 - 5-31	ELECTRICAL	
4	5-33	DECALS	
5	5-37 - 5-39	GAUGE WHEEL **(OPTION)**	

Grader Assembly Rear

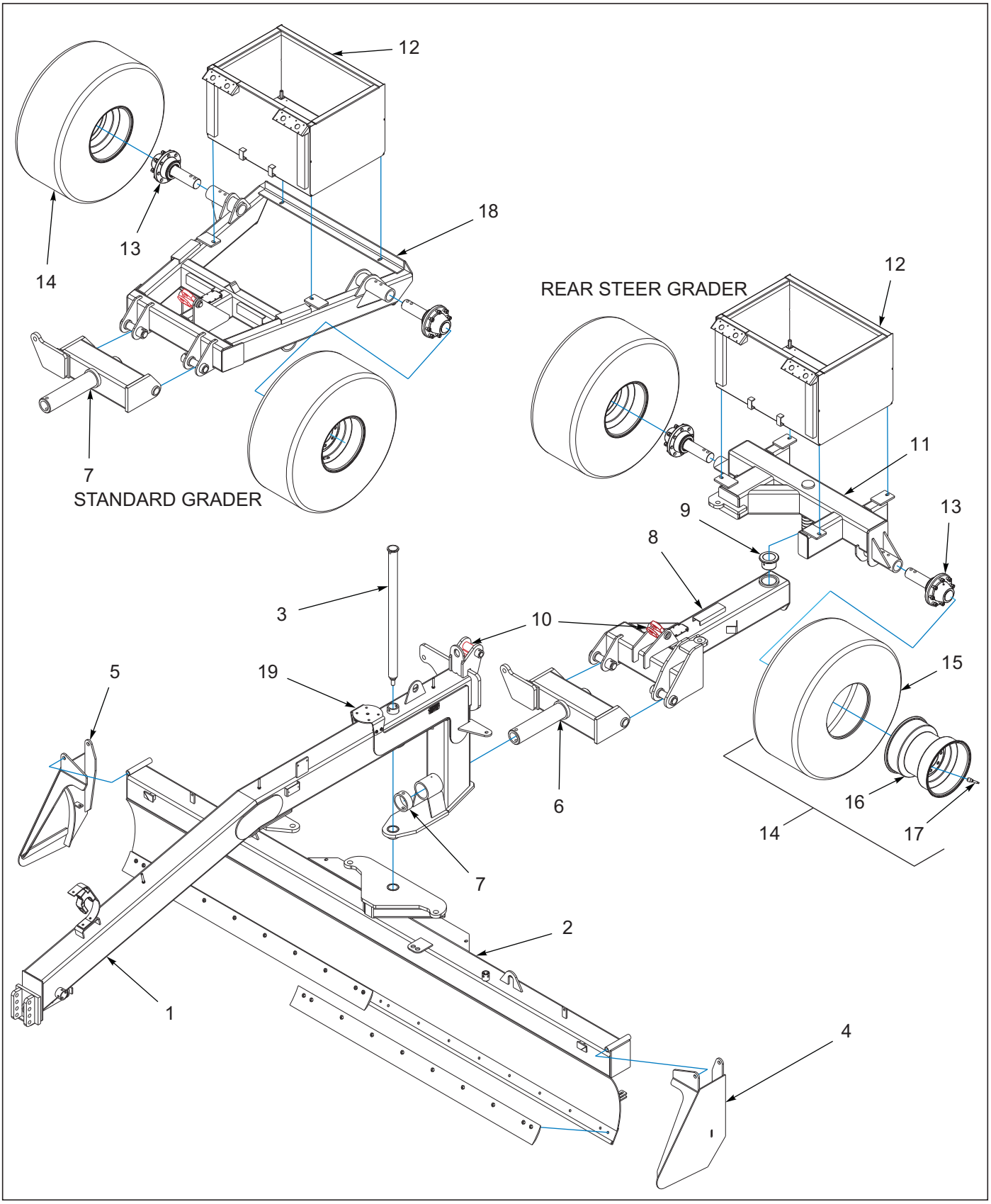

Figure 5-2: Grader Assembly Rear

Grader Assembly Rear

ITEM	PART NUMBER	DESCRIPTION	QTY
1	ICO2183	TONGUE WLDMT FRAME 1632	1
2	ICO2205	1432 MOWBOARD	1
2	ICO2182	1632 MOWBOARD WLDMT	1
3	GRA2044	UG16 PIN WLDMT CENTER BLADE	1
4	ICO2154	ICON 1632 BOX END LEFT	1
5	ICO2153	ICON 1632 BOX END RIGHT	1
6	ICO1051	CENTER PIVOT FRAME WLDMT UG16	1
7	ICO1069	AG16C CENTER PIVOT RETAINER	1
8	ICO2324	REAR STEER WLDMT	1
9	4001271	BUSHING 4 OD-3.5 ID SM.FLANGED	2
10	ICO1075	PIVOT WLDMT CYLINDER	2
11	ICO2325	AXLE WLDMT REAR STEER	1
12	ICO2187	WLDMT, WEIGHT BOX 1632	13
13	------	HUB/AXLE ASSY **(SEE Pages 5-11 Through 5-15)**	2
14	173240	TIRE AND WHEEL ASSY 19L X 16**. (INCLUDES ITEMS 15-17)**	2
15	4001244	TIRE 19X16.1 GRADER OPTION	1
16	4001245	WHEEL 16X16.1 GRADER OPTION	1
17	TR571	VALVE STEM	1
18	ICO2186	1632 REAR AXLE SUPPORT	1
19	218928	KIT, SINGLE GPS MOUNT, 1632 **(OPTIONAL) (SEE PAGE 5-41)**	1
19	234413	KIT, GRADER GPS MNT,3 POSITION **(OPTIONAL) (SEE PAGE 5-41)**	1

Grader Assembly Front

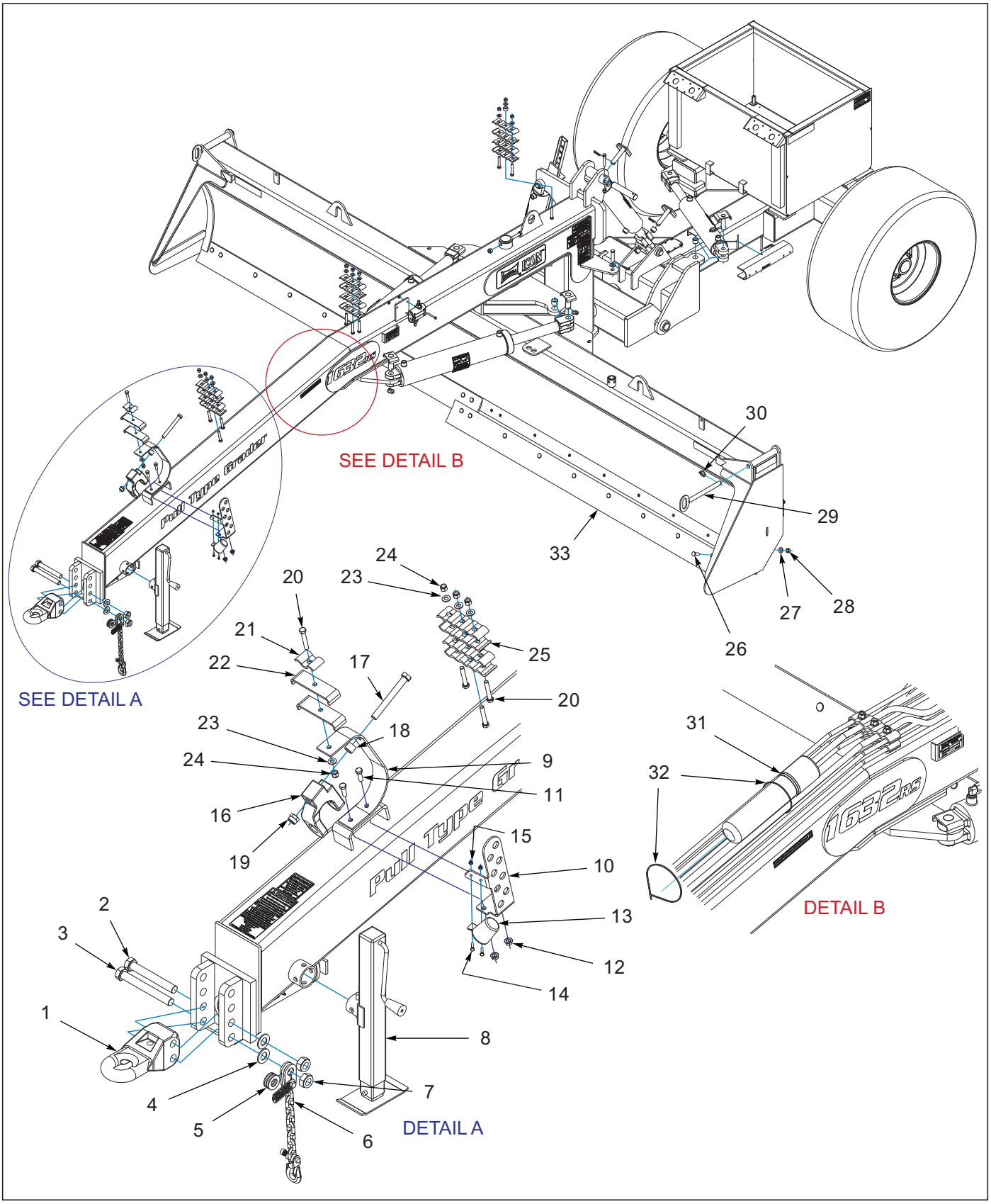

Figure 5-3: Grader Assembly Front

Grader Assembly Front

ITEM	PART NUMBER	DESCRIPTION	QTY	
--	-----	1432 GRADER	*	
--	-----	1632 GRADER		*
1	4001501	HITCH, PINTLE CAST, CAT III HD	1	1
2	1-654-010125-20	SCREW,1-8UNCX7-1/2 HX CP GR8	1	1
3	1-654-010125-22	SCREW HX CP 1-8UNCX8-1/2G8ZP	1	1
4	622-3511-010	WASHER, FLAT 1" MIL-CARB SAE	2	2
5	1-861-010032-24	WASHER FL 1IN NARROW ZP	3	3
6	141434	SAFETY CHAIN 21,000LB	1	1
7	118652	NUT HX SLFLKG W/NYL 1-8 ZP	2	2
8	140647	JACK, SIDE WIND 7000/8000 LB **(SEE PAGE 5-17)**	1	1
9	ICO0004	HOSE STAND 1/4x2.5x24	1	1
10	202230	PLATE, HYD HOSE HOLDER	1	1
11	1-654-010055-03	SCREW,HEX CAP,1/2-13UNCX1-1/2	2	2
12	1-510-010003-09	NUT,1/2-13 FLANGE HD,SERRATED	2	2
13	2-368-010287	HARNESS, STOR-A-WAY	1	1
14	1-654-010047-06	SCREW,HX CP 1/4-20UNCX1 GR5	2	2
15	1-512-010005-01	NUT,HEX,SLFLKG GRB 1/4-20	2	2
16	4001503	HITCH TONGUE CAST U CLEVIS	1	1
17	120876	SCREW,HEXCAP,3/4-10X6-1/2 GR8	1	1
18	9602016	RD TUBE,1-1/8 OD X .78 ID X7/8	1	1
19	110-0238	3/4-10 ESNA NUT ZP 41NE-120	1	1
20	1-654-010055-09	SCREW,HX CP,1/2-13UNCX3 GR5	1	1
21	ICO0226	REAR SIDE PIPE CLAMP	1	1
22	ICO0544	CLAMP, HYD LINE 2X5-1/4	2	2
23	622-3511-005	WASHER, FLAT 1/2 MIL-CARB SAE	4	4
24	W915665-4	NUT, 1/2-13 NYLOCK GR 5 ZP	4	4
25	ICO0223	SIDE PIPE CLAMP	12	12
26	172791	BOLT, PLOW 5/8-11 X 2 GR8	18	20
27	622-3511-007	WASHER, FLAT 5/8 MIL-CARB SAE	18	20
28	63D10ER	NUT HEX 5/8-11 UNC GR8	18	20
29	ICO1096	PIN WLDMT BOX END	2	2
30	134912	PIN, LYNCH 1/4 X 1-1/4	2	2
31	1-116-010019	BOX, MANUAL STORAGE	1	1
32	4000750	CABLE TIE,14" BLACKHD 21047	2	2
33	4000126	CUTTING EDGE, 7' GRADER BLADE	2	--
33	4000127	CUTTING EDGE, 8' GRADER BLADE	--	2

Grader Assembly Bottom

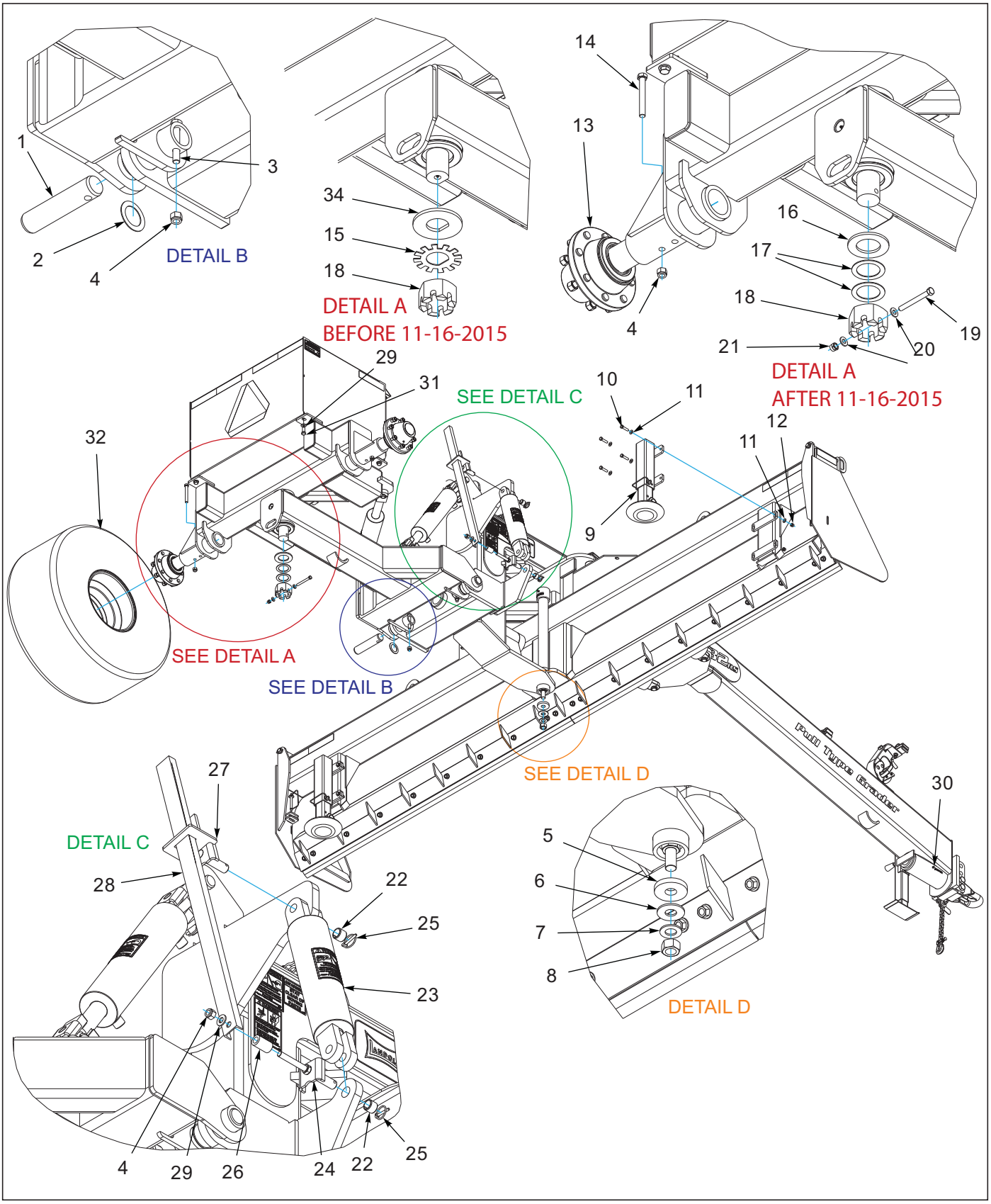

Figure 5-4: Grader Assembly Bottom

Grader Assembly Bottom

ITEM	PART NUMBER	DESCRIPTION	QTY
1	ICO0372	REAR AXLE SUPPORT PIN	2
2	172926	WASHER MACHINE 2	4
3	172829	SCREW HX CP 5/8-11X4 GR8	2
4	103-0625	NUT ESNA 5/8-11	2
5	SCR2160	WASHER LOAD SHARING PIN	1
6	1-861-010032-25	WASHER FL 1IN WIDE ZP	1
7	622-3511-010	WASHER, FLAT 1" MIL-CARB SAE	1
8	172839	NUT HEX 1-8 GR8 ZP	1
9	179183	ASSY, GRADER SNOW/DIRT SKID **(SEE PAGE 5-9)**	2
10	1-654-010055-05	SCREW,HEX CAP,1/2-13UNCX2 GR5	8
11	1-861-010032-14	WASHER, FLAT 1/2" N ZP/CD	16
12	1-510-010003-09	NUT,1/2-13 FLANGE HD,SERRATED	8
13	------	HUB/AXLE ASSY **(SEE Pages 5-11 Through 5-15)**	2
14	172830	SCREW HX CP 5/8-11X5 GR8	2
15	ICO2255	10YD HITCH RETAINER	1
16	622-3511-018	WASHER FLAT 2-1/2 MIL-CARB SAE	1
17	184125	WASHER, GANG SHAFT	2
18	172892	NUT HX SLOT 2-1/2-4 ZP	1
19	179259	SCREW,HX CAP,1/2-13X4-1/2GR8	1
20	622-3511-005	WASHER, FLAT 1/2 MIL-CARB SAE	2
21	1-512-010005-09	NUT,HEX,SLFLKG, 1/2-13 GRB	1
22	2-150-010008	BUSHING 1-1/4ODX1IDX1 STEEL	2
23	4000857	HYDCYL - 4X12W CLEVIS 22-1/4" **(SEE PAGE 5-25)**	1
24	ICO1077	UG16 CYL PIN W/ DEPTH GAUGE MO	1
25	134912	PIN, LYNCH 1/4 X 1-1/4	2
26	ICO1082	AG16C DEPTH GAUGE SPACER	1
27	ICO1076	UG16 CYL PIN W/DEPTH GAUGE SLI	1
28	ICO1079	1632 DEPTH GAUGE	1
29	622-3511-007	WASHER, FLAT 5/8 MIL-CARB SAE	5
30	5000	ZERK FITTING 1/8NPT	1
31	172827	SCREW HX CP 5/8-11X1-1/2 GR8	4
32	173240	TIRE AND WHEEL ASSY 19L X 16.1 **(SEE PAGE 5-3)**	2
33	ICO2254	10YD WEAR WASHER	1

Snow/Dirt Skid Assembly

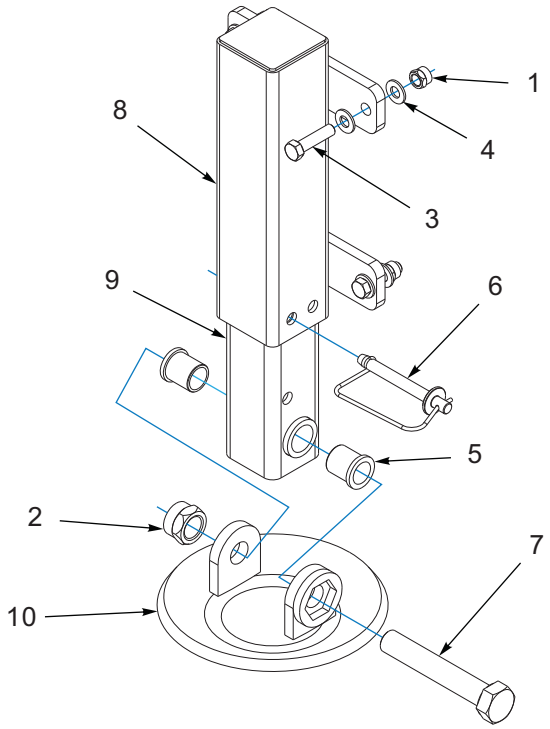

Figure 5-5: Snow/Dirt Assembly

Snow/Dirt Skid Assembly

ITEM	PART NUMBER	DESCRIPTION	QTY
--	179183	ASSY, GRADER SNOW/DIRT SKID	
1	1-512-010005-09	NUT,HEX,SLFLKG, 1/2-13 GRB	2
2	1-512-010005-19	NUT 1-8 HEX SLF-LOCKING GRB	1
3	1-654-010055-05	SCREW,HEX CAP,1/2-13UNCX2 GR5	2
4	1-861-010032-14	WASHER, FLAT 1/2" N ZP/CD	4
5	144264	BEARING FLANGE	2
6	155971	PIN, HARROW ADJ	1
7	172580	SCREW HEX CAP 1-8UNCX6 GR8 ZP	1
8	179184	WLDMT, GRADER SNOW/DIRT SKID	1
9	179187	WLDMT, GRADER SNOW/DIRT SKID	1
10	179190	WLDMT, GRADER SNOW/DIRT SKID	1

Table provided for general use.

NOTES:

Hub/Spindle Assembly (To 02/01/2020)

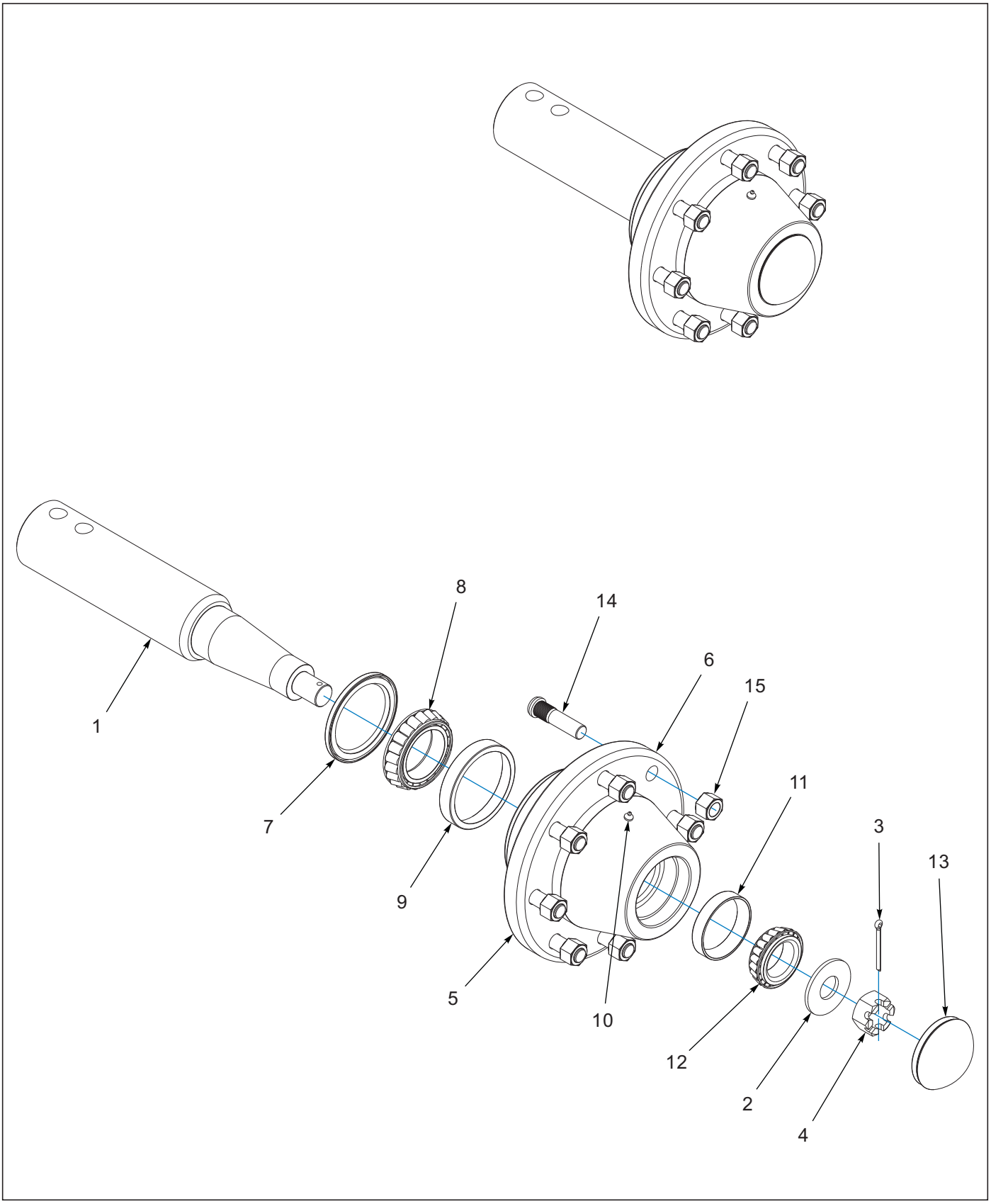

Figure 5-6: Hub/Spindle Assembly (To 02/01/2020)

Hub/Spindle Assembly (To 02/01/2020)

ITEM	PART NUMBER	DESCRIPTION	QTY
	ICO0361	HUB/AXLE ASSY	
1	ICO0360	HD16 AXLE 8500#	1
2	1-861-010032-25	WASHER FL 1IN WIDE ZP	1
3	110-4224	PIN,COTTER-3/16 X 2IN LG	1
4	1-516-010001-20	NUT, HX SLOT 1-14	1
5	4001057	HUB 7500# 8 BOLT SET 75-8	1
6	4001058	HUB 75-8 HUB 281180	1
7	4001062	HUB 80 SEAL CR29968	1
8	4001061	HUB 80 CONE INNER 387AS ARMST	1
9	4001059	HUB 80 CUP INNER ARM 382A	1
10	5000	ZERK FITTING 1/8NPT	1
11	4000580	HUB 80 CUP OUTER LM501310	1
12	4000582	HUB 80 CONE OUTER LM501349	1
13	4000585	HUB 80 HUB CAP1609	1
14	4001060	HUB 75-8 BOLTS 5/8-18 STUD	8
15	4001517	HUB 75-8 NUT 5/8-18	5

Hub/Spindle Assembly (From 02/01/2020 To 06/01/2022)

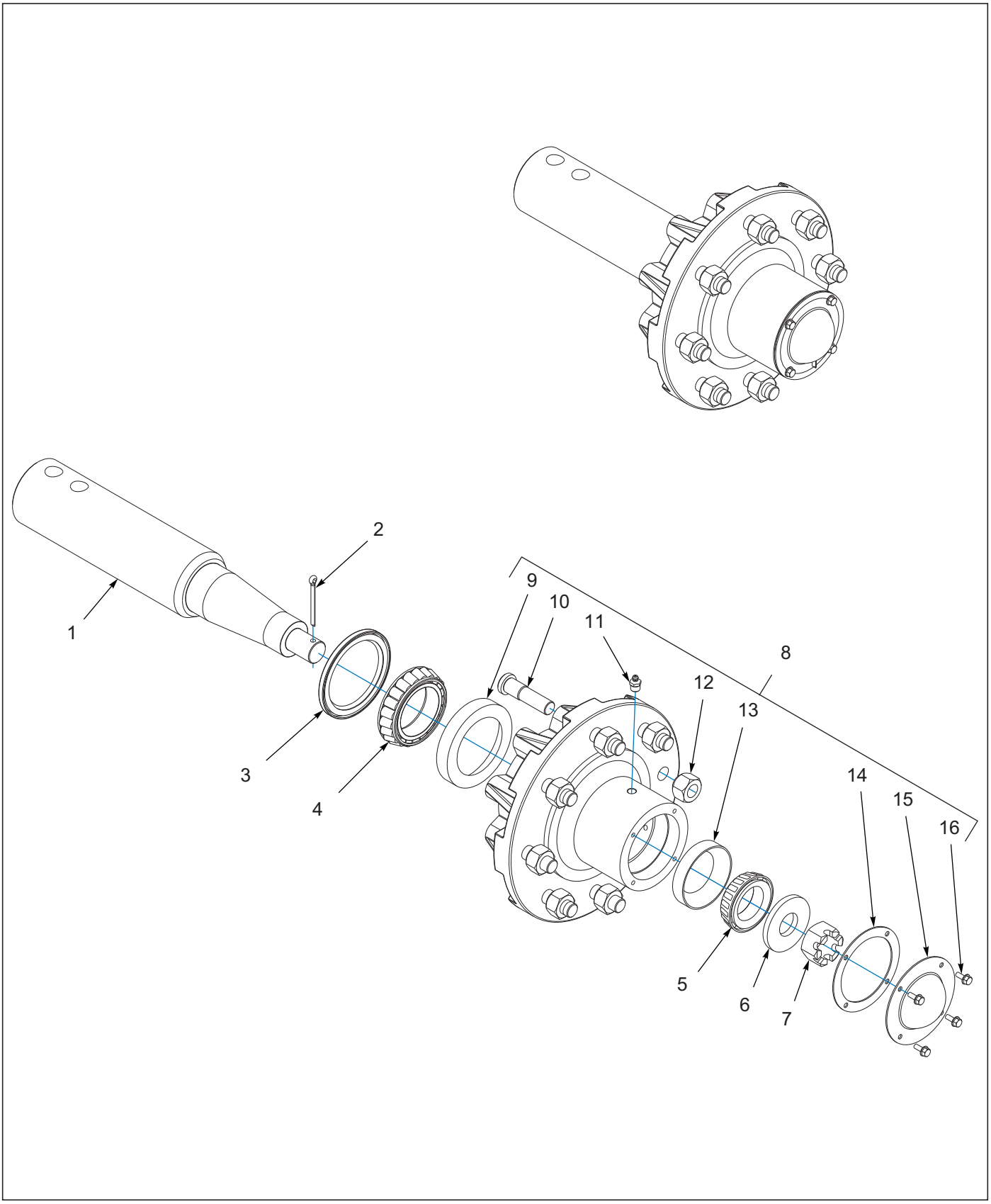

Figure 5-7: Hub/Spindle Assembly (From 02/01/2020 To 06/01/2022)

Hub/Spindle Assembly (From 02/01/2020 To 06/01/2022)

ITEM	PART NUMBER	DESCRIPTION	QTY
--	225503	HUB & SPINDLE ASSY, 8 BOLT	
1	ICO0360	HD16 AXLE 8500#	1
2	110-4224	PIN,COTTER-3/16 X 2IN LG	1
3	4001062	HUB 80 SEAL CR29968	1
4	4001061	HUB 80 CONE INNER 387AS ARMST	1
5	102498	BEARING CONE,OUTER, 1.625	1
6	1-861-010005	WASHER, SPINDLE 1	1
7	1-516-010001-20	NUT, HX SLOT 1-14	1
8	223435	HUB ASSY W/ CUPS,GASKET,CAP **(INCLUDES ITEMS 9-16)**	1
9	111962	OUTER BEARING CUP L20HD#382A	1
10	4001060	WHEEL STUD, 5/8-18UNF X 2-1/2	8
11	5000	ZERK FITTING 1/8NPT	1
12	102600	NUT,WHEEL BOLT, 5/8	8
13	102604	BEARING CUP, OUTER	1
14	223439	GASKET, DUST CAP	1
15	223437	DUST CAP, BOLT ON	1
16	223438	SCREW, 10-32X1/2 HEX FLANGE	4

Hub/Spindle Assembly (From 06/01/2022)

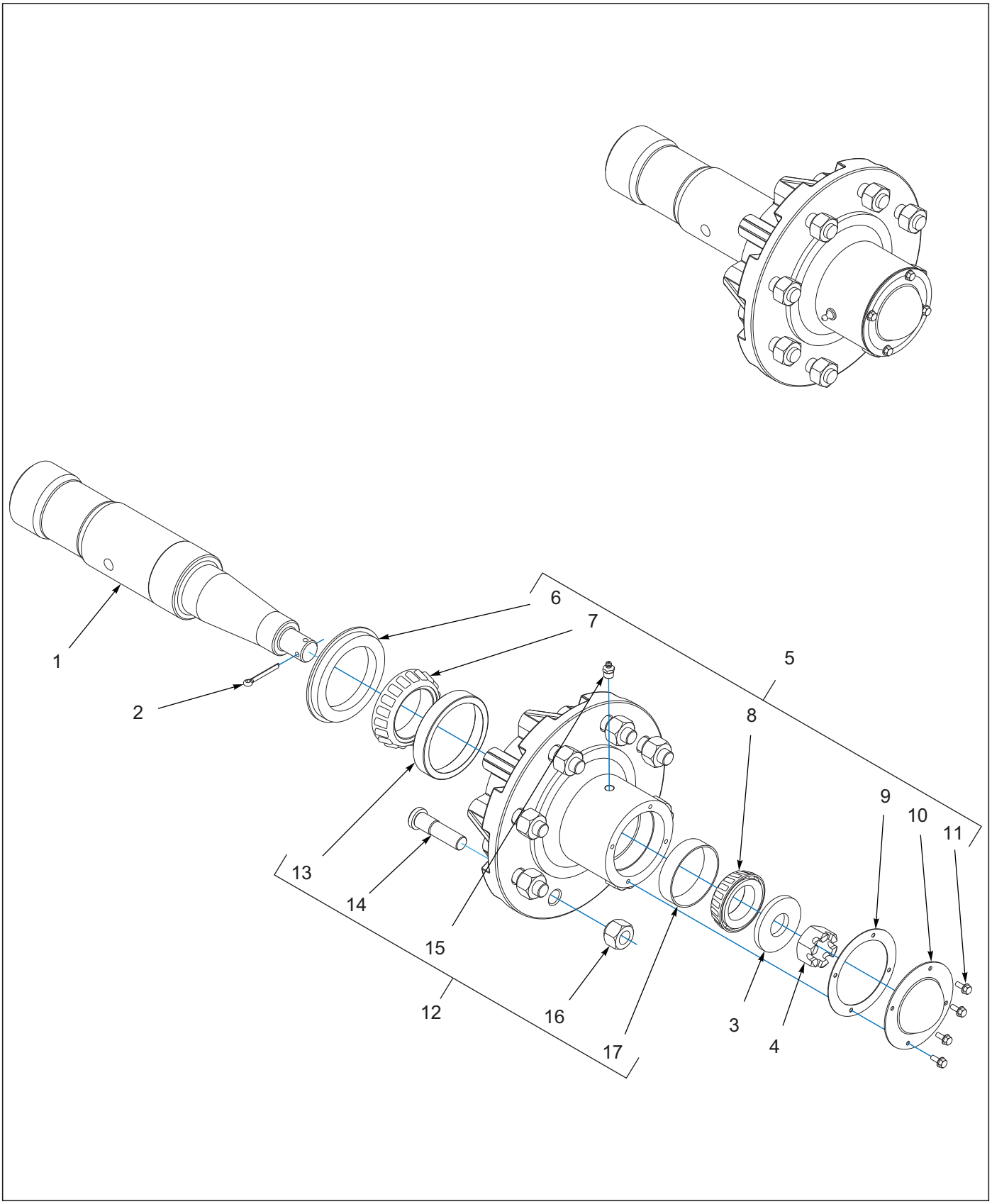

Figure 5-8: Hub/Spindle Assembly (From 06/01/2022)

Hub/Spindle Assembly (From 06/01/2022)

ITEM	PART NUMBER	DESCRIPTION	QTY
--	223440	ASSY, 8 BOLT HUB & SPINDLE **(NOTE: P/N 223440 HUB & SPINDLE WILL REPLACE ALL EXISTING 156972 HUB & SPINDLE ASSEMBLIES)**	
1	156973	SPINDLE 3 X 16-1/2	1
2	1-557-010362-51	PIN, COTTER 3/16X1-1/2	1
3	1-861-010005	WASHER, SPINDLE 1	1
4	1-516-010001-20	NUT, HX SLOT 1-14	1
5	168859	SERVICE KIT, 8-BOLT HUB ASSY **(INCLUDES ITEMS 6-12)**	
6	193089	SEAL, PURGABLE 4 OD X 3 ID	1
7	156979	CONE BEARING - 387AS	1
8	102498	BEARING CONE,OUTER, 1.625	1
9	223439	GASKET, DUST CAP	1
10	223437	DUST CAP, BOLT ON	1
11	223438	SCREW, 10-32X1/2 HEX FLANGE	4
12	223435	HUB ASSY W/ CUPS,GASKET,CAP **(INCLUDES ITEMS 13-17)**	1
13	111962	OUTER BEARING CUP L20HD#382A	1
14	4001060	HUB 75-8 BOLTS 5/8-18 STUD	8
15	5000	ZERK FITTING 1/8NPT	1
16	102600	NUT,WHEEL BOLT, 5/8	8
17	102604	BEARING CUP, OUTER	1

Jack Assembly

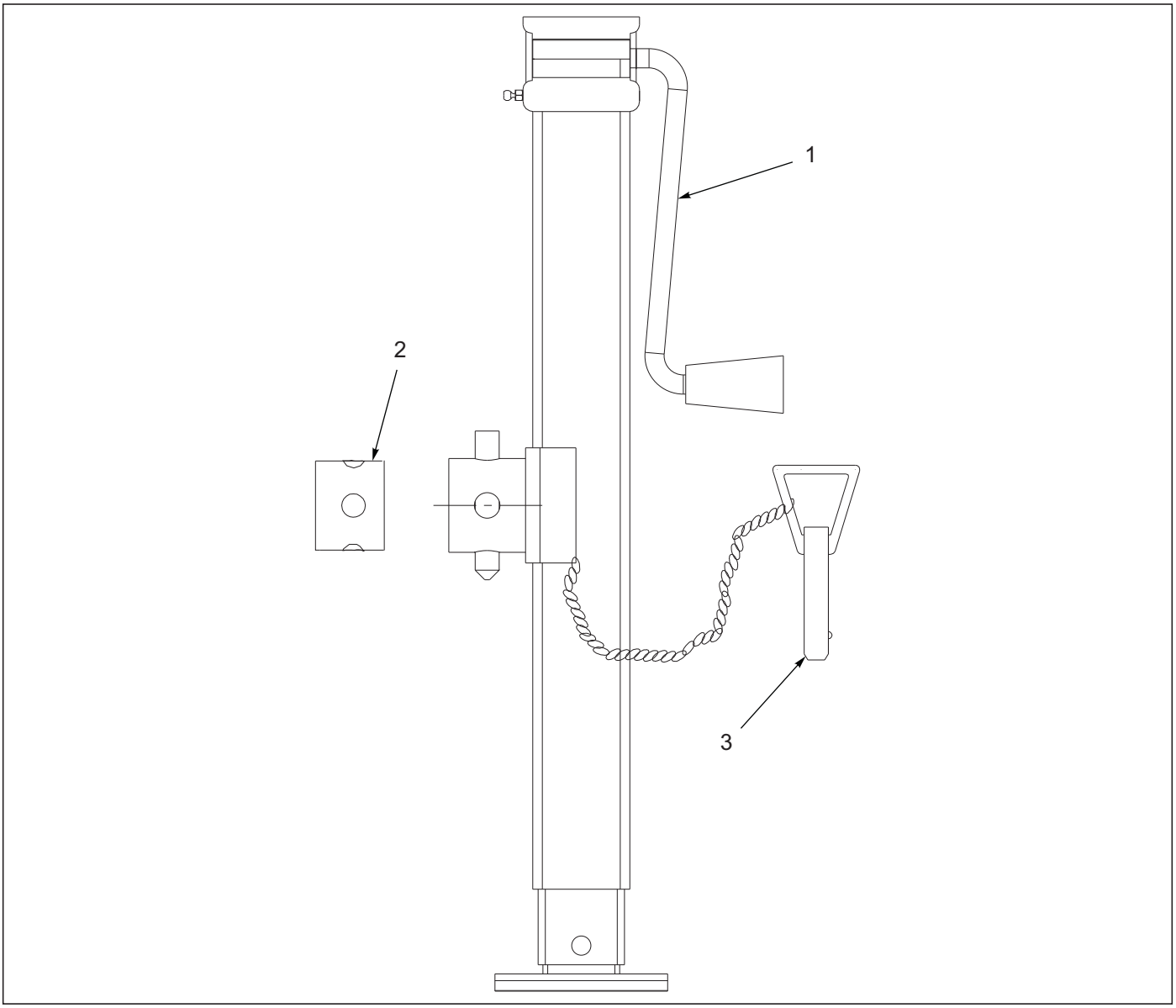

Figure 5-9: Jack Assembly

Jack Assembly

ITEM	PART NUMBER	DESCRIPTION	QTY
--	140647	JACK, SIDEWIND 7000LB	
1	500171	HANDLE FOR JACK	1
2	141250	TUBE, RD, JACK MOUNT **(WELD TO IMPLEMENT FRAME)**	1
3	142194	5/8" PIN	1

Table provided for general use.

NOTES:

Cylinder & Hose Clamp Assembly

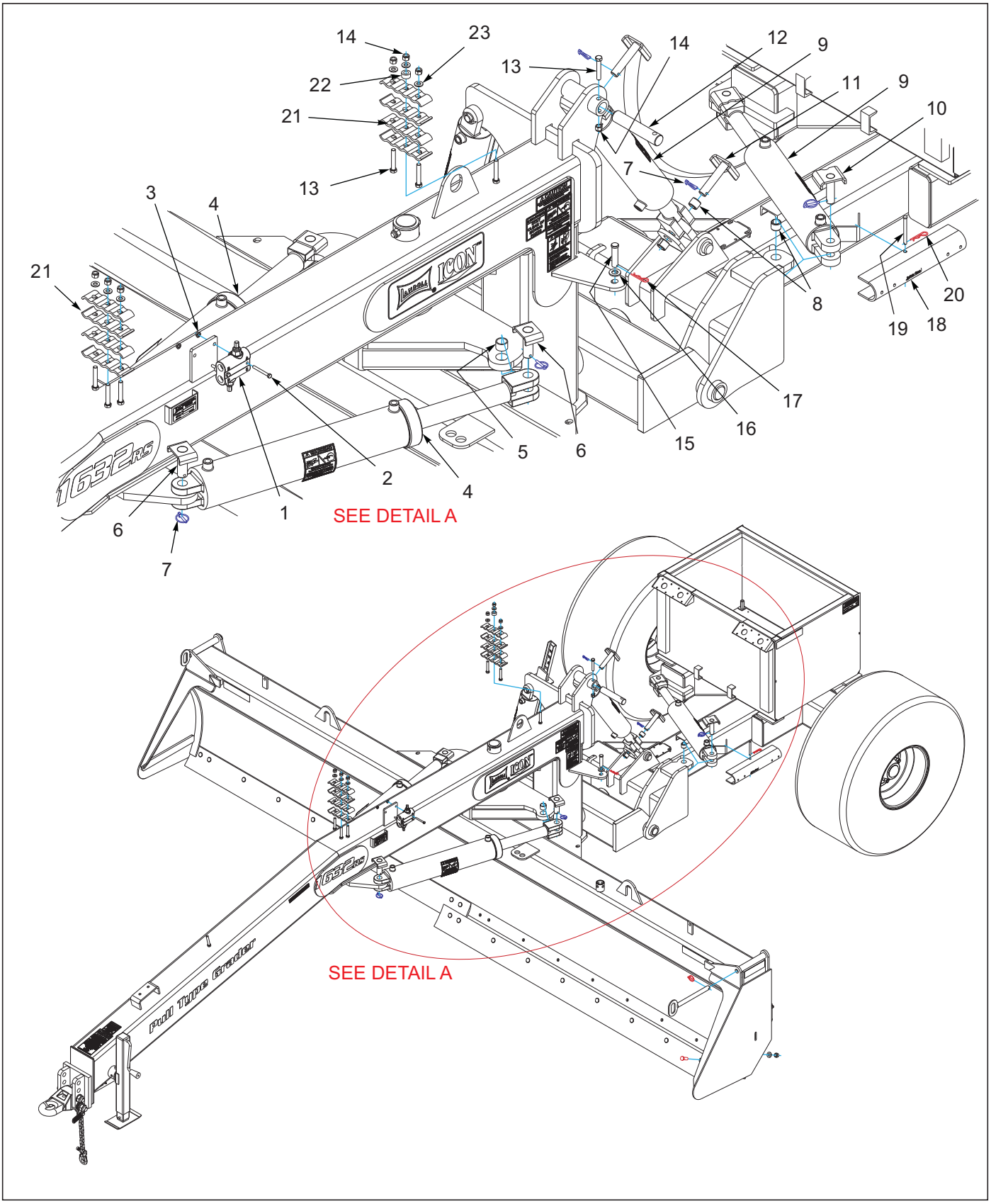

Figure 5-10: Cylinder & Hose Clamp Assembly

Cylinder & Hose Clamp Assembly

ITEM	PART NUMBER	DESCRIPTION	QTY	
--	-----	1432/1632 GRADER STANDARD	*	
--	-----	1432RS/1632RS GRADER REAR STEER		*
1	5000855	HYD VALVE CUSHION DRV1HH-25-25	1	1
2	1-654-010049-12	SCREW,HX CAP,5/16-18UNCX2-3/4	2	2
3	126561	NUT,FLG HD,SERRATED,5/16-18ZP	2	2
4	4000859	HYDCYL - 5X24W CLEVIS 36-1/4"	2	2
5	4000096	BUSHING, 150125100	4	4
6	GRA1599	PIN, CYLINDER - 1-1/4"	4	4
7	134912	PIN, LYNCH 1/4 X 1-1/4	6	8
8	2-150-010008	BUSHING 1-1/4ODX1IDX1 STEEL	4	6
9	4000858	HYDCYL - 4X16W CLEVIS 26-1/4"	--	2
10	GRA1600	PIN,CYLINDER - 1"	--	2
11	ICO0477	PIN,CYLINDER - 1" WLDMT	2	2
12	ICO1078	CYLINDER PIVOT PIN	2	2
13	1-654-010055-09	SCREW,HX CP,1/2-13UNCX3 GR5	2	2
14	W915665-4	NUT, 1/2-13 NYLOCK GR 5 ZP	2	2
15	4001442	PIN, 821 SAFETY 3/4X3 GR8	1	1
16	622-3511-008	WASHER, FLAT 3/4 MIL-CARB SAE	1	1
17	4001443	PIN, BRIDGE 3 X 5/32	1	1
18	ICO1080	STOP, CYLINDER - 16"	1	1
19	1408090	CLEVIS PIN .375X4 ZP	1	1
20	1-557-010403	HAIRPIN 1/8	1	1
21	ICO0223	SIDE PIPE CLAMP	8	8
22	ICO0090	PIN SPACER, ø5/8" X 9/16"	2	2
23	622-3511-005	WASHER, FLAT 1/2 MIL-CARB SAE	6	6

Table provided for general use.

NOTES:

Hydraulic Assembly

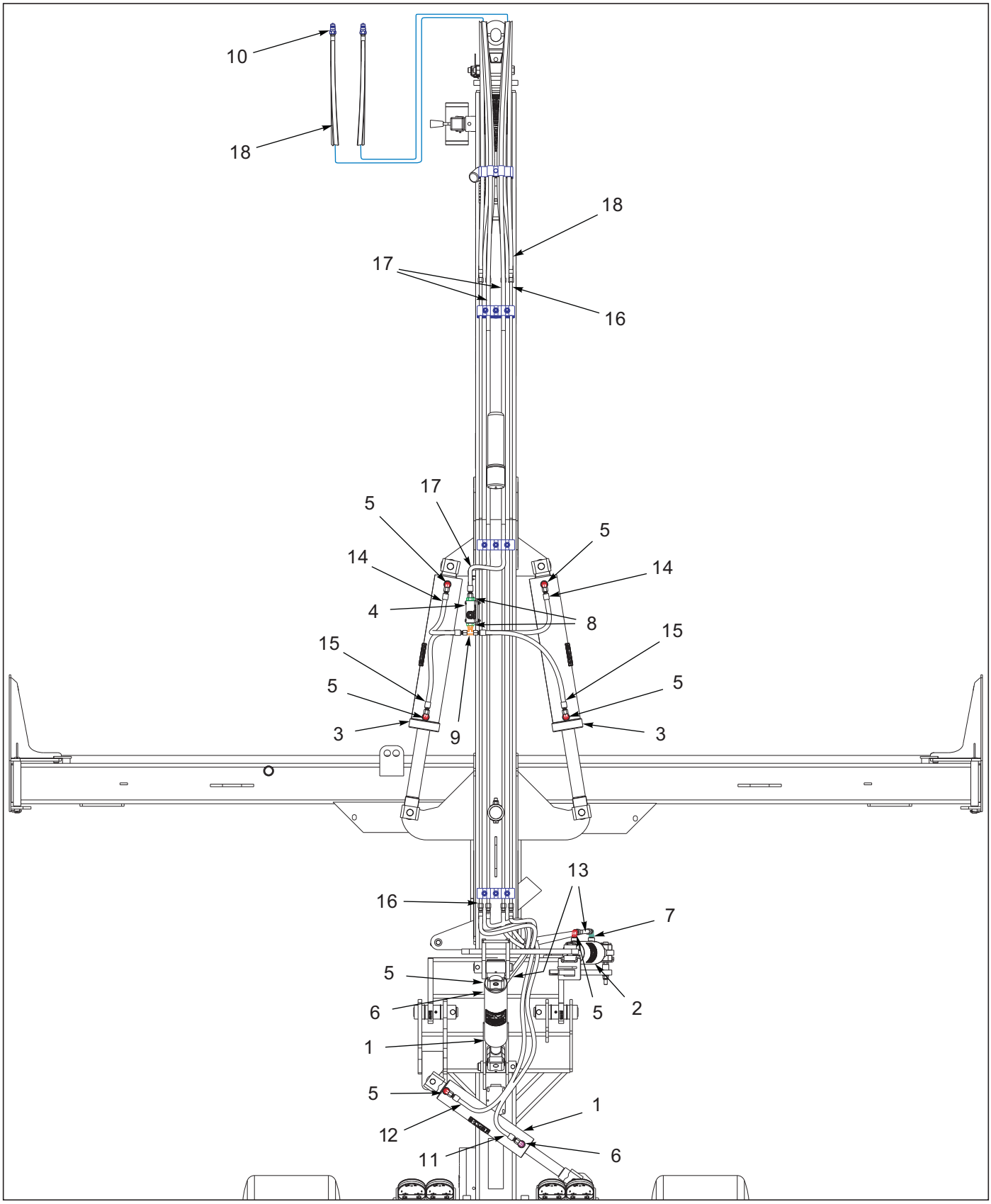

Figure 5-11: Hydraulic Assembly (1 of 2)

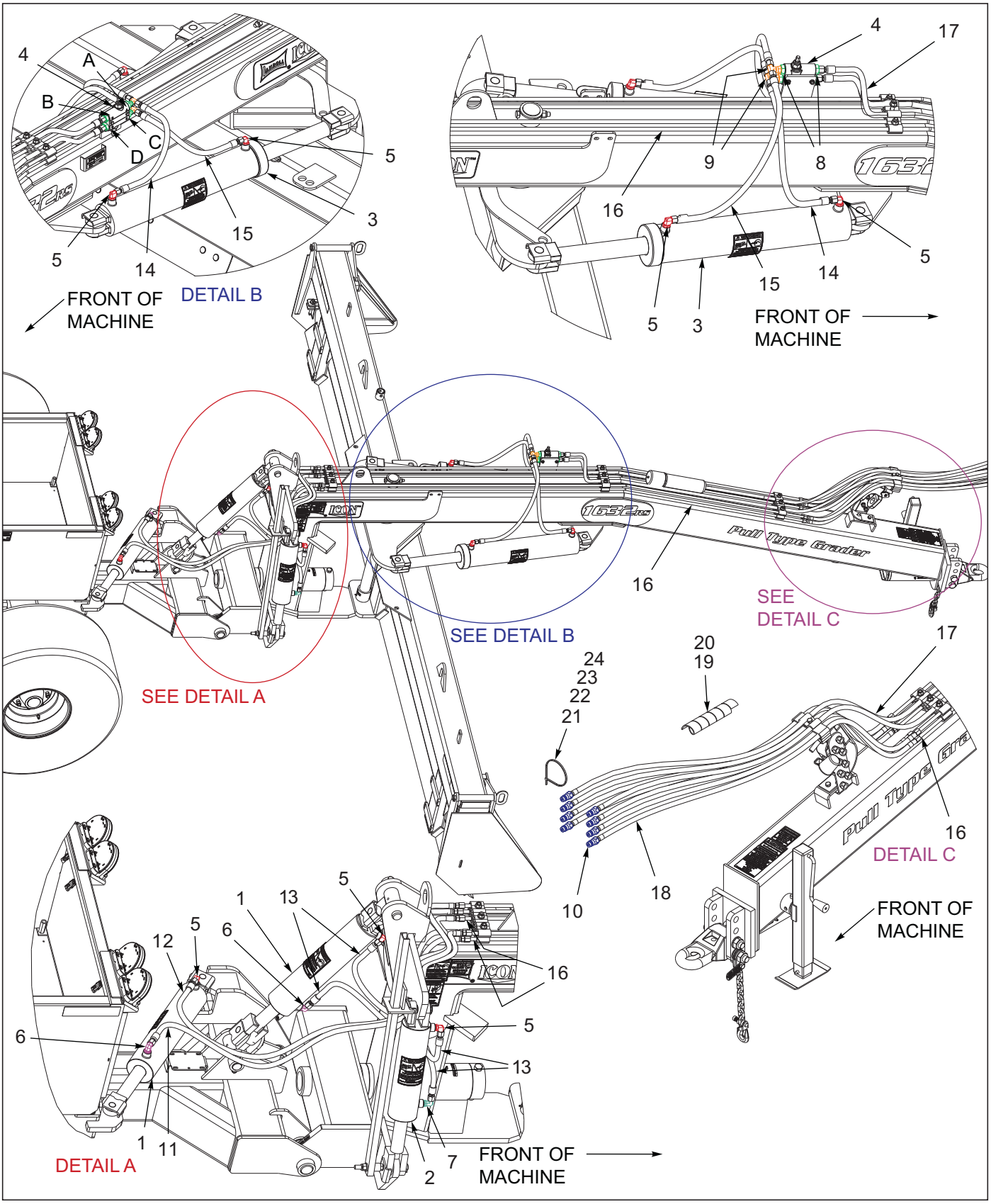

Figure 5-12: Hydraulic Assembly (2 of 2)

Hydraulic Assembly

ITEM	PART NUMBER	DESCRIPTION	QTY	
--	-----	1432/1632 GRADER STANDARD	*	
--	-----	1432RS/1632RS GRADER REAR STEER		*
1	4000858	HYDCYL - 4X16W CLEVIS 26-1/4" **(LIFT & REER STEER) (SEE PAGE 5-26)**	1	2
2	4000857	HYDCYL - 4X12W CLEVIS 22-1/4" **(TILT) (SEE PAGE 5-25)**	1	1
3	4000859	HYDCYL - 5X24W CLEVIS 36-1/4" **(ANGLE) (SEE PAGE 5-27)**	2	2
4	5000855	HYD VALVE CUSHION DRV1HH-25-25	1	1
5	2062-8-8S	ADAPTER, 90, #8 O-RING-TUBE	6	7
6	141826	ELBOW 90 1/16 RES	2	2
7	141827	ELBOW 90 3/4ORB3/4JIC 1/32REST	1	1
8	202702-12-8S	ADAPTER, #12 O-RING #8 TUBE	4	4
9	40-0669-01	TEE,SWIVEL NUT BRANCH,-8	2	2
10	141828	COUPLER,MALE 3/4-16 O-RING	6	8
11	179195	HOSE 3/8X78 #8JIC MALE X #8JIC **(ROD END)**	--	1
12	179196	HOSE 3/8X86 #8JIC MALE X #8JIC **(BASE END)**	--	1
13	5000889	HOSE ASSY 3/8X45 #8JIC X #8JIC	4	4
14	5000858	HOSE ASSY 3/8X22 #8JIC SWIVL	2	2
15	5000859	HOSE ASSY 3/8X30 #8JIC SWIVL	2	2
16	5000893	HYD, TUBE 8FJ-124"-8FJ .049W	4	6
17	5001150	HOSE 3/8X161 #8JIC X #8 ORING	2	2
18	5000979	HOSE ASSY 3/8X93 #8JIC X #8ORB	4	6
19	5000595	HOSE WRAP, 1-1/4" BLACK	--	AR
20	5000934	HOSE WRAP 1/4 HOSE	AR	AR
21	4000722	CABLE TIE 7-1/4 CLEAR 21724	3	3
22	4000723	CABLE TIE, 8" BLACK HD	3	3
23	4000724	CABLE TIE,7 1/2" YELLOW 21524	3	3
24	179208	CABLE TIE, 7-1/2" BLUE, 21526	--	3

Cylinder Assembly 4 x 12

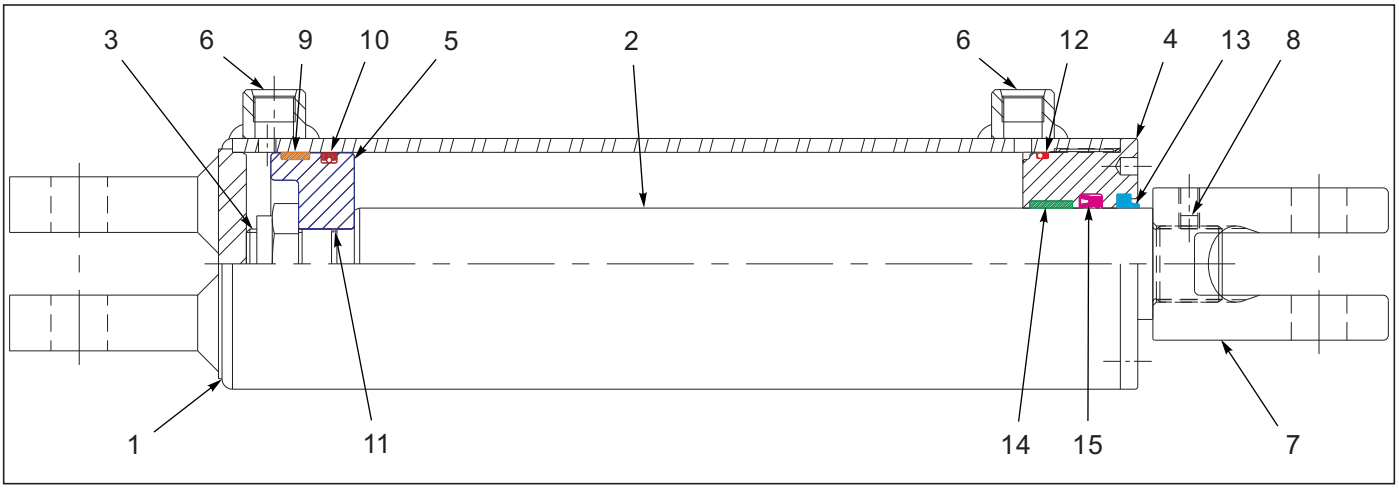

Figure 5-13: Cylinder Assembly 4 x 12

Cylinder Assembly 4 x 12

ITEM	PART NUMBER	DESCRIPTION	QTY
--	4000857	HYDCYL - 4X12W CLEVIS 22-1/4"	
1	-----	CASE WELDMENT	1
2	180906	PISTON ROD	1
3	-----	NUT LOCK THN CLR 1-1/4-12UNF	1
4	180904	HEAD	1
5	-----	PISTON	1
6	-----	PLUG PLASTIC #8 SAE SHIPPING	2
7	-----	CLEVIS CAST Ø1 X 1-3/8 THD	1
8	-----	SCREW SET, 3/8-16UNC X 1/2	1
9	-----	PISTON BUSHING	1
10	-----	O-RING	1
11	-----	O-RING	1
12	-----	O-RING	1
13	-----	WIPER	1
14	-----	DU BUSHING	1
15	-----	U-CUP	1
16	4000642	SEAL KIT **(NOT SHOWN) (INCLUDES ITEMS 9-14)**	

Cylinder Assembly 4 x 16

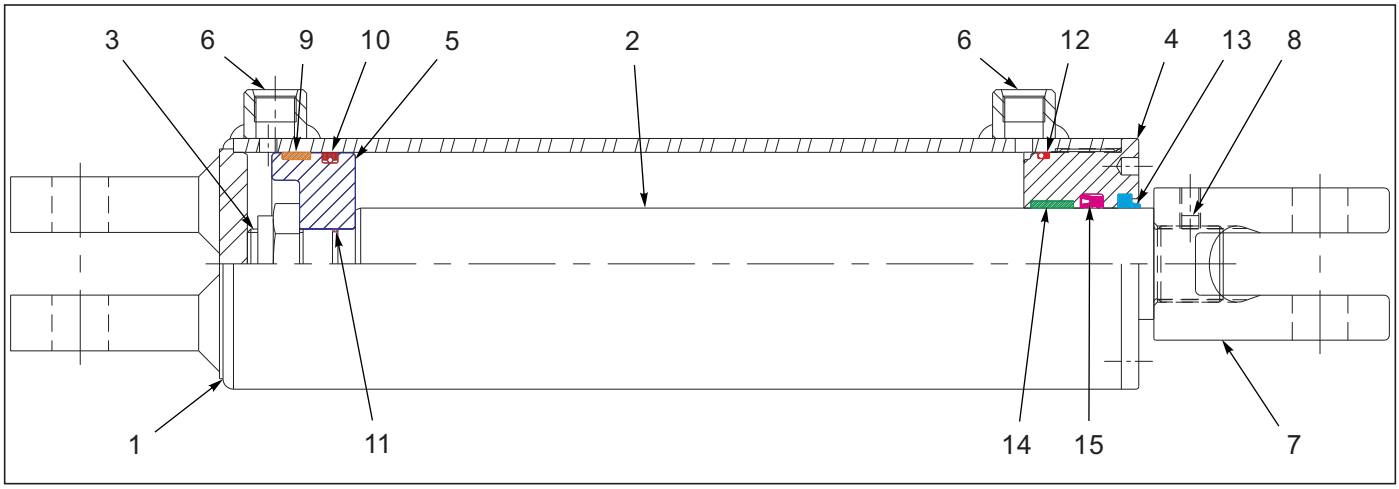

Figure 5-14: Cylinder Assembly 4 x 16

Cylinder Assembly 4 x 16

ITEM	PART NUMBER	DESCRIPTION	QTY
--	4000858	HYDCYL - 4X16W CLEVIS 26-1/4"	
1	-----	CASE WELDMENT	1
2	180903	PISTON ROD	1
3	-----	NUT LOCK THN CLR 1-1/4-12UNF	1
4	180904	HEAD	1
5	-----	PISTON	1
6	-----	PLUG PLASTIC #8 SAE SHIPPING	2
7	-----	CLEVIS CAST Ø1 X 1-3/8 THD	1
8	-----	SCREW SET, 3/8-16UNC X 1/2	1
9	-----	PISTON BUSHING	1
10	-----	O-RING	1
11	-----	O-RING	1
12	-----	O-RING	1
13	-----	WIPER	1
14	-----	DU BUSHING	1
15	-----	U-CUP	1
16	4000642	SEAL KIT **(NOT SHOWN) (INCLUDES ITEMS 9-14)**	

Cylinder Assembly 5 x 24

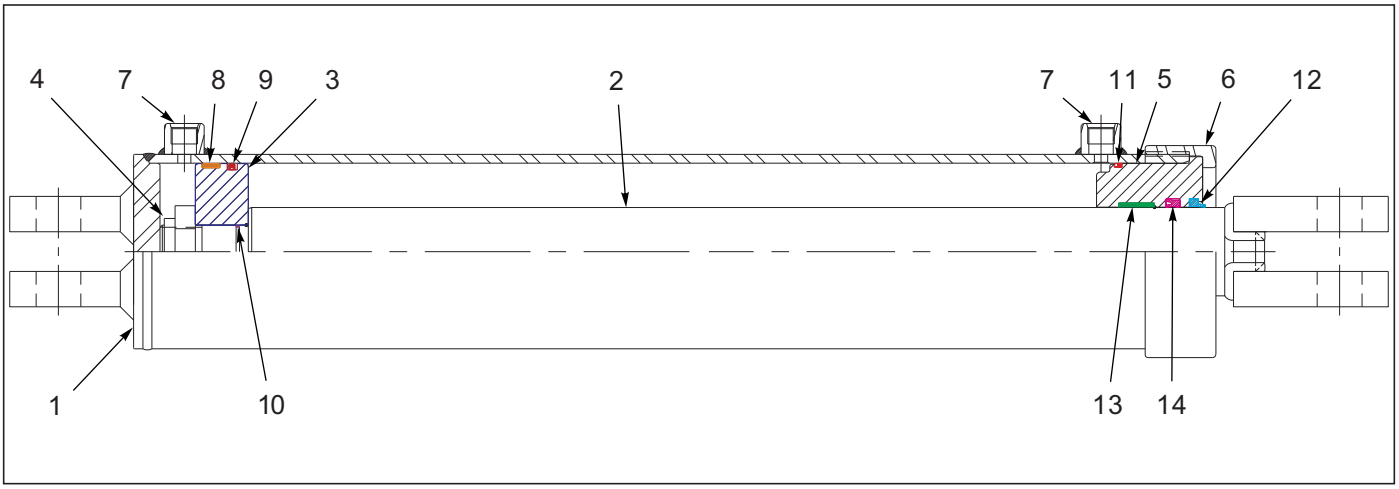

Figure 5-15: Cylinder Assembly 5 x 24

Cylinder Assembly 5 x 24

ITEM	PART NUMBER	DESCRIPTION	QTY
--	4000859	HYDCYL - 5X24W CLEVIS 36-1/4"	
1	-----	CASE WELDMENT	1
2	180901	PISTON ROD	1
3	-----	PISTON	1
4	-----	NUT LOCK THN CLR 1-1/4-12UNF	1
5	180902	HEAD	1
6	216164	RING THREADED	1
7	-----	PLUG PLASTIC #8 SAE SHIPPING	2
8	-----	PISTON BUSHING	1
9	-----	O-RING	1
10	-----	O-RING	1
11	-----	O-RING	1
12	-----	WIPER	1
13	-----	DU BUSHING	1
14	-----	U-CUP	1
15	4000643	SEAL KIT **(NOT SHOWN) (INCLUDES ITEMS 8-14)**	

Electrical Assembly W/LED Lights

7-PIN CONN.	4-PIN TOWER	CIRCUIT	WIRE COLOR
1	D	GROUND	WHITE
2	–	WORK LAMPS	BLACK
3	B	LEFT FLASHING & TURN	YELLOW
4	–	STOP LAMPS	RED
5	A	RIGHT FLASHING & TURN	GREEN
6	C	TAIL LAMPS	BROWN
7	–	SWITCHED POWER (12 V)	BLUE

MAIN WARNING LIGHT HARNESS - WIRING CHART
(NOTE: The Color Of The Wire Jacket Does Not Necessarily Match The Color Of The 7 Pin Connector)

	RIGHT AMBER	RIGHT RED		LEFT RED	LEFT AMBER
	2-PIN TOWER	3-PIN TOWER	6-PIN SHROUD	3-PIN TOWER	2-PIN TOWER
BLACK LEFT TURN			A	C	
WHITE GROUND	A	A	B	A	A
BROWN TAIL LIGHT		B	C	B	
YELLOW LEFT TURN			D		B
GREEN RIGHT TURN	B		E		
RED RIGHT TURN		C	F		

REAR WARNING LIGHT HARNESS - WIRING CHART

Figure 5-16: Electrical Assembly W/LED Lights (1 of 2)

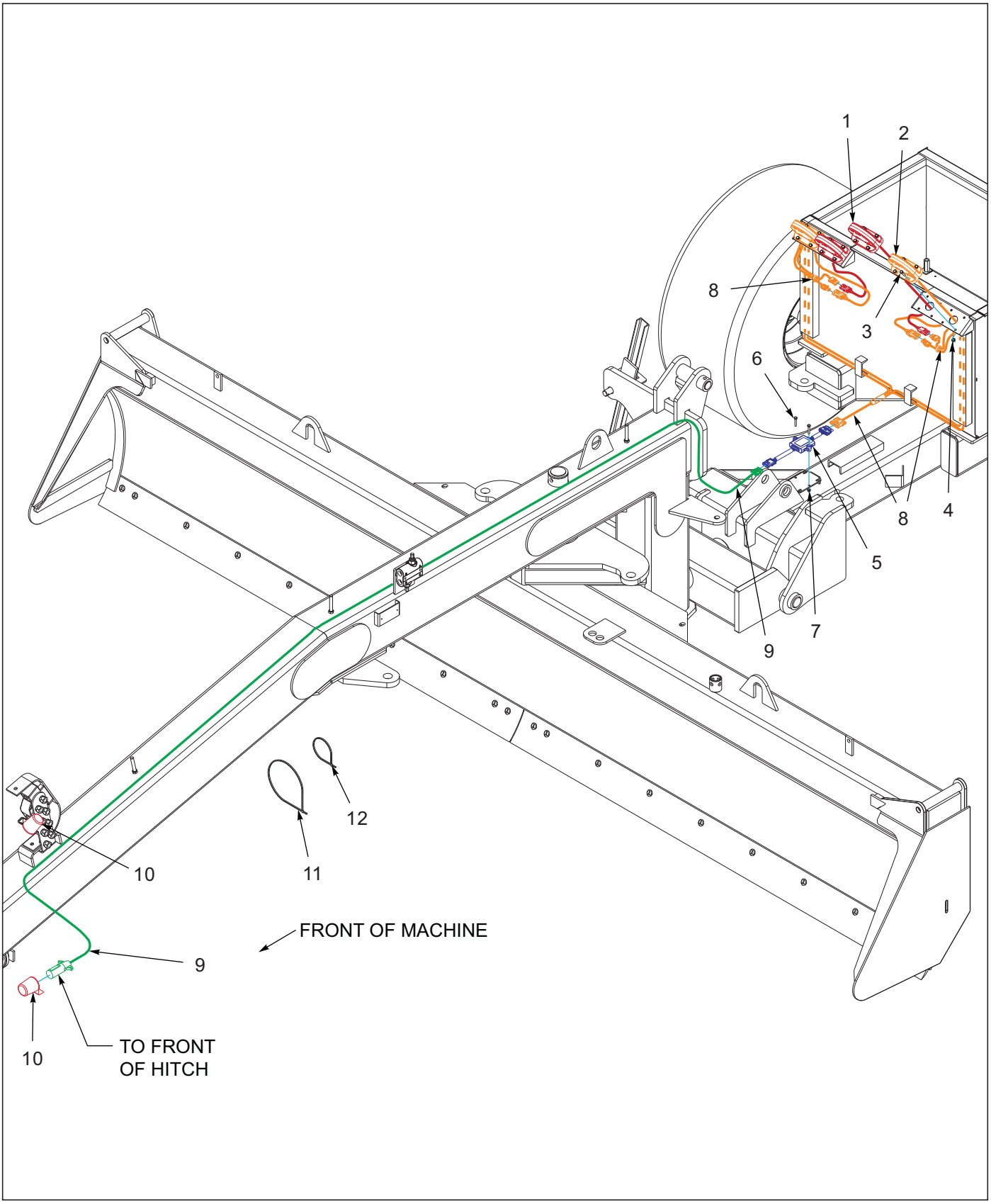

Figure 5-17: Electrical Assembly W/LED Lights (2 of 2)

Electrical Assembly W/LED Lights

ITEM	PART NUMBER	DESCRIPTION	QTY
--	200339	KIT 25' X 6' LED LIGHTS	
1	174435	LAMP, AG RED SINGLE LED	2
2	174436	LAMP, AG AMBER SINGLE LED	2
3	1-654-010047-07	SCREW,HX CP 1/4-20UNCX1-1/4G5	8
4	142779	NUT,FLANG SERRATED 1/4-20	8
5	174437	MODULE, AG FLASHER CONTROL	1
6	1-654-010047-08	SCREW HX CP,1/4-20UNCX1-1/2G5	2
7	1-512-010005-01	NUT,HEX,SLFLKG GRB 1/4-20	2
8	200347	REAR HARNESS, WARN LIGHT, 6'	1
9	200344	FRONT HARNESS,WRN LIGHTS, 25'	1
10	2-368-010287	HARNESS, STOR-A-WAY	1
11	105874	TIE,STRAP PLSTC 21.5-24X.301	1
12	4000723	CABLE TIE, 8" BLACK HD	4

Light Kit Before 6-1-2016

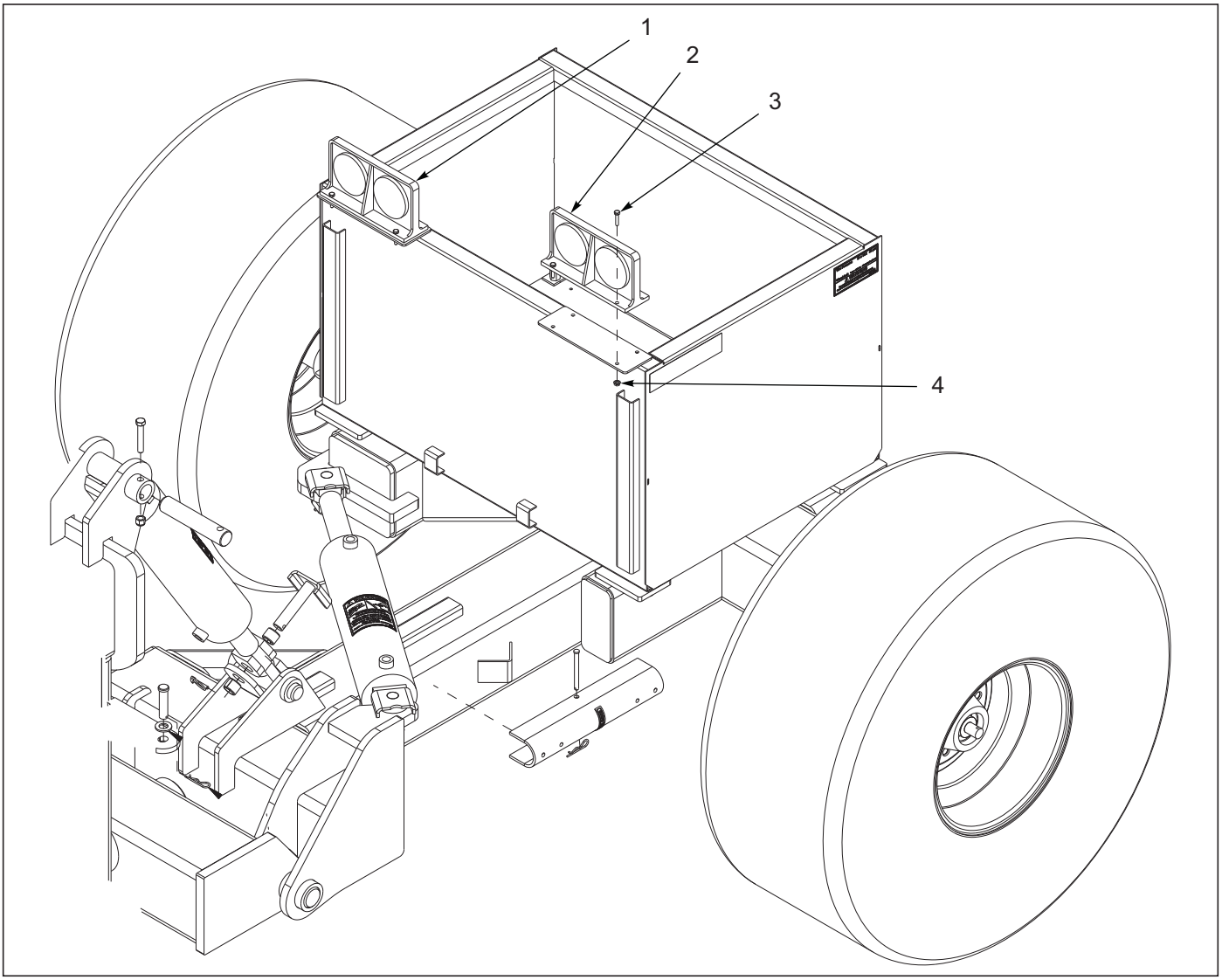

Figure 5-18: Light Kit Before 6-1-2016

Light Kit Before 6-1-2016

ITEM	PART NUMBER	DESCRIPTION	QTY
--	2000620	OPTION, 1632 LIGHT KIT	
1	4001301	LIGHTS, MODULAR RIGHT-W/BRAKE	1
2	4001300	LIGHTS, MODULAR LEFT-W/BRAKE 0	1
3	1-654-010047-07	SCREW,HX CP 1/4-20UNCX1-1/4G5	8
4	142779	NUT,FLANG SERRATED 1/4-20	8
5	LT0001	LIGHTS,FRONT LIGHT HARNESS 29 (**NOT SHOWN)**	1
6	LT0056	LIGHTS, REAR HARNESS5'X5'(**NOT SHOWN)**	1

Table provided for general use.

NOTES:

Decals

Hydraulic Line Color Code:
Black: Raise / Lower
Yellow: Tilt
White: Blade Angle
1 Tie: Hydraulics Out / 2 Ties: Hydraulics In
4000625

Hydraulic Line Color Code:
Black: Raise / Lower
Yellow: Tilt
White: Blade Angle
Blue: Rear Steer
1 Tie: Hydraulics Out / 2 Ties: Hydraulics In
197567

1

DANGER

Do not allow anyone to ride on or to be near this machine while it is in motion or being cycled.
Do not service or adjust this machine while the tractor is running. Lower all hydraulic elevated components to the down position before service or adjustment, or if necessary, safely block those components in position.
4001550

2

Always contact utilities before digging. Striking objects above or below ground will abuse the blade and may cause considerable damage to the Grader.
4001484

3

CAUTION

This machine is designed for off road use only.
4001516

4

WARNING

Be certain to remove the cylinder safety stops before cycling the machine, or damage to the cylinders or machine, may occur.
4001446

5

Pull Type Grader
Rear Steer Grader

6

Safety/Operations/Parts/Manual
4000635

7

1432
1432RS
1632
1632RS

8

LANDOLL
Landoll Company, LLC
Marysville, Kansas
www.landoll.com
MODEL #
SERIAL #
MADE IN USA
1-573-010006

9

10

WARNING

High pressure fluid hazard !
To prevent serious injury or death:
- Carefully relieve pressure on system before adjusting, repair, or disconnect
- Wear proper hand and eye protection when servicing.
- Repair or replace all bad components.

4000931

11

LANDOLL ICON™

12

WARNING

STAY CLEAR OF MOVING PARTS
4000372

13

DANGER

To prevent serious injury or death from pinching and crushing:
- Keep all persons and objects clear of this machine while any part is in motion
- Do not crawl in or under this machine while the tractor is running. Place the safety stops on the hydraulic cylinders before servicing.

4000940

14

CAUTION

Unpin mowboard transport pin, swing mowboard away from tires, before using hydraulics to lower machine. Failure to do so, could result in tire or mowboard damage.
4001827

15

Safety Stop
4001445

16

WARNING

Tire repair should be done by qualified personnel.
Mount or dismount of heavy ply tires can be dangerous!
Tire Pressure: 19 x 16.1 35 psi
Wheel Bolt Torque-150 ft. Lbs. (Check after first 30 hrs.)
4001558

17

Grease Daily
4000938

18

Figure 5-19: Decals (1 of 3)

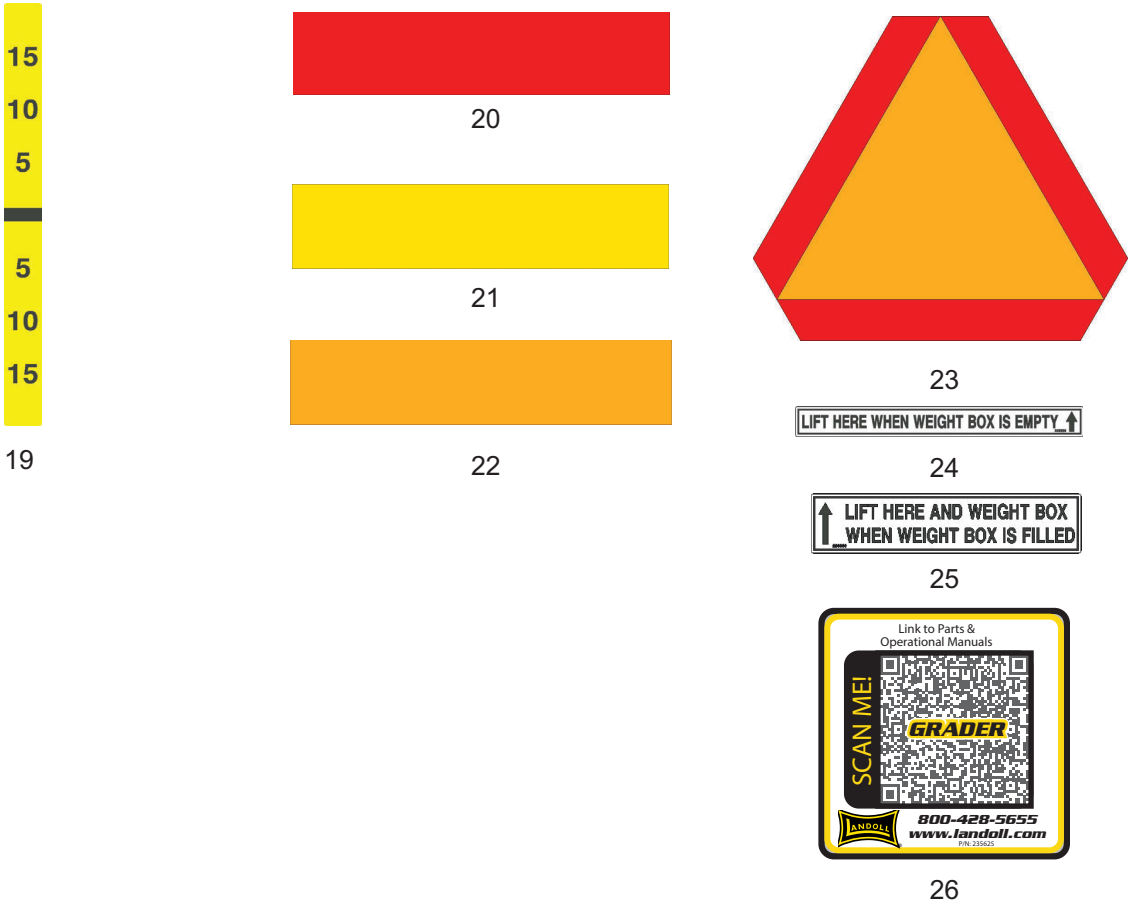

Figure 5-20: Decals (2 of 3)

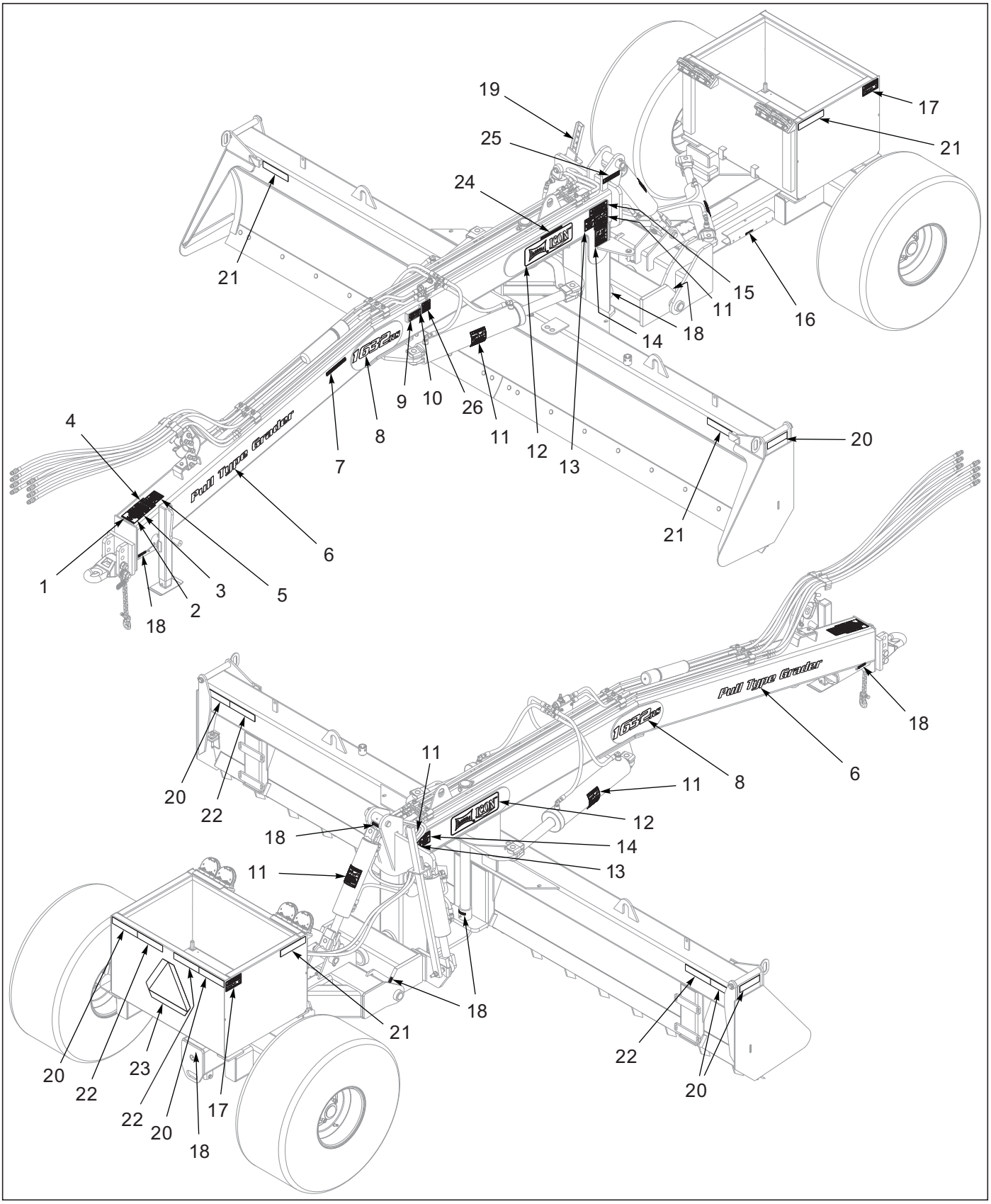

Figure 5-21: Decals (3 of 3)

Decals

ITEM	PART NUMBER	DESCRIPTION	QTY			
--	187372	KIT, 1432 DECAL	*			
--	200353	KIT, 1432RS DECAL		*		
--	2000602	KIT, 1632 DECAL			*	
--	197568	KIT, 1632RS DECAL				*
1	4000625	DECAL, HYD LINE COLOR CODE	1	--	1	--
1	197567	DECAL, HYD COLOR CODE, RS	--	1	--	1
2	4001550	DECAL, DANGER NO RIDING	1	1	1	1
3	4001484	DECAL "ALWAYS CONTACT UTILITIE	1	1	1	1
4	4001516	DECAL-OFF ROAD ONLY	1	1	1	1
5	4001446	DECAL "WARNING-REMOVE CYL.STOP	1	1	1	1
6	4001246	DECAL, PULL TYPE GRADER	2	--	2	--
6	197563	DECAL, REAR STEER GRADER	--	2	--	2
7	4000935	DECAL "SAFETY/OPERATIONS/PARTS	1	1	1	1
8	4001526	DECAL #1432 4" TALL	1	--	--	--
8	200354	DECAL, 1432RS MODEL	--	1	--	--
8	4001502	DECAL, 1632 MODEL	--	--	1	--
8	197566	DECAL, 1632RS MODEL	--	--	--	1
9	1-573-010006	PLACARD, NAME	1	1	1	1
10	156010	RIVET, BLIND .156X1/2 GRIP	2	2	2	2
11	4000931	DECAL "WARNING" HIGH PRESSURE	5	5	5	5
12	4001522	DECAL, LANDOLL/ICON, 5-1/2X17	2	2	2	2
13	4000372	DECAL WARN MOVING PARTS 3-1/2	2	2	2	2
14	4000940	DECAL "DANGER" PINCHING/CRUSHI	2	2	2	2
15	4001527	DECAL "CAUTION- UNPIN MOWBOARD	1	1	1	1
16	4001445	DECAL "SAFETY STOP" 3/4X2 3/4	1	1	1	1
17	4001558	DECAL 19X16.1 35PSI TIRE PRES	2	2	2	2
18	4000938	DECAL "GREASE DAILY"	9	10	9	10
19	4001426	DECAL 16C GRADER DEPTH GAUGE	1	1	1	1
20	528933	REFLECTOR - RED	6	6	6	6
21	528934	REFLECTOR - YELLOW	4	4	4	4
22	528938	STRIPE, ORANGE	4	4	4	4
23	4000335	DECAL SLOW MOVING 1FP-C	1	1	1	1
24	225558	DECAL, EMPTY LIFTING POINT	1	1	1	1
25	225559	DECAL, FILLED LIFTING POINT	1	1	1	1
26	235625	DECAL, QR CODE GRADER	1	1	1	1

Gauge Wheel Assembly

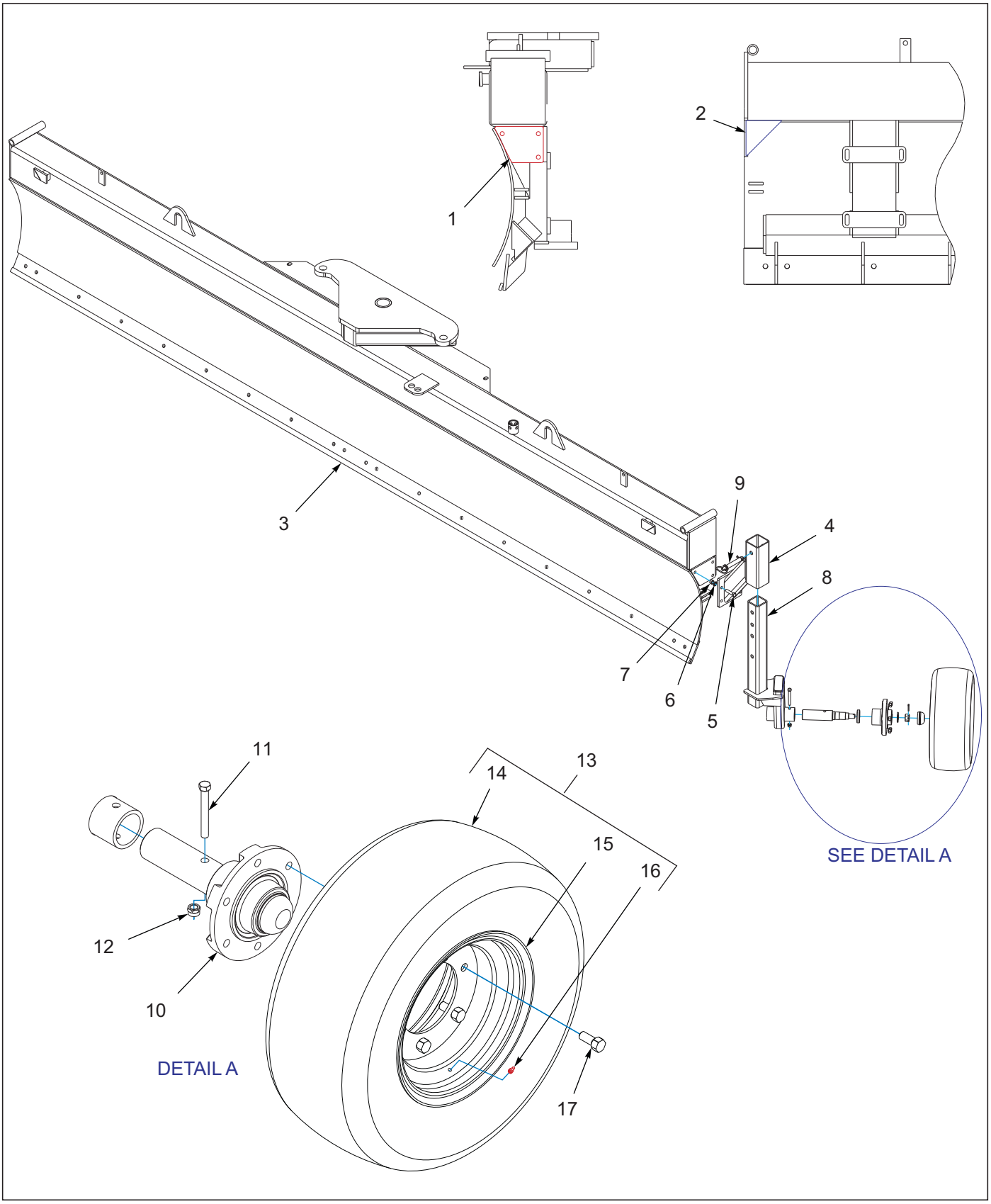

Figure 5-22: Gauge Wheel Assembly

Gauge Wheel Assembly

ITEM	PART NUMBER	DESCRIPTION	QTY	
--	2000631	KIT GAUGE WHL OPT LH W/WELD ON **(SHOWN)**	*	
--	2000636	KIT GAUGE WHL OPT RH W/WELD ON		*
1	9303018	2000631 PLATE 1/2"	1	1
2	9303022	2000631 PLATE 1/2"	1	1
3	ICO2182	1632 MOWBOARD WLDMT	REF	REF
4	ICO2225	GAUGE WHEEL SUPPORT	1	1
5	1-654-010055-05	SCREW,HEX CAP,1/2-13UNCX2 GR5	3	3
6	1-861-010034-13	WASHER, LKG HLCL SPR, 1/2	3	3
7	61D8ER	NUT, HEX 1/2-13UNC GR5 ZP	3	3
8	ICO2234	GAUGE WHEEL STAND LH SIDE	1	--
8	ICO2226	GAUGE WHEEL STAND RH SIDE	--	1
9	4001311	3/4 x 4 HITCH PIN	1	1
10	224600	HUB & SPINDLE ASSY, 6 BOLT **(SEE PAGE 5-39)**	1	1
11	141808	SCREW HX CP7/16-14UNCX3-1/2G5	1	1
12	101988	NUT,HEXSLF-LKG 7/16-14 GRB	1	1
13	141271	TIRE AND WHEEL ASSY,FRT YELLOW **(INCLUDES ITEMS 14-16)**	1	1
14	160151	TIRE 20.5X8 10/8 PLY	1	1
15	160155	WHEEL 10X6 6 BOLT	1	1
16	TR416	VALVE STEM TUBELESS TIRE	1	1
17	1-104-010002	WHEEL BOLT1/2X1-3/8 S	6	6

Hub/Spindle Assembly (Gauge Wheel)

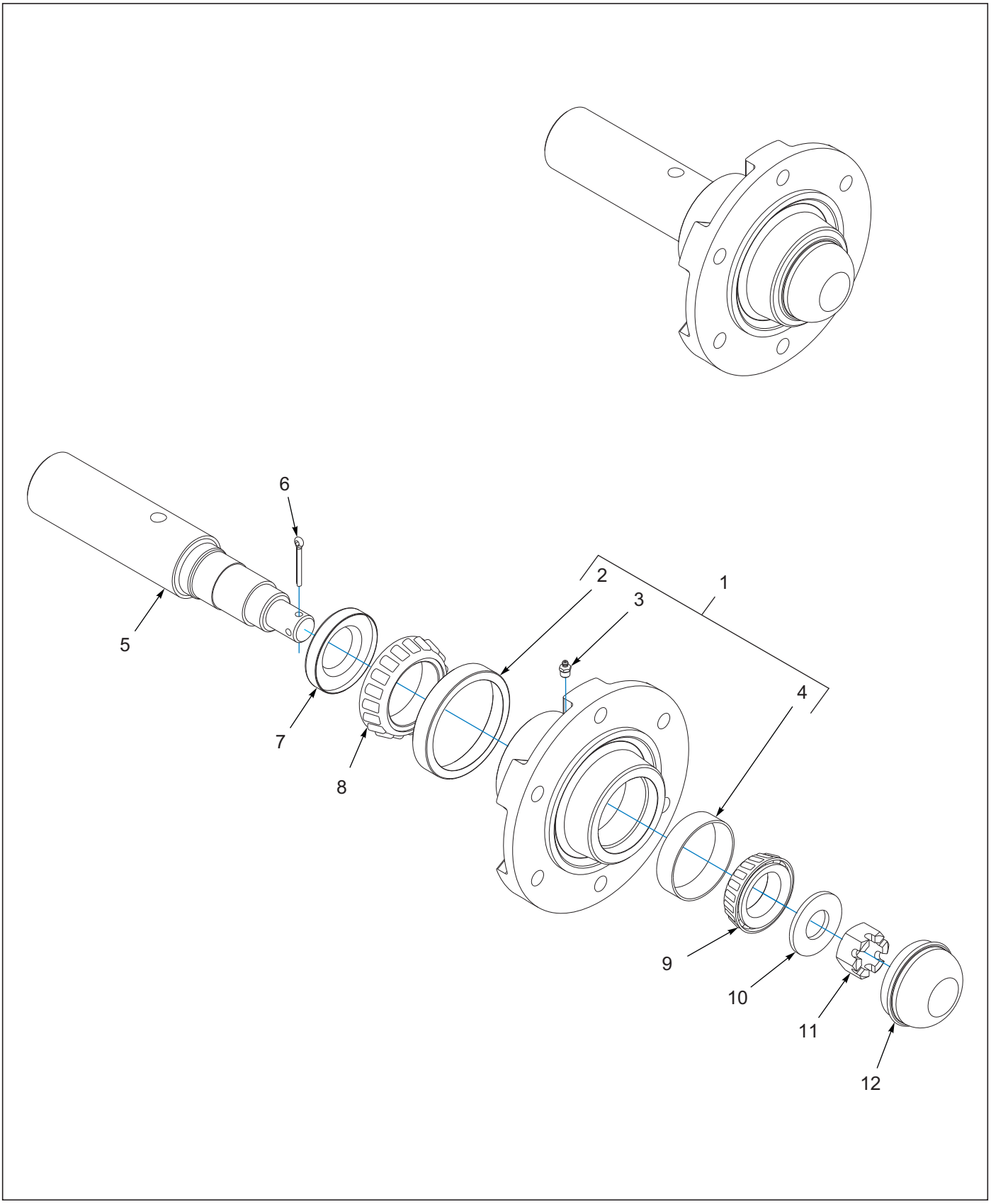

Figure 5-23: Hub/Spindle Assembly (Gauge Wheel)

Hub/Spindle Assembly (Gauge Wheel)

ITEM	PART NUMBER	DESCRIPTION	QTY
--	224600	HUB & SPINDLE ASSY, 6 BOLT	
1	1-406-010012	HUB 6 BOLT W/CUPS **(INCLUDES ITEMS 2-4)**	1
2	1-076-010012	CUP OUTER **(INNER SIDE OF HUB)**	1
3	1-298-010001-1	ZERK FITTING 1/4 SAE	1
4	1-076-010010	CUP INNER **(OUTER SIDE OF HUB)**	1
5	141245	SPINDLE, GAUGE WHEEL	1
6	1-557-010362-40	PIN, COTTER 5/32X1-1/4	1
7	1-659-010004	1-5/8 ID GREASE SEAL	1
8	1-076-010009	CONE INNER **(INNER SIDE OF HUB)**	1
9	1-076-010007	CONE INNER **(OUTER SIDE OF HUB)**	1
10	1-861-010004	WASHER SPINDLE 7/8	1
11	100966	NUT, HEX SLOTTED 7/8-14	1
12	1-861-010003	WASHER SPINDLE 3/4	1

GPS Mount Assembly (Optional)

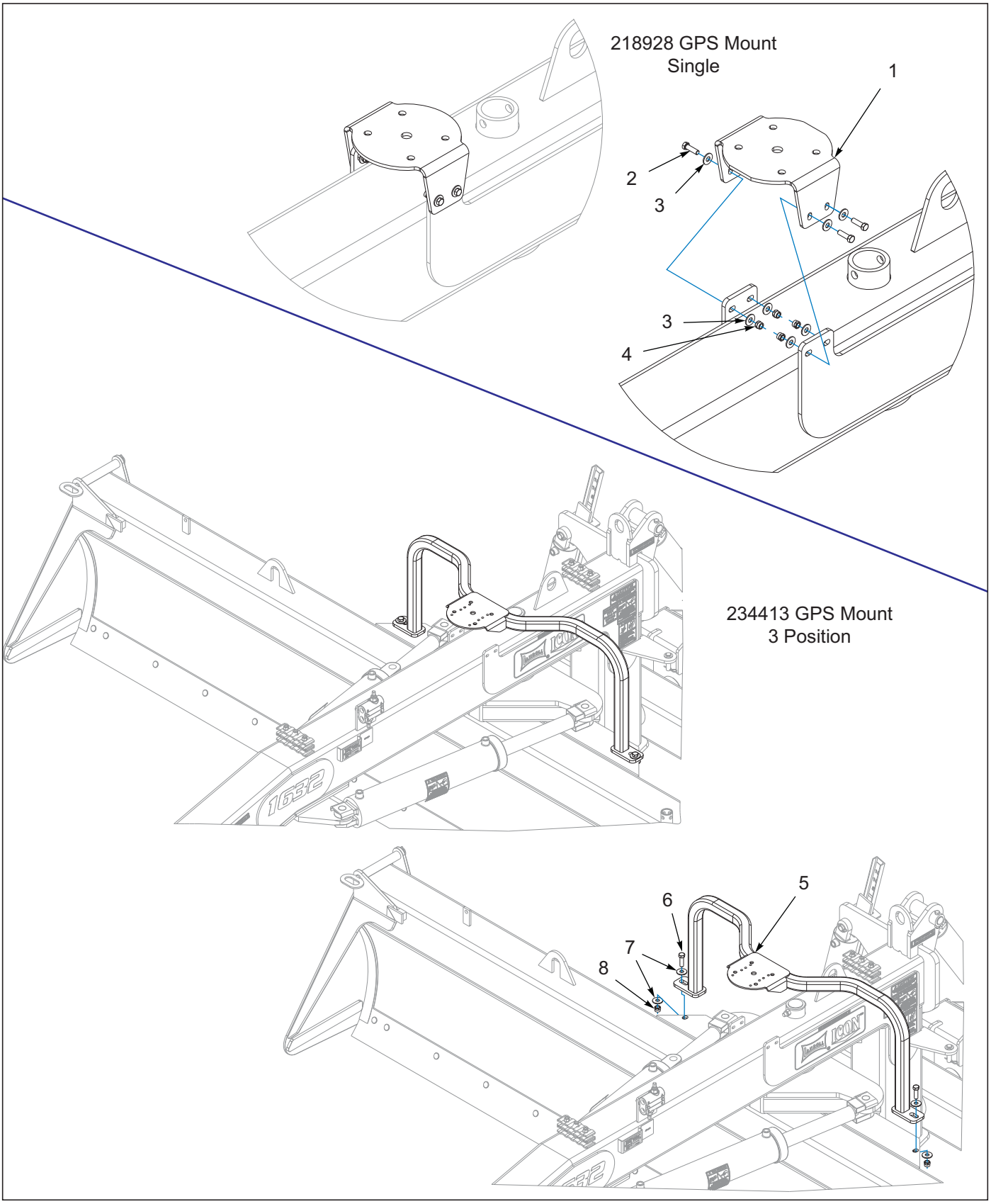

Figure 5-24: GPS Mount Assembly (Optional)

GPS Mount Assembly (Optional)

ITEM	PART NUMBER	DESCRIPTION	QTY	QTY
--	218928	KIT, SINGLE GPS MOUNT, 1632	*	
--	234413	KIT, GRADER GPS MNT,3 POSITION		*
1	218915	BRACKET, GPS MOUNT	1	--
2	1-654-010051-06	SCREW,HEX CAP 3/8-16UNCX1-1/4	4	--
3	1-861-010032-11	WASHER, FLAT 3/8 W ZP/CD	8	--
4	1-512-010005-05	NUT, HEX, SLFLKG GRB 3/8-16	4	--
5	234327	WLDMT, GRADER GUIDANCE MNT	--	1
6	1-654-010059-05	SCREW,HEX CAP,5/8-11UNCX2 GR5	--	2
7	1-861-010032-19	WASHER, FLAT 5/8 W ZP/CD	--	4
8	1-512-010005-13	NUT,HEX SLFLKG GRB 5/8-11	--	2

Table provided for general use.

NOTES:

Chapter 12

Glossary

For clarity this glossary of industry standard abbreviations and their definitions are provided.

A

ASM . . . . . Assembly

B

BATT . . . . . .Battery
BHSC . . . . . Button Head Socket Cap
BLK . . . . . Black

C

CB . . . . . .Carriage Bolt
CONN . . . . . Connector
CRG . . . . . Carriage
CTSK . . . . . Countersunk
CTWT . . . . . .Counterweight
CVR . . . . . Cover
CYD . . . . . .Cylinder

D

DBL . . . . . .Double
DIA . . . . . Diameter

E

ENCLSD . . . . . Enclosed

F

FHCS . . . . . .Flanged Head Cap Screw
FHHCS . . . . . Flanged Hex Head Cap Screw
FL OR **FLG** . . . . . .Flange
FLT . . . . . Flat

G

GA . . . . . Gauge

H

HHCS . . . . . .Hex Head Cap Screw
HCS . . . . . High Carbon Steel
HD . . . . . .Head
HLCL . . . . . Helical
HCSKT . . . . . .Hex Socket
HSFC . . . . . Hex Socket Flat Countersunk
HYD . . . . . Hydraulic

I

ID . . . . . Inside Diameter

L

LH . . . . . .Lefthand
LKG OR **LOCK** . . . . . .Locking
LWR . . . . . Lower

M

MANF . . . . . Manifold
MNT . . . . . .Mount

N

NRW . . . . . Narrow
- - - - - . . . . . Not Serviced Separately

O

OD . . . . . .Outside Diameter
OHG . . . . . Overhead Guard
ORFS OR **ORS** . . . . . O-Ring Seal
ORP OR **ORB** . . . . . .O-Ring Boss

P

P-STEER . . . . . .Power Steering
PTFE . . . . . .Polytetrafluoroethylene (Teflon)

R

RH . . . . . Righthand
RND . . . . . Round

S

SER . . . . . Series
SHCS . . . . . Socket Head Cap Screw
SHLD . . . . . Shield
SKT . . . . . Socket
SLFLKG . . . . . Selflocking
SOC . . . . . Socket
SPDT . . . . . Single Pole Double Throw
SPR . . . . . Spring
SQ . . . . . Square
SRTD . . . . . Serrated
SSCR . . . . . Setscrew
SST . . . . . Stainless Steel
STD . . . . . Standard

U

UPR . . . . . Upper

W

WHL . . . . . Wheel
WLD OR **WLDMT** . . . . . Weldment

Chapter 7

Index

Numerics

100966 5-40
101988 5-38
102498 . . . . . 5-14, 5-16
102600 . . . . . 5-14, 5-16
102604 . . . . . 5-14, 5-16
103-0625 5-8
105874 5-30
1-076-010007 5-40
1-076-010009 5-40
1-076-010010 5-40
1-076-010012 5-40
110-0238 5-6
1-104-010002 5-38
110-4224 . . . . . 5-12, 5-14
1-116-010019 5-6
111962 . . . . . 5-14, 5-16
118652 5-6
120876 5-6
126561 5-20
1-298-010001-1 5-40
134912 . . . . . 5-6, 5-8, 5-20
1-406-010012 5-40
140647 . . . . . 5-6, 5-17
1408090 5-20
141245 5-40
141250 5-17
141271 5-38
141434 5-6
141808 5-38
141826 5-24
141827 5-24
141828 5-24
142194 5-17
142779 . . . . . 5-30, 5-31
144264 5-9
1-510-010003-09 . . . . . 5-6, 5-8
1-512-010005-01 . . . . . 5-6, 5-30
1-512-010005-05 5-42
1-512-010005-09 . . . . . 5-8, 5-9
1-512-010005-13 5-42
1-512-010005-19 5-9
1-516-010001-20 . . . . . 5-12, 5-14, 5-16
1-557-010362-40 5-40
1-557-010362-51 5-16
1-557-010403 5-20
155971 5-9
156010 5-36
156973 5-16
156979 5-16
1-573-010006 5-36
160151 5-38
160155 5-38
1-654-010047-06 5-6
1-654-010047-07 . . . . . 5-30, 5-31
1-654-010047-08 5-30
1-654-010049-12 5-20
1-654-010051-06 5-42
1-654-010055-03 5-6
1-654-010055-05 . . . . . 5-8, 5-9, 5-38
1-654-010055-09 . . . . . 5-6, 5-20
1-654-010059-05 5-42
1-654-010125-20 5-6
1-654-010125-22 5-6
1-659-010004 5-40
168859 5-16
172580 5-9
172791 5-6
172827 5-8

172829 5-8
172830 5-8
172839 5-8
172892 5-8
172926 5-8
173240 . . . . . 5-4, 5-8
174435 5-30
174436 5-30
174437 5-30
179183 . . . . . 5-8, 5-9
179184 5-9
179187 5-9
179190 5-9
179195 5-24
179196 5-24
179208 5-24
179259 5-8
180901 5-27
180902 5-27
180903 5-26
180904 . . . . . 5-25, 5-26
180906 5-25
184125 5-8
1-861-010003 5-40
1-861-010004 5-40
1-861-010005 . . . . . 5-14, 5-16
1-861-010032-11 5-42
1-861-010032-14 . . . . . 5-8, 5-9
1-861-010032-19 5-42
1-861-010032-24 5-6
1-861-010032-25 . . . . . 5-8, 5-12
1-861-010034-13 5-38
187372 5-36
193089 5-16
197563 5-36
197566 5-36
197567 5-36
197568 5-36
2000602 5-36
2000620 5-31
2000631 5-38
2000636 5-38
200339 5-30
200344 5-30
200347 5-30
200353 5-36
200354 5-36
202230 5-6
202702-12-8S 5-24
2062-8-8S 5-24
2-150-010008 . . . . . 5-8, 5-20
216164 5-27
218915 5-42
218928 . . . . . 5-4, 5-42
223435 . . . . . 5-14, 5-16
223437 . . . . . 5-14, 5-16
223438 . . . . . 5-14, 5-16
223439 . . . . . 5-14, 5-16
223440 5-16
224600 . . . . . 5-38, 5-40
225503 5-14
225558 5-36
225559 5-36
234327 5-42
234413 . . . . . 5-4, 5-42
235625 5-36
2-368-010287 . . . . . 5-6, 5-30
4000096 5-20
4000126 5-6
4000127 5-6
4000335 5-36
4000372 5-36
4000580 5-12
4000582 5-12
4000585 5-12
4000625 5-36

4000642 . . . . . 5-25, 5-26
4000643 5-27
4000722 5-24
4000723 . . . . . 5-24, 5-30
4000724 5-24
4000750 5-6
4000857 . . . . . 5-8, 5-24, 5-25
4000858 . . . . . 5-20, 5-24, 5-26
4000859 . . . . . 5-20, 5-24, 5-27
4000931 5-36
4000935 5-36
4000938 5-36
4000940 5-36
4001057 5-12
4001058 5-12
4001059 5-12
4001060 . . . . . 5-12, 5-14, 5-16
4001061 . . . . . 5-12, 5-14
4001062 . . . . . 5-12, 5-14
4001244 5-4
4001245 5-4
4001246 5-36
4001271 5-4
4001300 5-31
4001301 5-31
4001311 5-38
4001426 5-36
4001442 5-20
4001443 5-20
4001445 5-36
4001446 5-36
4001484 5-36
4001501 5-6
4001502 5-36
4001503 5-6
4001516 5-36
4001517 5-12
4001522 5-36
4001526 5-36
4001527 5-36
4001550 5-36
4001558 5-36
40-0669-01 5-24
5000 . . . . . 5-8, 5-12, 5-14, 5-16
5000595 5-24
5000855 . . . . . 5-20, 5-24
5000858 5-24
5000859 5-24
5000889 5-24
5000893 5-24
5000934 5-24
5000979 5-24
5001150 5-24
500171 5-17
5-14 5-2
5-23 5-2
5-28 5-2
528933 5-36
528934 5-36
528938 5-36
5-3 5-2
5-32 5-2
61D8ER 5-38
622-3511-005 . . . . . 5-6, 5-8, 5-20
622-3511-007 . . . . . 5-6, 5-8
622-3511-008 5-20
622-3511-010 . . . . . 5-6, 5-8
622-3511-018 5-8
63D10ER 5-6
9303018 5-38
9303022 5-38
9602016 5-6

F

F-740-2511 1-1

G

GRA1599 5-20
GRA1600 5-20
GRA2044 5-4

I

ICO0004 5-6
ICO0090 5-20
ICO0223 . . . . . 5-6, 5-20
ICO0226 5-6
ICO0360 . . . . . 5-12, 5-14
ICO0361 5-12
ICO0372 5-8
ICO0477 5-20
ICO0544 5-6
ICO1051 5-4
ICO1069 5-4
ICO1075 5-4
ICO1076 5-8
ICO1077 5-8
ICO1078 5-20
ICO1079 5-8
ICO1080 5-20
ICO1082 5-8
ICO1096 5-6
ICO2153 5-4
ICO2154 5-4
ICO2182 . . . . . 5-4, 5-38
ICO2183 5-4
ICO2186 5-4
ICO2187 5-4
ICO2205 5-4
ICO2225 5-38
ICO2226 5-38
ICO2234 5-38
ICO2254 5-8
ICO2255 5-8
ICO2324 5-4
ICO2325 5-4

L

LT0001 5-31
LT0056 5-31

S

SCR2160 5-8

T

TR416 5-38
TR571 5-4

W

W915665-4 . . . . . 5-6, 5-20

Instructions for Ordering Parts

**** Repair parts must be ordered through an Authorized Dealer ****

DEALER INSTRUCTIONS FOR ORDERING PARTS FROM LANDOLL PARTS DISTRIBUTION CENTER

Phone #: 800-423-4320 or 785-562-5381 **Fax #: 888-527-3909**
Order online: dealer.landoll.com

IDENTIFICATION PLATE

The identification plate, which lists the model number and serial number, is located on the front of the frame.

SERIAL NUMBER

The serial number is located on the identification plate.
The Following information will help decode the Grader serial number

12H250000 = xxmyyssssss

QR CODE DECAL

The Grader series QR code decal, may be scanned to link you to the most current manuals, located on the front of the frame *See Figure 8-1*

xx	= model series (i.e. 12 for Grader)
m	= month of manufacture (ex. “H” means October. The letter I is not used.)
yy	= year manutactured (ex. “25” means 2025)
sssss	= Sequential number used to track warranty and service information.

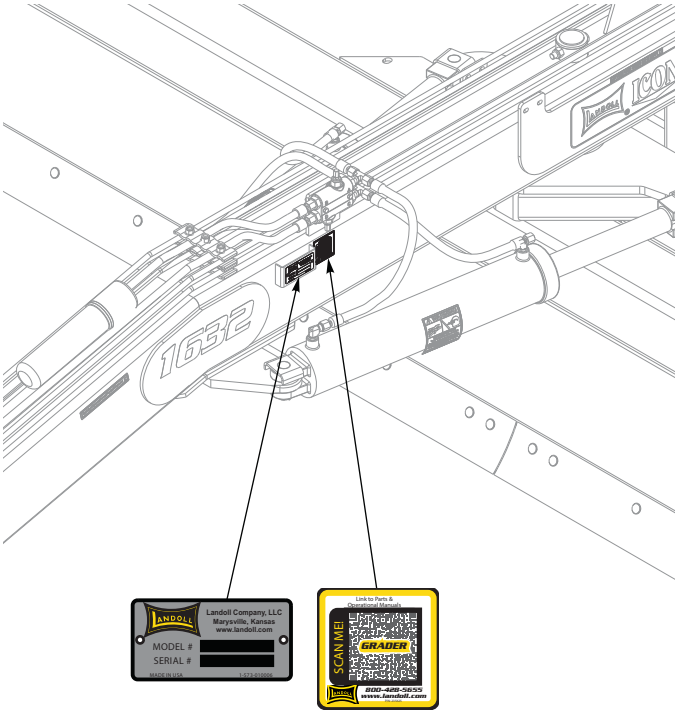

Figure 8-1: Identification Plate and QR Code Decal Location

Manuals for 1432/1432RS/1632/1632RS

Manual Number	Manual Type
F-740	Parts/Service Manual

Document Control Revision Log:

Date	Form #	Improvement(s): Description and Comments
01/16/2009	F-740	Initial Release
04/04/2014	F-740-1213	Updated Manual
01/18/2018	F-740-0118	Updated Manual
18/23/2019	F-740-0819	Updated Manual
11/25/2025	F-740-2511	New FrameMaker format, added safety decals, added QR code and new decals to decals.

Equipment from Landoll Company, LLC is built to exacting standards ensured by ISO 9001:2015 registration at all Landoll manufacturing facilities.

Model 1432/1432RS/1632/1632RS
Pull Type Grader
Parts/Service Manual

Re-Order Part Number F-740

LANDOLL COMPANY, LLC
1900 North Street
Marysville, Kansas 66508
(785) 562-5381
800-428-5655 ~ WWW.LANDOLL.COM

Copyright 2025. Landoll Company, LLC
"All rights reserved, including the right to reproduce this material or portions thereof in any form."