Pick-Up Pulverizer
Models PPD10-20, PPO10-20
Operator's and Parts Manual

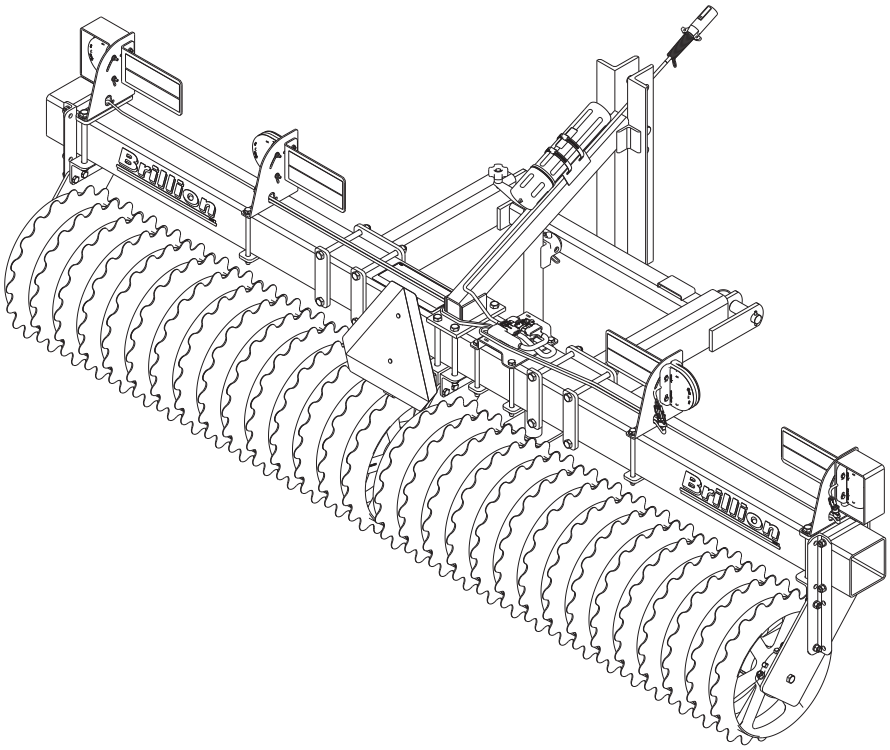

LANDOLL COMPANY, LLC
1900 North Street
Marysville, Kansas 66508
(785) 562-5381
800-428-5655 ~ WWW.LANDOLL.COM

5K804-2408

Manuals for PP Series Pulverizer

Manual Number	Manual Type
5K804	Operator's and Parts Manual

DANGER

DO NOT operate or perform any maintenance tasks on this equipment until you have completed the following:

1. **Receive proper training to operate this equipment safely.**
2. **Read and understand the operator's manual.**
3. **Be thoroughly trained on inspection and repair procedures.**

Failure to comply with this warning may result in serious injury or possibly death.

Table of Contents

1 Introduction and Safety Information

Introduction 1-1
Description of Unit 1-1
Using this Manual 1-1
Owner Assistance 1-1
Warranty Registration 1-1
Safety 1-2
Understanding Safety Statements 1-2
Transporting Safety 1-2
Safety Instructions for Towing Vehicles 1-3
Attaching, Detaching and Storage 1-3
Maintenance Safety 1-3
Protective Equipment 1-3
Prepare for Emergencies 1-3
Chemical Safety 1-3

2 Assembly

3-PT Hitch 2-3
Warning Lamp Installation 2-4
S-Tine Tire Track Remover Kit - Optional 2-6
Scraper Kit - Optional 2-8

3 Operation

Tractor Preparation 3-2
Pulverizer Preparation 3-2
Tractor Preparation for Attaching Pulverizer 3-2
Attaching Pulverizer 3-2
Detaching Pulverizer 3-2
General Operation 3-4
Track Remover Adjustment 3-4
Scraper Adjustment 3-4
Transport 3-5

4 Maintenance

General Torque Specifications 4-1
Hydraulic Fitting Torque Specifications 4-2
Fasteners 4-3
Roller Adjustment 4-3
Roller Assembly Clamp Tightening Procedure 4-3

Warning Lamps 4-4
Storage 4-4

5 Specifications

6 Instructions for Ordering Parts

7 Illustrated Parts List

Frame - Optimizer 10FT 7-1
Frame - Notched 10-16FT 7-3
Frame - Optimizer 12-10FT, Notched 18-20FT 7-5
3-PT Hitch 7-7
Bracket Assembly, Center, Notched 10-16FT 7-8
Bracket Assembly, End, Left-Hand, Notched 10-16FT 7-9
Bracket Assembly, End, Right-Hand, Notched 10-16FT 7-10
Bracket Assembly, Center, Optimizer 12-20FT, Notched 18-20FT 7-11
Wheel and Axle Assembly, Optimizer 10FT 7-12
Pipe Axle Assembly, w/Stub Shafts 7-13
Wheel and Axle Assemblies, Notched 10-16FT 7-14
Axle Clamp Assembly, 4" Pipe 7-15
Pipe Axle Assemblies w/Inner and Outer Bearings, 4" Pipe 7-16
Bearing Housing Assembly, Outer, 4" Pipe 7-17
Bearing Housing Assembly, Inner, 4" Pipe 7-18
Wheel and Axle Assemblies, Optimizer 12-20FT 7-19
Wheel and Axle Assemblies, Notched 18-20FT 7-20
Axle Clamp Assembly, 4-1/2" Pipe 7-21
Pipe Axle Assemblies w/Stub Shaft and Inner Bearing, 4-1/2" Pipe 7-22
Bearing Housing Assembly, Inner, 4-1/2" Pipe 7-23
LED Warning Lamp Installation (After 08/2013) 7-25
Warning Lamp Installation (Before 08/2013) 7-27
Scrapers, Notched Roller - Optional 7-29
Wheel Track Remover Kit - Optional 7-31
Decals 7-33
Decal Locations 7-35

8 Glossary

9 Index

Introduction and Safety Information

Introduction

The implement described in this manual has been designed with care and built by skilled workers using quality materials and processes. Proper assembly, maintenance, and safe operation will allow this machine to provide you with satisfactory use for seasons to come.

DANGER

Read this entire manual before attempting to assemble, adjust or operate this implement. Failure to comply with this warning can result in personal injury or death, damage to the implement or its components and inferior operation.

Description of Unit

The Brillion PP Series Pulverizer is designed with versatility to operate under a wide variety of soil conditions. The 3-PT Hitch offers the ability for this machine to be highly maneuverable and able to work in close quarters. A variety of Pulverizer wheel styles are offered to accommodate many types of field conditions.

Using this Manual

This manual will familiarize you with safety, assembly, operation, adjustment, and maintenance. Read this manual and follow the recommendations to help ensure safe and efficient operation.

- The information in this manual is current at time of printing. Some parts may have changed to assure top performance.
- Location reference: Right and Left designations in this manual are determined by facing the direction the implement will travel during field operation, unless otherwise stated.

Owner Assistance

If customer service or repairs are needed, contact your Brillion dealer. Implement parts should only be replaced with Brillion parts. Have the Serial Number and complete Model Number available when ordering parts from your Brillion dealer. If items covered in this manual are not understood, contact your local Brillion dealer.

Warranty Registration

To be eligible for Warranty, registration must be on file at Landoll Company, LLC. It is the responsibility of the dealer to register the machine within 10 days of purchase or lease on the Dealer Portal. Check with the dealer to verify the machine has been registered.

NOTE: IMPROPER ASSEMBLY, MODIFICATION, OR MAINTENANCE OF YOUR LANDOLL MACHINE CAN VOID YOUR WARRANTY.

Enter your product information below for quick reference. Refer to the Data Plate as shown. **See Figure 1-1.**

MODEL NUMBER _____

SERIAL NUMBER _____

DATE OF PURCHASE _____

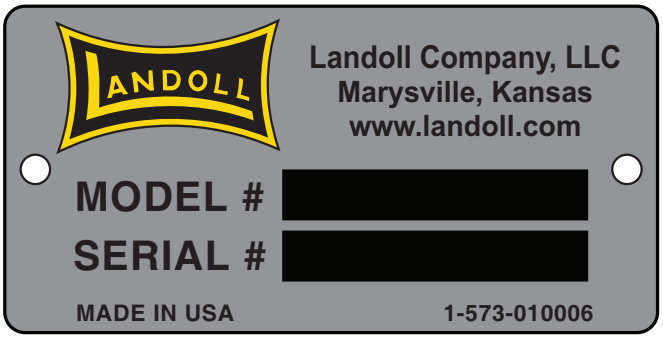

Figure 1-1: Data Plate

Safety

NOTE

Investigation has shown that nearly 1/3 of all farm accidents are caused by careless use of machinery. Insist that all people working with you or for you abide by all safety instructions.

Understanding Safety Statements

You will find various types of safety information on the following pages and on the implement decals (signs) attached to the vehicle. This section explains their meaning.

NOTICE

Special Notices that include helpful maintenance hints. Read and thoroughly understand.

CAUTION

Caution means serious equipment or other property damage can occur if instructions on this label are not properly followed.

WARNING

Warning means serious injury or death can occur if safety measures or instructions on this label are not properly followed.

DANGER

Danger means a life-threatening situation exists. Death can occur if safety measures or instructions on this label are not properly followed.

NOTE

You should read and understand the information contained in this manual and on the implement decals before you attempt to operate or maintain this equipment.

- Examine safety decals and be sure you have the correct safety decals for the implement. **See "Decals" on Pages 7-33.**
- Order replacement decals through your Brillion dealer.
- Keep these signs clean so they can be observed readily. It is important to keep these decals cleaned more frequently than the implement. Wash with soap and water or a cleaning solution as required.
- Replace decals that become damaged or lost. Also, be sure that any new implement components installed during repair include decals which are assigned to them by the manufacturer.
- When applying decals to the implement, be sure to clean the surface to remove any dirt or residue. Where possible, sign placement should protect the sign from abrasion, damage, or obstruction from mud, dirt, oil etc.

DANGER

- **Do not allow anyone to ride on the tractor or implement. Riders could be struck by foreign objects or thrown from the implement.**
- **Never allow children to operate equipment.**
- **Keep bystanders away from implement during operation.**

Transporting Safety

IMPORTANT

It is the responsibility of the owner/operator to comply with all state and local laws.

- When transporting the machine on a road or highway, use adequate warning symbols, reflectors, lights and slow moving vehicle sign as required. Slow moving tractors and towed machines can create a hazard when driven on public roads. They are difficult to see, especially at night.
- Do not tow a machine that, when fully loaded, weighs more than 1.5 times the weight of the towing vehicle.
- Carry reflectors or flags to mark the tractor and machine in case of breakdown on the road.
- Do not transport at speeds over 20 MPH under good conditions. Never travel at a speed which does not allow adequate control of steering and stopping. Reduce speed if towed load is not equipped with brakes.
- Avoid sudden stops or turns because the weight of the machine may cause the operator to lose control of the tractor.
- Use caution when towing behind articulated steering tractors; fast or sharp turns may cause the machine to shift sideways.
- Keep clear of overhead power lines and other obstructions when transporting. Know the transport height and width of your machine. **See "Specifications" on Pages 5-1.**

Safety Instructions for Towing Vehicles

The maximum travel speed is the lesser of

- The limit of the road conditions;
- The maximum specified ground speed;
  - — for towing operations as indicated in this manual or SIS;
  - — of the towed vehicle as indicated in its operator's manual, SIS, or information sign;
- The maximum ground speed of the towed equipment combination shall be limited to the lowest specified ground speed of any of the towed machines. This speed is the ground speed limitation.

EXAMPLE: If the tractor is capable of 25 mph, the first implement has a SIS for 19 mph, and the last implement's operator's manual states its specified ground speed is 15 mph, the towed equipment combination ground speed limitation is 15 mph.

Attaching, Detaching and Storage

- Do not stand between the tractor and implement when attaching or detaching machine unless both are blocked from moving.
- Lower the machine to ground when not in use.
- Block Roller so it will not roll when unhitched from the tractor.

Maintenance Safety

- Block the implement so it will not roll when working on or under it.
- Do not make adjustments or lubricate machine while it is in motion.
- Make sure all moving parts have stopped.
- Understand the procedure before doing the work. Use the proper tools and equipment.

Protective Equipment

- Wear protective clothing and equipment appropriate for the job. Avoid loose fitting clothing.
- Because prolonged exposure to loud noise can cause hearing impairment or hearing loss, wear suitable hearing protection, such as earmuffs or earplugs.

Prepare for Emergencies

- Keep a First Aid Kit and Fire Extinguisher handy.
- Keep emergency numbers for doctor, ambulance, hospital and fire department near the phone.

Chemical Safety

Agricultural chemicals can be dangerous. Improper use can seriously injure persons, animals, plants, soil and property.

- Read chemical manufacturer's instructions and store or dispose of unused chemicals as specified. Handle chemicals with care and avoid inhaling smoke from any type of chemical fire.
- Store or dispose of unused chemicals as specified by the chemical manufacturer.

Table provided for general use.

NOTES:

Assembly

CAUTION

Do not work on or under this machine unless securely blocked and supported by a hoist or tractor or by other sufficient means.

WARNING

Do not attempt to lift heavy parts (such as the frame, rockshaft, and pull hitch) manually. Use a hoist or a fork lift to move these parts into position.

NOTE

Refer to the repair Parts Manual Chapter for identification of parts and for approximate relationship of the parts in assembly. Your exact Pulverizer Model may vary slightly from the illustration.

To ensure alignment of assemblies, leave the nuts loose until completion of final assembly. Use lock washers or flat washer as specified. Spread all cotter pins.

After completion of final assembly, tighten all nuts evenly to prevent misalignment, distortion or binding. Tighten all screws and nuts to the recommended torques.

IMPORTANT

- **If pre-assembled parts or fasteners are temporarily removed, remember where they go. It is best to keep parts separated.**
- **Check that all working parts move freely, bolts are tight and cotter pins spread.**
- **Refer to the Torque Table for proper torque valves. Note the different torque requirements for bolts with locknuts.**

"Left" and "Right" refer to directions seen as if standing behind the machine and facing in the direction of forward travel.

IMPORTANT

All Harnesses must be firmly attached to machine frame members so they do not sag or become torn loose by field debris. Use the tie wraps provided.

Check to be sure the Harnesses are slack enough so as to not be stretched or interfered with while raising and lowering of the machine.

Table provided for general use.

NOTES:

3-PT Hitch

The PP Series Pulverizer is shipped assembled except for the Warning Lamps. The 3-PT Hitch may not be assembled onto the frame.

1. Support the Pulverizer assembly with a hoist or by similar means capable of supporting its weight without tipping.
2. The top straps at the center of the Pulverizer Assembly are used for shipping and will be replaced with the 3-PT Hitch center support. Remove straps, hardware will be reused.
3. Center the 3-PT Hitch on the frame tube. Attach 3-PT Hitch ends to the front of the frame tube with 5/8-11 x 8 Bolts, Lock Washers, and Nuts. **See Figure 2-1.** Position the SMV Bracket rearward with the bent portion upward. Place the SMV Bracket under the frame tube on the left side Angle/Strap. Secure with removed hardware, 5/8-11 x 8 Bolts, Lock Washers, and Nuts.
4. Install Manual Storage Canister to 3-PT Hitch with Hose Clamps.
5. Install Jack to 3-PT Hitch with provided Pin.
6. Install Hitch Pins and Bushings. Lower Hitch, install 1-1/8 x 5-3/4 Pin Assembly and 1-7/16 x 2-7/8 Bushing. Secure with Klik Pin. Upper Hitch, install 1 x 4-1/2 Clevis Pin and 1-1/4 x 1-15/16 Bushing. Secure with Klik Pin.

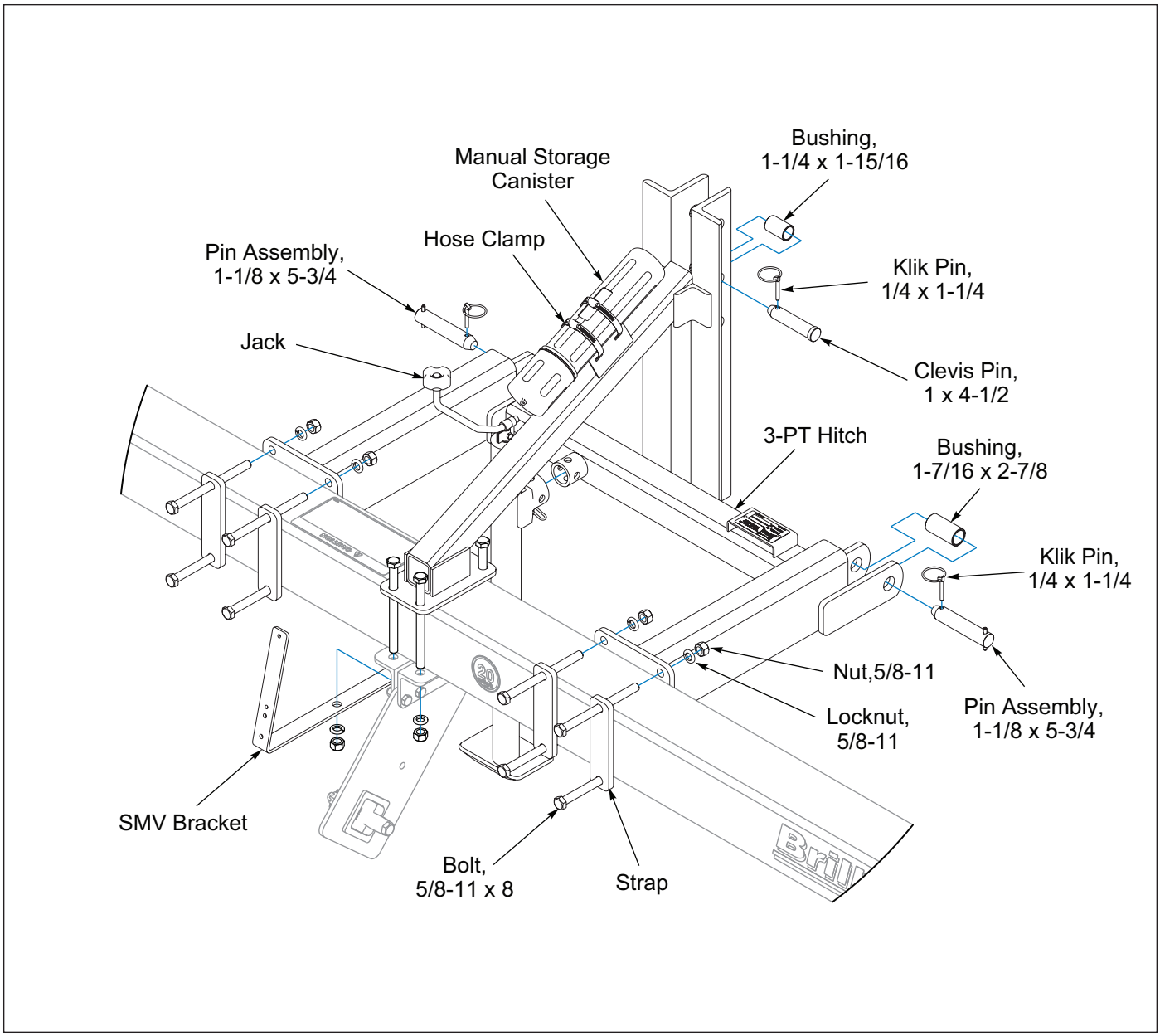

Figure 2-1: 3-PT Hitch

Warning Lamp Installation

1. Attach the inner Light Brackets to the frame tube, approximately 32" to 48" from the center of the frame dependent on the machine length. **See Figure 2-4.** Place a 2-Hole Strap under the frame. Secure with 1/2-13 x 7-1/2 Bolts, Flat Washers, and Locknuts. **See Figure 2-5.**
2. Attach the outer Light Brackets to the frame. Remove the outer Bearing Hanger Hardware and place the Light Bracket on top of the Bearing Hanger 2-Hole Strap. Reinstall the Bearing Hanger Hardware, 5/8-11 x 8 Bolts, Flat Washers, Lock Washers, and Nuts.
3. Place the Amber Lamp inside the Light Shield, attach to the outer Light Bracket to the Light Brackets with 1/4-20 x 1-3/4 Bolts. Attach the Decal Plate to the two front bolts. Secure with 1/4-20 Locknuts. Use a Flat Washer and Locknut to attach the Lamp to the Light Bracket.
4. Attach the Red Lamp to the inner mounted Light Brackets with 1/4-20 x 1-1/2 Bolts. Attach the Decal Plate to the two front bolts. Secure with 1/4-20 Locknuts. Use a Flat Washer and Locknut to attach the Lamp to the Light Bracket.
5. Attach the Flasher Control Module to the Module Bracket with 1/4-20 x 1-1/2 Bolts and Locknuts. **See Figure 2-2.**
6. Install the Module Bracket (with Flasher Control Module) near the center of the frame with 2-Hole Straps, 1/2-13 x 7-1/2 Bolts, and Locknuts.

IMPORTANT

Cords are marked Yellow Tape for Left and Green Tape for Right.

7. Lay out the Lamp Harness along the Pulverizer Frame, noting that the cords marked with Green Tape is Right Side and Yellow Tape is Left Side.
8. Connect the Lamp Harness to the Flasher Control Module. Route both cords with Green Tape along the top of frame. Route the Connectors up through the Light Bracket and connect the 3-Prong Connector into the Red Lamp and connect the 2-Prong Connector into the Amber Lamp.
9. Repeat for the Left Side (Yellow Tape).
10. Connect the 7-Pin Harness to the Flasher Control Module. Route the harness along the 3-PT Hitch and secure with Tie Wraps.
11. Adjust the Lamp Angles so Lamps are vertical when the Pulverizer is raised to transport height. **See Figure 2-3.**
12. Tighten all hardware.
13. Bundle and secure excess cord with Tie Wraps.
14. Attach the SMV Sign to the SMV Bracket with 5/16-18 x 3/4 Bolts, and Locknuts.
15. Apply the Reflector Decals to Decal Plates. The Yellow Reflector Decals should be front facing on the outer Decal Plates. The Red Reflector Decals and Orange Stripe Decals should be rear facing on both the inner and outer Decal Plates.

IMPORTANT

All Harnesses must be firmly attached to machine frame members or Hydraulic Hoses so they do not sag or become torn loose by field debris. Use the tie wraps provided.

Check to be sure the Harnesses at the center of the machine are slack enough as to not be stretched or interfered with while raising and lowering the machine for transport or field operation.

NOTE

The 7-Pin Harness connects to the Tractor Socket when in use. Allow enough harness length to reach Tractor Socket. Roll or fold up excess and secure to frame or 3-PT Hitch.

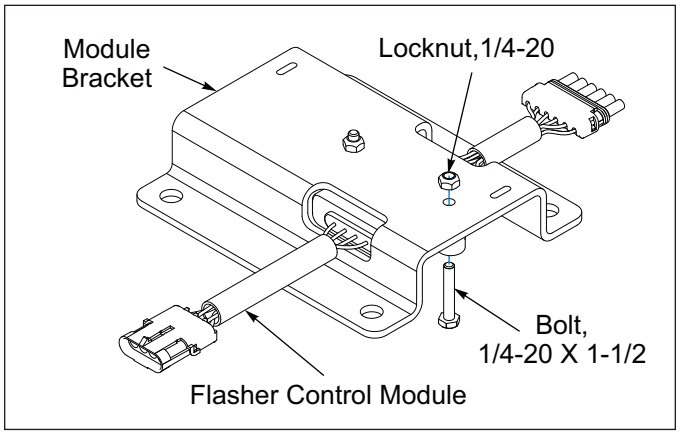

Figure 2-2: Flasher Control Module and Bracket

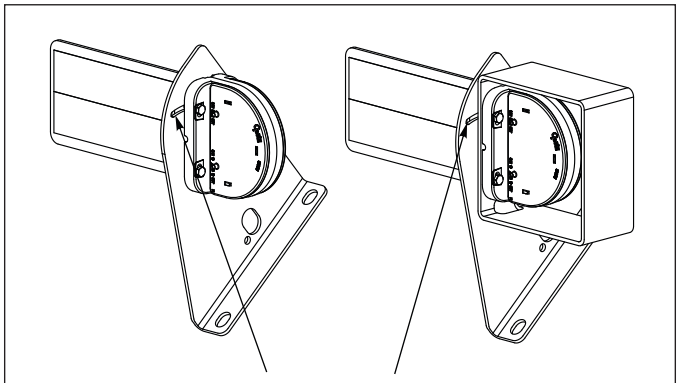

Pivot Lamps so that they are vertical to the ground when the 3-PT Hitch is raised for Transport

Figure 2-3: Lamp Adjustment

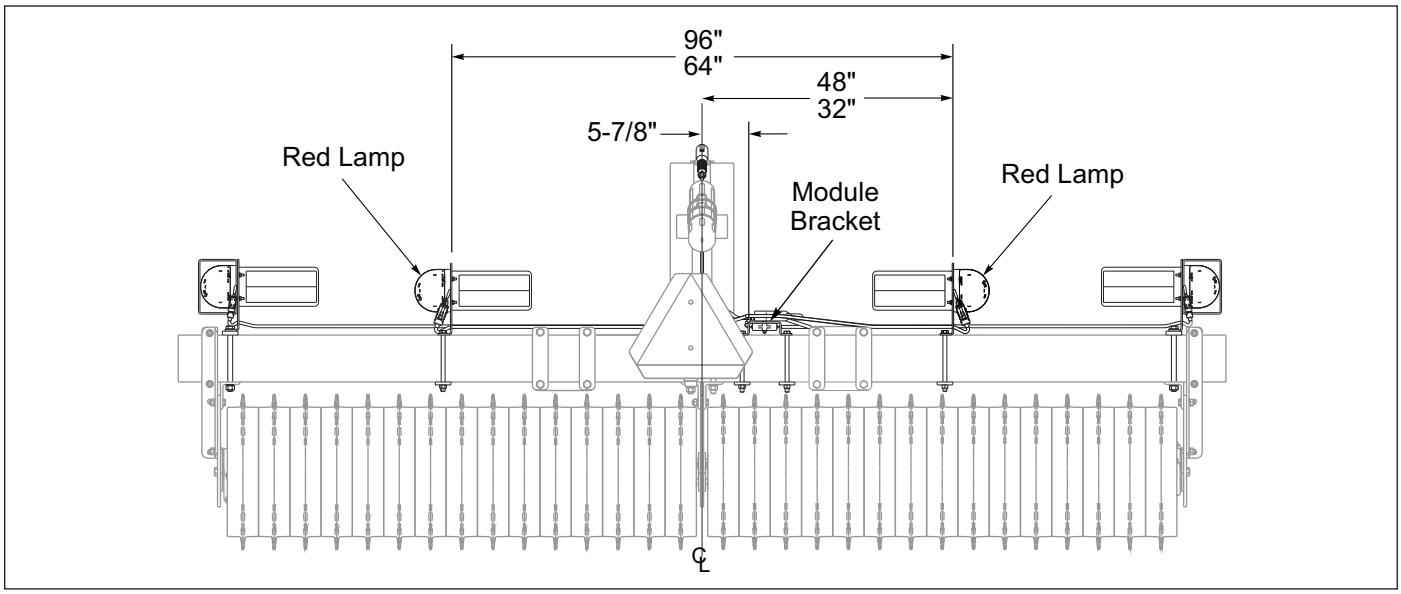

Figure 2-4: Warning Lamp - Placement Detail

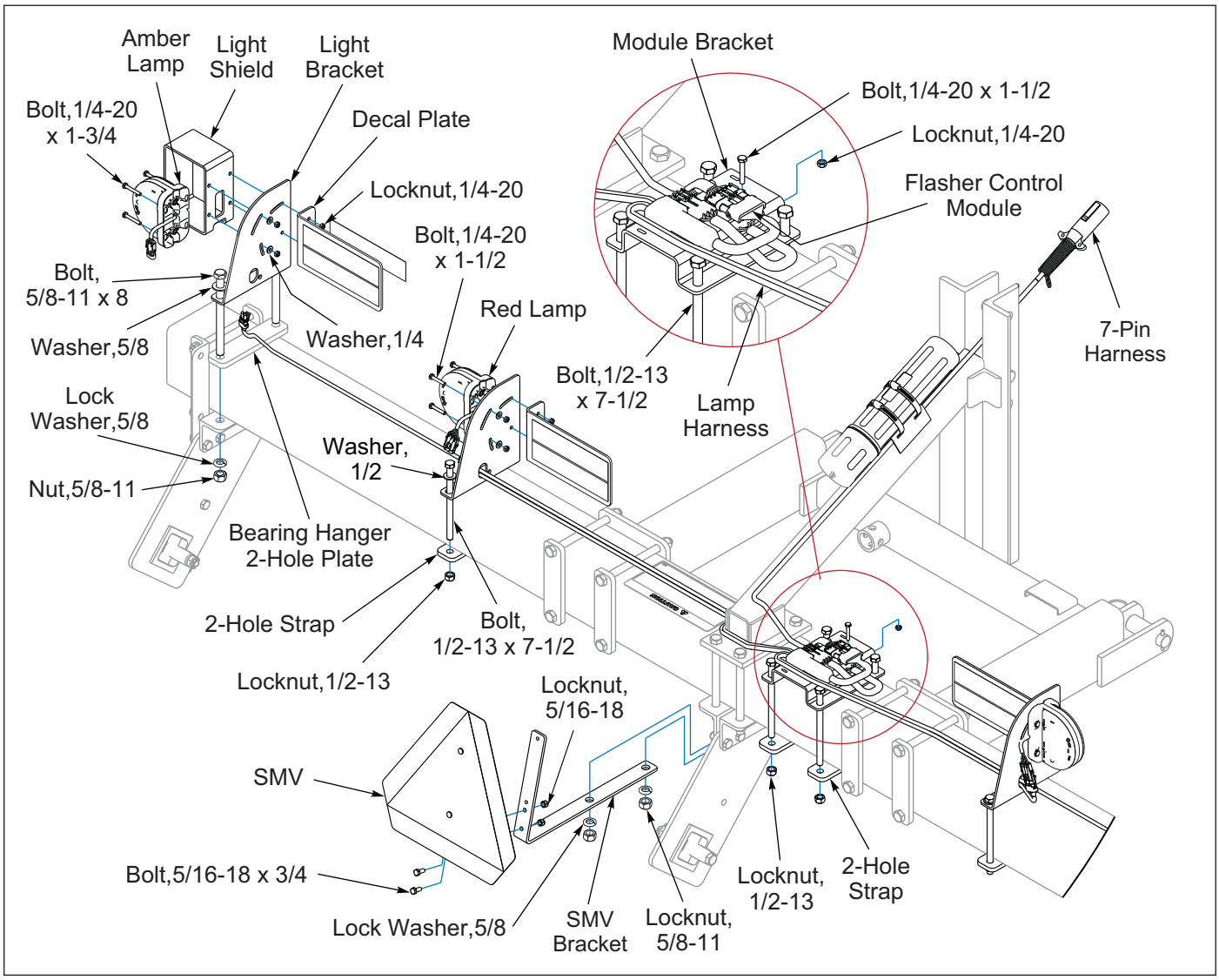

Figure 2-5: Warning Lamp Installation

S-Tine Tire Track Remover Kit - Optional

IMPORTANT

S-Tines should not be operated any deeper than necessary to remove Tractor Tire Tracks, the wet soil will stick to the Roller Wheels.

NOTE

S-Tine Tire Track Remover Kit includes six S-Tines. Additional S-Tines can be purchased and installed, or fewer S-Tines can be used.

S-Tine Brackets and S-Tines should be positioned per application. S-Tine Brackets and S-Tines can be positioned anywhere on the Tooth Tube, use **Figure 2-6** *only as a reference.*

Place the Track Remover components so that when they are assembled on the Pulverizer, the S-Tines will be centered behind each tractor tire.

1. Orient a set of Channel Adapters so 4-1/2" hole spacing is downward. **See Figure 2-6.** Position the S-Tine Brackets so the 4 holes are upward. Attach the S-Tine Bracket to bottom two holes of the Channel Adapter plate with 1/2-13 x 1-1/2 Bolts, Lock Washers and Nuts. Place the Channel Adapters with the S-Tine Bracket attached, against the front of the Pulverizer Frame Tube and attach with Long Straps, 1/2-13 x 8 Bolts, Lock Washers, and Nuts.
2. Position the Tooth Tube accordingly between the S-Tine Brackets and attach with Short Straps, 1/2-13 x 6 Bolts, Lock Washers and Nuts.
3. Attach the S-Tines onto the Tooth Tube in the desired position to cover Tractor Tire Tracks with Clamp, 7/16-14 x 3-1/2 Carriage Bolt, and Locknut.
4. Assemble the Points to the S-Tines. The suggested pattern is to assemble the Reversible Point onto the center S-Tine and a Duck Foot Point on the S-Tines on either side of the center S-Tine with 3/8-16 x 1-3/4 Plow Bolt and Flanged Locknut. **See Figure 2-7.**
5. Check for interference between the tractor tires and the S-Tines. If this occurs, mount the tooth tube on the S-Tine Brackets rearmost vertical tube. Be sure not to set the S-Tines any deeper than necessary to remove Tractor Tire Tracks. When the S-Tine draft load is increased the S-Tines may deflect back making contact with the Roller and break.

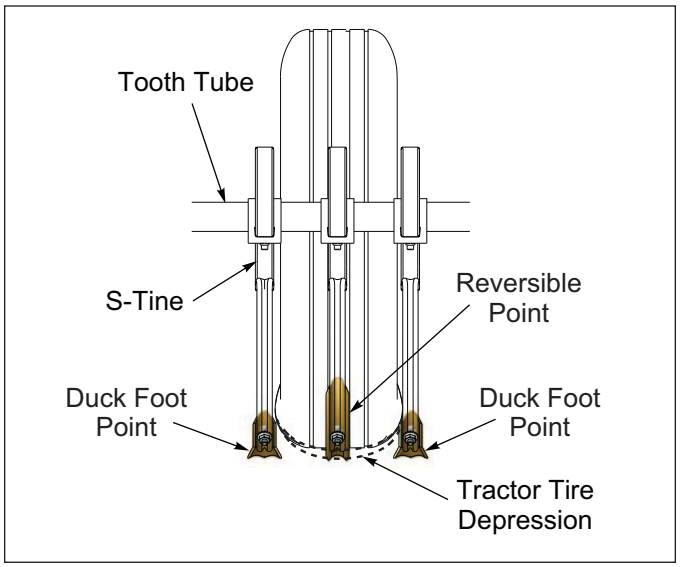

Figure 2-6: S-Tine Point Position

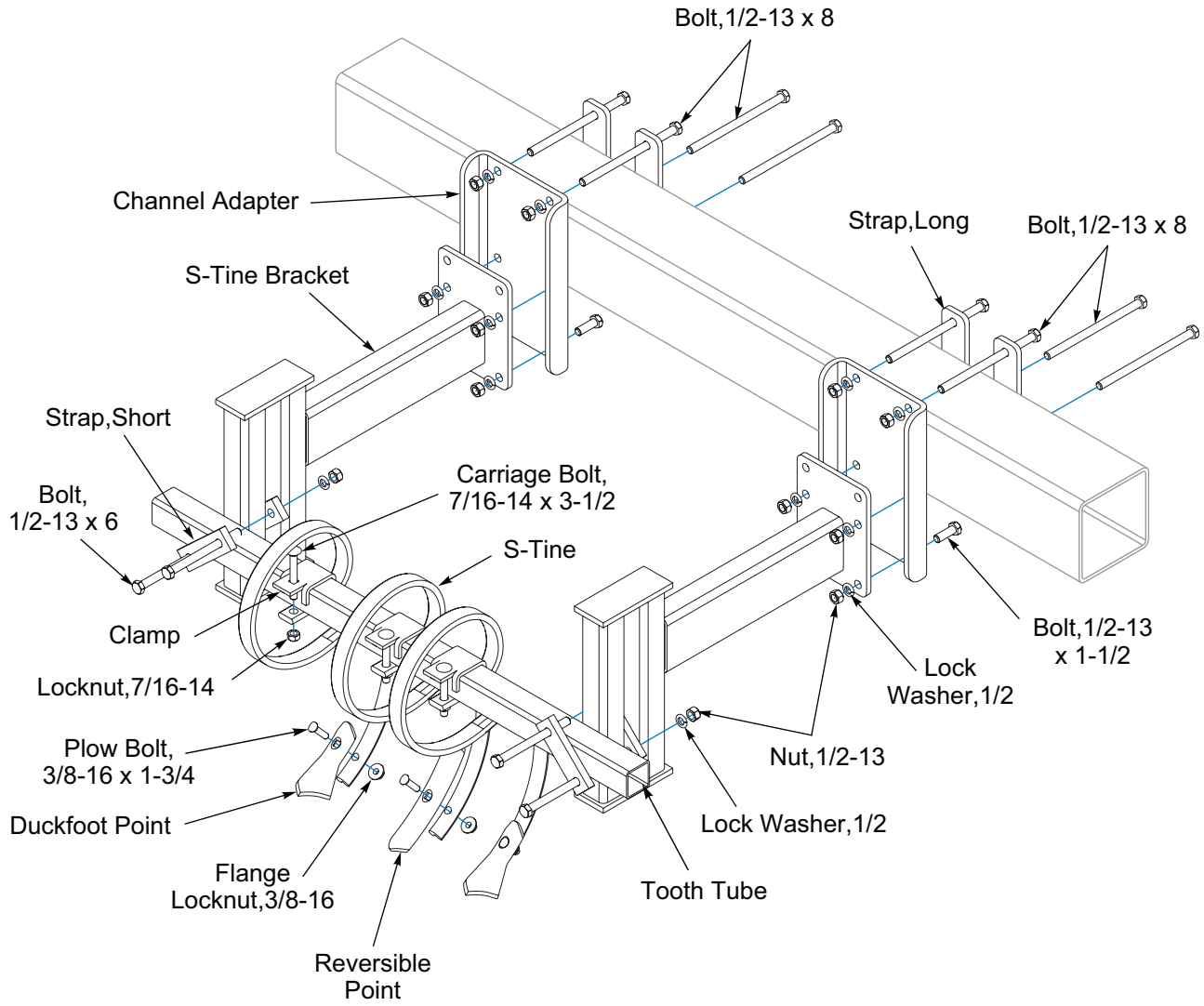

Figure 2-7: Wheel Track Remover Kit

Scraper Kit - Optional

NOTE

A Scraper can be used as a guide to achieve the 1/4" gap between the Scraper and the Notched Wheels.

1. Place the Pulverizer roller on level ground.
2. At the rear of the Pulverizer, center a Scraper Bracket over the Wheel Notches of the 2nd Wheel from each end of the Roller. Machines with three Scraper Brackets, place the third Scraper Bracket centered over the Wheel Notches of the 3rd Wheel left of the Pulverizer center. Attach the Scraper Brackets to the Pulverizer Frame with 2-Hole Strap, 5/8-11 x 8 Bolts, Lock Washers, and Nuts. **See Figure 2-8.** Machines with four Scraper Brackets, place the third and fourth Scraper Bracket centered over the Wheel Notches of a wheel on each side of the 3-PT Hitch.
3. Center Scraper Tube over the length of the roller. Place Scraper Tube under the Scraper Bracket and attach with 1/2-13 U-Bolts, Lock Washers, and Nuts.
4. Attach the Center Scraper to the Scraper Tube at the center of the machine where the two rollers come together with 3/8-16 U-Bolts, Flat Washers, Lock Washers, and Nuts. Adjust the Center Scraper so that there is a 1/4" gap between the Scraper and the Notched Wheels. **See Figure 3-2.**
5. Assemble the remaining Scrapers to the Scraper Tube with 3/8-16 U-Bolts, Flat Washers, Lock Washers, and Nuts. Adjust the Scraper Brackets as needed. The Scrapers must be centered between the Notched Wheels along with a 1/4" gap between the Scraper and Notched Wheels.
6. Tighten all Hardware.

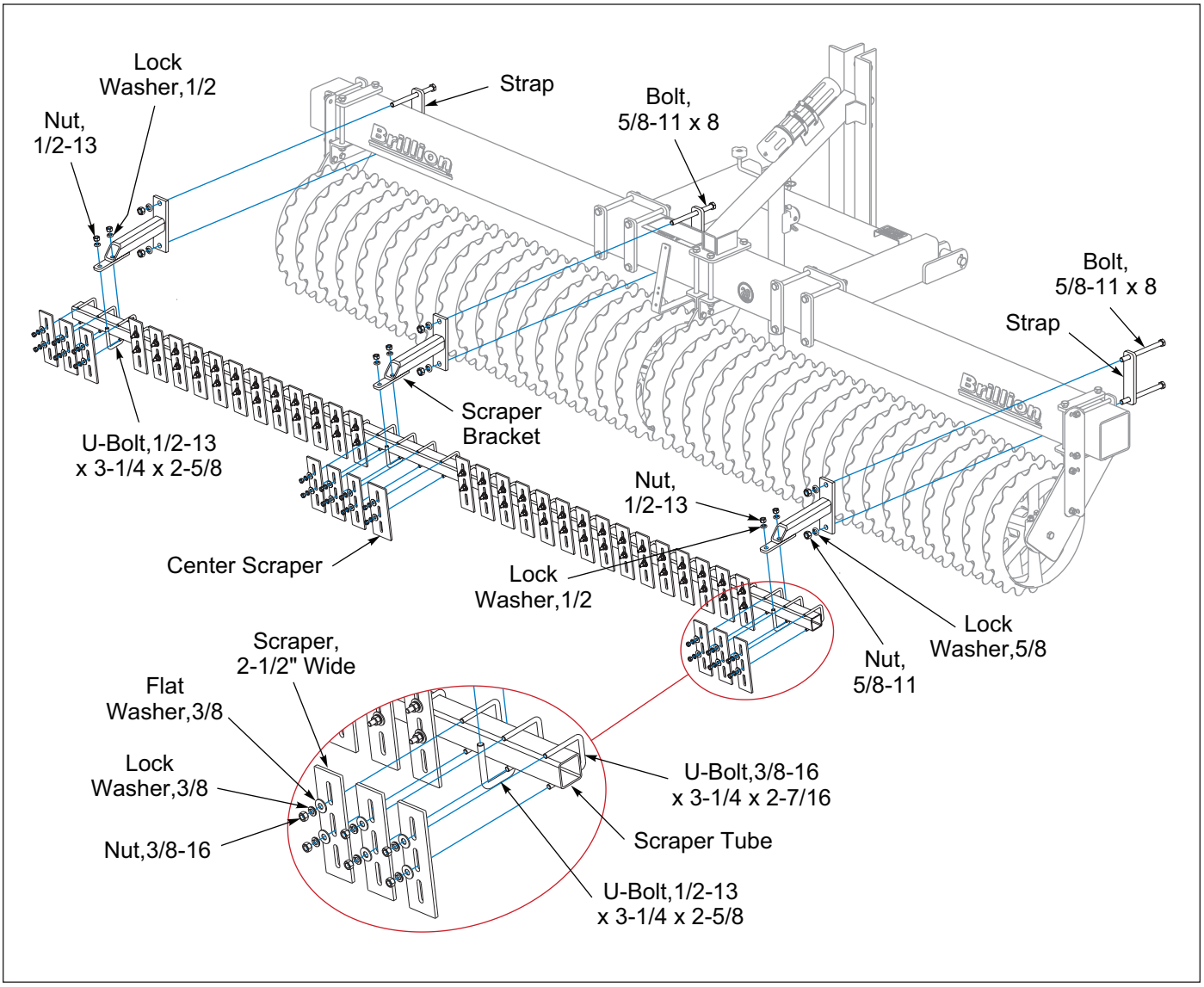

Figure 2-8: Scraper Kit - Optional

Operation

DANGER

Never allow anyone a ride on the Pulverizer at any time. Allowing a person to ride on the machine can inflict serious personal injury or death to that person.

WARNING

All 3-PT Hitch mounted equipment must be lowered to the ground, when servicing or when equipment is idle. Failure to take preventative measures against accidental lowering can result in serious personal injury.

WARNING

Always be sure that tractor hitch capacity is rated to carry the weight of the Pulverizer. Refer to “Specifications” and Tractor Operator’s Manual.

DANGER

Always lock the tractor drawbar in the center position when transporting the unit. Failure to do so can result in serious injury or death and cause damage to the equipment.

CAUTION

When transporting farm implements on public roads, it is the responsibility of the operator to abide by state and local laws concerning wide loads, speed, safety emblems and safety lighting equipment. Drive at safe speeds, particularly when rounding corners, crossing rough ground or driving on hillsides, to prevent tipping the tractor.

CAUTION

Block implement and use Jack so the machine will not roll when unhitched from tractor.

Tractor Preparation

The Brillion Pulverizer is designed to be used with a 3-PT Hitch Category 2 Free Link or a Category 2 or 3N Quick Coupler. **See Figure 3-1.**

Before attaching the implement, prepare the tractor as follows:

1. Inflate the rear tractor tires equally and add ballast according to the Tractor Operator's Manual.
2. Lock the Tractor Drawbar in the center position.

Pulverizer Preparation

1. Prior to operating the Pulverizer, inspect it thoroughly for good operating condition.
2. Replace worn or missing parts.
3. When the machine is new, check the bolt tightness after a few hours of operation. Tighten any loose nuts or bolts.

Tractor Preparation for Attaching Pulverizer

1. The Pulverizer is designed to be pulled by a Tractor equipped with a 3-PT Hitch Category 2 Free Link or Category 2, 3N Quick Coupler. **See Figure 3-1.** Be sure Tractor's Hitch Capacity is not exceeded by the Laden Mass of the Pulverizer. **Refer to Tractor Operator's Manual.**
2. Be sure Tractor is properly ballasted. A minimum 25% of Tractor and Equipment Laden Mass must be on Tractor Front Wheels in transport position to maintain stability. **See "Specifications" on page 5-1 and refer to Tractor Operator's Manual.**
3. Check the Tractor tire inflation levels to ensure that they are properly inflated for the additional Laden Pulverizer Mass. **Refer to the Tractor Operator's Manual.** Be sure not to over ballast and exceed Tractor Tire Capacity.
4. Set Tractor 3-PT Lower Links to allow lateral (torsional) float. **Refer to Tractor Operator's Manual.** If left rigid, your Brillion Pulverizer may not follow ground contours.
5. Set Lift Rod length long enough to ensure the Pulverizer can float downward in the case of a furrow or waterway. Lower Links should be the same height, leveling your Brillion Pulverizer side to side. Fine adjustments may need to be made after hookup is completed. **Refer to the Tractor Operator's Manual.**
6. Attach Pulverizer to the Tractor's 3-PT Free Link or Quick Coupler using the appropriate size pins and bushings. Be sure to use the correct hardware and that it is in good working order. **Refer to the Tractor Operator's Manual** for Quick Hitch Operation.
7. Connect 7-Pin Connector to Tractor Outlet, routing cable by avoiding pinch points.
   - Make sure the tractor has a good clean receptacle, free of dirt and corrosion.
   - Make sure the 7-Pin Connector is inserted ALL the way in. With tighter fitting pins, operator may think the Connector is all the way in, but really isn't.
   - Make sure the tractor receptacle cover latches over the keyway on the 7-Pin Connector to hold the Connector in place.
   - If an operator plugs in the 7-Pin Connector, but the lights do not seem to work right, check the above items to make sure there is a good connection with the 7-Pin Connector.
8. Raise the Pulverizer. Adjust or lock tractor sway stabilizers if equipped, centering the Pulverizer with the Tractor. **Refer to the Tractor Operator's Manual.**
9. Lower the Pulverizer, if necessary level the Pulverizer side to side (laterally) by adjusting Lift Rod length. **Refer to the Tractor Operator's Manual.**

Attaching Pulverizer

1. Attach the Pulverizer to the Tractor with the appropriate size pins and bushings based on the 3-PT Hitch Category being used. **See Figure 3-1.**
2. Raise and rotate the Jack to stored position before setting the machine in motion.
3. Connect the Electrical.
4. Raise Pulverizer.

Detaching Pulverizer

1. Lower the Pulverizer on a firm, level surface.
2. Block the Roller Wheels.
3. Rotate and lower Jack.
4. Disconnect Electrical and unhitch tractor from Pulverizer.

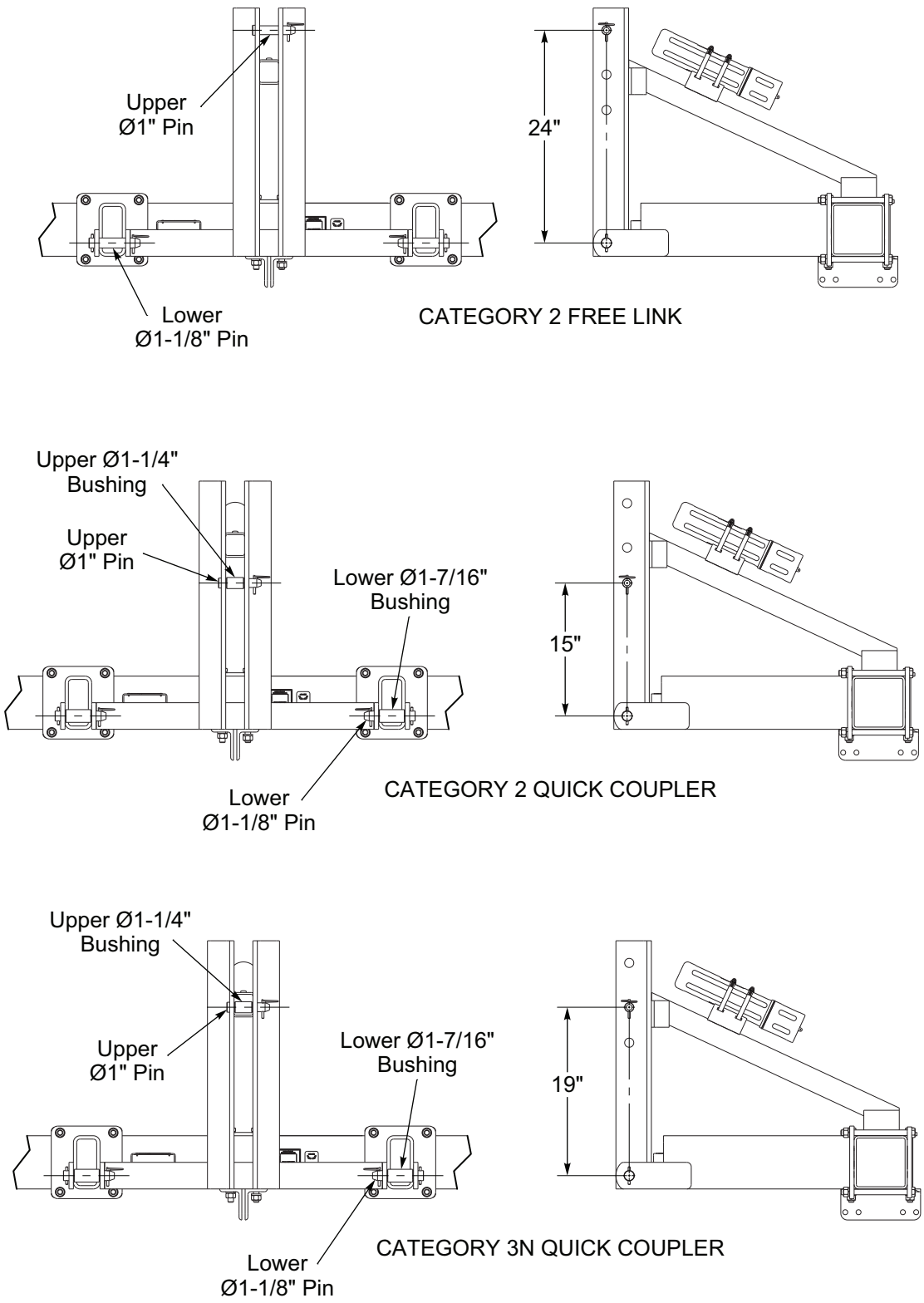

Figure 3-1: 3-PT Hitch Category Pin Positions

General Operation

1. The minimum horsepower requirement is based on the Pulverizer width. This will vary widely due to speed, moisture, and types of soils. Local dealers can help in making recommendations for your area.

   10FT and 12FT Machines: 60 horsepower

   14FT and 16FT Machines: 75 horsepower

   18FT and 20FT Machines: 90 horsepower
2. 3-PT Hitch capacity is based on the Pulverizer weight. **See "Specifications" on page 5-1.** Tractor must be sized accordingly. **Refer to Tractor Operator's Manual.**
3. Operating speed is typically 3-6 mph. Reduce speed in rocky conditions to prevent Roller Wheel breakage.
4. During operation, the pulverizer should be raised for turns.
5. Pulverizer 3-PT Hitch Jack should always be raised when operating.
6. When not in use, lower Pulverizer to a level surface. Block the Pulverizer Roller and lower Jack before unhitching from tractor.

Track Remover Adjustment

1. Loosen the Hardware that secures the Tooth Tubes to the S-Tine Brackets.
2. Raise or lower the Tooth Tubes on the S-Tine Brackets to the desired depth.
3. Re-tighten Hardware.

Scraper Adjustment

Notched Roller Scrapers are designed to keep the Notched Roller Wheels from building up with moist soil during operation. Adjustment of the Scrapers will be necessary as the Roller Wheels and/or the Scrapers wear.

NOTE

Notched Roller Scrapers are optional and reversible.

NOTE

A scraper can be used as a guide to achieve the 1/4" gap between the Scraper and the Notched Wheels.

1. Lower the Pulverizer on a level surface.
2. Push Notched Wheels against Roller Axle Flange and adjust end clamps accordingly. **See "Roller Adjustment" on page 4-3.**
3. Adjust Scrapers as needed to center the Scrapers between the Notched Wheels along with a 1/4" gap between the Scraper and Notched Wheels. **See Figure 3-2.**

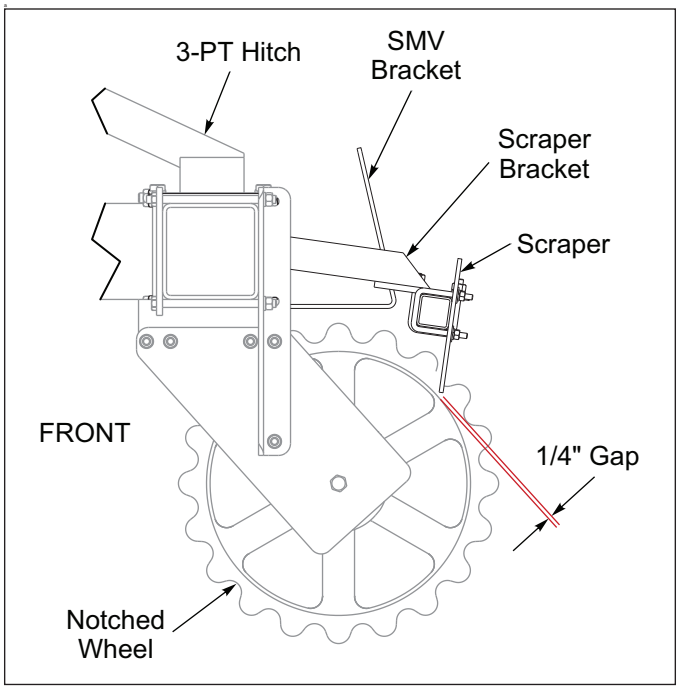

Figure 3-2: Scraper Adjustment

Transport

1. Check and follow all federal, state, and local requirements before transporting the Pulverizer.
2. The Pulverizer should be transported only by tractor required for field operation. The implement weight should not exceed more than 1.5 times the tractor weight. Maximum transport speed for the Pulverizer is 20 mph for the implement and is designated on the speed identification symbol located on the rear of the implement.

CAUTION

Excessive speed may result in loss of control of the tractor and implement, reduced braking ability, or failure of the implement tire or structure. Do not exceed the implement maximum specified ground speed regardless of the capability of the maximum tractor speed.

3. Slow down when driving on rough roads. Reduce speed when turning, or on curves and slopes to avoid tipping. Equipment altered other than the place of manufacture may reduce the maximum transport speed. Additional weight, added tanks, harrowing attachments, etc. may reduce implement load carrying capabilities.
4. Know the transport heights and widths of the unit before transporting. Use caution when transporting near bridges and power lines.

DANGER

Stay away from power lines when transporting. Electrocution can occur without direct contact.

5. Connect the Safety Warning Lights 7-Pin Plug into the tractor 7-Pin outlet, routing cord by avoiding pinch points.
6. Check to see that the tractor hitch capacity is rated to carry the weight of the Pulverizer. **Refer to Tractor Manual.**
7. Use pins and bushings that properly fit the tractor lift arms or Quick Coupler.
8. Raise the machine to full transport height.
9. Check tractor tires for proper inflation, and that wheel bolts or lug nuts are properly torqued.
10. Verify that all warning lights, SMV sign, reflectors, and safety decals are clearly visible and functioning properly.
11. Transport during daylight hours whenever possible. Always use flashing warning lights, except where such use is prohibited by law. Make sure lights, reflectors and SMV emblem are clearly visible and operating. Remove any obstructions such as dirt, mud, stalks or residue that restricts view before transporting. **See Figure 3-3.**

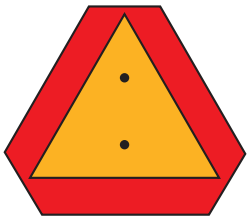

Figure 3-3: SMV Sign

Table provided for general use.

NOTES:

General Torque Specifications

LANDOLL
FASTENER TORQUE SPECIFICATIONS
(Rev. 23/04)

This chart provides general torque specifications for Standard Nuts and Caps Screws (as received condition) that are not called out on processes or drawings.

This **DOES NOT** apply if special lubrication such as graphite moly-disulfide or other extreme pressure lubricants are used.

Add 33% to the listed torque specification if the fastener is dry (solvent cleaned).

Cap screw grades are indicated by markings on the head, these vary among manufacturers.

Thick Nuts must be used on grade 8 cap screws.

SAE TORQUE SPECIFICATIONS (FOOT-POUNDS)

[ ] Indicates specifications for Prevailing Torque Nuts.

UNC Size	Grade 2	Grade 5	Grade 8
1/4 - 20	4 [5]	6 [7]	9 [11]
5/16 - 18	8 [10]	13 [16]	18 [22]
3/8 - 16	15 [19]	23 [29]	35 [43]
7/16 - 14	24 [30]	35 [43]	55 [62]
1/2 - 13	35 [43]	55 [62]	80 [100]
9/16 - 12	55 [62]	80 [100]	110 [137]
5/8 - 11	75 [94]	110 [137]	170 [212]
3/4 - 10	130 [162]	200 [250]	280 [350]
7/8 - 9	125 [156]	320 [400]	460 [575]
1 - 8	190 [237]	408 [506]	680 [850]
1-1/8 - 7	270 [337]	600 [750]	960 [1200]
1-1/4 - 7	380 [475]	840 [1050]	1426 [1782]
1-3/8 - 6	490 [612]	1100 [1375]	1780 [2225]
1-1/2 - 6	650 [812]	1460 [1825]	2360 [2950]

See back side for SAE UNF and Metric torques.

Form No. F-257-0322

SAE TORQUE SPECIFICATIONS (FOOT POUNDS)

[ ] Indicates specifications for Prevailing Torque Nuts.

UNF Size	Grade 2	Grade 5	Grade 8
1/4 - 28	5 [6]	7 [9]	10 [12]
5/16 - 24	9 [11]	14 [17]	20 [25]
3/8 - 24	17 [21]	25 [31]	35 [44]
7/16 - 20	27 [34]	40 [50]	60 [75]
1/2 - 20	40 [50]	65 [81]	90 [122]
9/16 - 18	60 [75]	90 [112]	130 [162]
5/8 - 18	85 [106]	130 [162]	180 [225]
3/4 - 16	150 [188]	220 [275]	320 [400]
7/8 - 14	140 [175]	360 [450]	500 [625]
1 - 14	210 [263]	540 [675]	760 [950]
1-1/8 - 12	300 [375]	660 [825]	1080 [1350]
1-1/4 - 12	420 [525]	920 [1150]	1500 [1875]
1-3/8 - 12	560 [700]	1260 [1575]	2010 [2512]
1-1/2 - 12	730 [912]	1640 [2050]	2660 [3325]

METRIC TORQUE SPECIFICATIONS

This chart provides torque specification for phosphate coated, Rockwell "C" 38-45 Metric Coarse Thread Class 10.9 Fasteners, Class 10.0 Nuts and Harden Flat Washers.

[ ] Indicates specifications for Prevailing Torque Nuts.

MM Size	Newton - Meters	Foot-Pounds
6	10 [14]	7 [10]
7	16 [22]	12 [16]
8	23 [32]	17 [24]
10	46 [60]	34 [47]
12	80 [101]	60 [75]
14	125 [155]	90 [115]
16	200 [240]	150 [180]
18	275 [330]	205 [245]
20	385 [450]	290 [335]
24	670 [775]	500 [625]
27	980 [1105]	730 [825]
30	1330 [1470]	990 [1090]
33	1790 [1950]	1730 [1870]
36	2325 [2515]	1730 [1870]
39	3010 [3210]	2240 [2380]

See front side for SAE UNC and notes.

Figure 4-1: General Torque Specifications

Hydraulic Fitting Torque Specifications

LANDOLL
HYDRAULIC FITTING TORQUE SPECIFICATIONS (REV. 23/04) AEROQUIP BRAND FITTINGS 37° JIC; ORS & ORB

This chart provides torque specifications for Plated Carbon Steel and Stainless Steel Fittings (as received condition) that are not called out on processes or drawings.

This **DOES NOT** apply if special lubrication such as graphite moly-disulfide or other extreme pressure lubricants are used.

Minus 65% from the listed torque specification for Brass Fittings.

TORQUE SPECIFICATIONS (FOOT-POUNDS)
[ ] Indicates specifications for Prevailing Torque Nuts.

DASH Size	37 Degree JIC	O-Ring (ORS)	O-Ring Boss (ORB)
-4	11-12	10-12	14-16
-5	15-16	-----	18-20
-6	18-20	18-20	24-26
-8	38-42	32-35	50-60
-10	57-62	46-50	72-80
-12	79-87	65-70	125-135
-14	-----	-----	160-180
-16	108-113	92-100	200-220
-20	127-133	125-140	240-280
-24	158-167	150-165	270-360
-32	245-258	-----	-----

FORM NO. F-263-2304 (1 of 3)

LANDOLL
HYDRAULIC FITTING TORQUE SPECIFICATIONS (REV. 23/04) GATES BRAND FITTINGS 37° JIC; ORS & ORB

This chart provides torque specifications for Plated Carbon Steel and Stainless Steel Fittings (as received condition) that are not called out on processes or drawings.

This **DOES NOT** apply if special lubrication such as graphite moly-disulfide or other extreme pressure lubricants are used.

Minus 65% from the listed torque specification for Brass Fittings.

TORQUE SPECIFICATIONS (FOOT-POUNDS)
[ ] Indicates specifications for Prevailing Torque Nuts.

DASH Size	37 Degree JIC	O-Ring (ORS)	O-Ring Boss (ORB)
-4	10-11	10-12	14-16
-5	13-15	-----	-----
-6	17-19	18-20	24-26
-8	34-38	32-40	37-44
-10	50-56	46-56	50-60
-12	70-78	65-80	75-83
-14	-----	65-80	-----
-16	94-104	92-105	111-125
-20	124-138	125-140	133-152
-24	156-173	150-180	156-184
-32	219-243	-----	-----

FORM NO. F-263-2304 (2 of 3)

LANDOLL
HYDRAULIC FITTING TORQUE SPECIFICATIONS (REV. 23/04) PARKER BRAND FITTINGS 37° JIC; ORS & ORB

This chart provides torque specifications for Plated Carbon Steel and Stainless Steel Fittings (as received condition) that are not called out on processes or drawings.

This **DOES NOT** apply if special lubrication such as graphite moly-disulfide or other extreme pressure lubricants are used.

Minus 65% from the listed torque specification for Brass Fittings.

TORQUE SPECIFICATIONS (FOOT-POUNDS)
[ ] Indicates specifications for Prevailing Torque Nuts.

DASH Size	37 Degree JIC	O-Ring (ORS)	O-Ring Boss (ORB)
-4	11-13	15-17	13-15
-5	14-16	-----	21-23
-6	20-22	34-36	25-29
-8	43-47	58-62	40-44
-10	55-65	100-110	58-62
-12	80-90	134-146	75-85
-14	-----	-----	-----
-16	115-125	202-218	109-121
-20	160-180	248-272	213-237
-24	185-215	303-327	238-262
-32	250-290	-----	310-340

FORM NO. F-263-2304 (3 of 3)

Figure 4-2: Hydraulic Fitting Torque Specifications

Fasteners

Before operating your Brillion machine, check all hardware for tightness. Use the Tightening Torque Table as a guide. **See Page 4-1.**

After a few hours of use, check entire machine and tighten any loose nuts or bolts. Daily or periodic checks should be made thereafter.

When replacing bolts, be sure to use fasteners of equal grade.

Roller Adjustment

IMPORTANT

The Roller Axle has Internal Bearings. When installing the Roller Axle onto the Mounting Plate Assemblies, it is important to keep the Roller Axle aligned as straight as possible to the Straight Axle Mount. If the Roller Axle is significantly out of line when sliding it onto the Straight Axle Mount, the inner race of the Internal Bearing may crack and cause premature Bearing failure.

After an initial run of 5-10 hours, check the Roller Assembly to ensure that the Wheels are tight to one another and that the Clamps are tight. If not, slide the Roller Wheels tight together and adjust the Roller Clamps per **Roller Assembly Clamp Tightening Procedure**. Tighten the Clamp U-Bolt evenly to 57 Ft-Lbs and the Set Screws if applicable, to 37 Ft-Lbs. Thereafter, check the Roller Assembly every 50-100 hours.

Roller Assembly Clamp Tightening Procedure

IMPORTANT

The tightening procedure and torque requirement is critical in keeping the Roller Assembly Clamps tight and has a significant effect on the Internal Bearing life of the Roller Axle.

1. Check Roller Axle Pipe and Clamp for burrs on mating surfaces.
2. Remove end play between Roller Wheels. Loosen the Clamps. Slide the Wheels snug against each other, centering the entire assembly on the Roller Axle. If the Roller Assembly has only one Clamp, slide the Wheels toward the fixed end of the Roller Axle.
3. Position the Clamps snuggly against the end Wheels.
4. Tighten the Clamp U-Bolt evenly to 57 Ft-Lbs. **See Figures 4-3 and 4-4.** *U-Bolt **MUST BE** tightened before the Set Screws are tightened.*
5. Tighten the Clamp Set Screws to 37 Ft-Lbs, if applicable. *Clamp for 4-1/2" diameter Roller Axle does not have Set Screws.*

Check that the Internal Bearings turn freely. You should be able to turn the Internal Bearing with your fingers. If rotation is jerky, loosen the Set Screws and U-Bolt until Internal Bearing turns smoothly. It may be necessary to loosen and reposition the Clamp

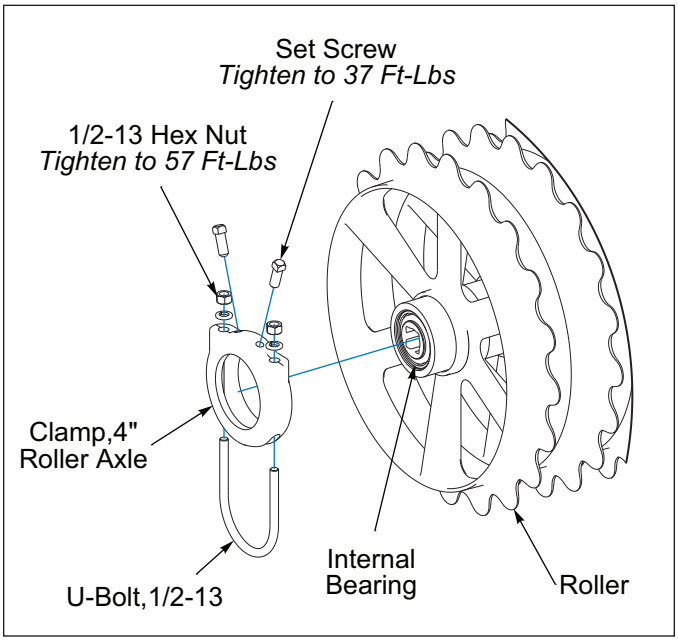

Figure 4-3: 4" Roller Axle Clamp

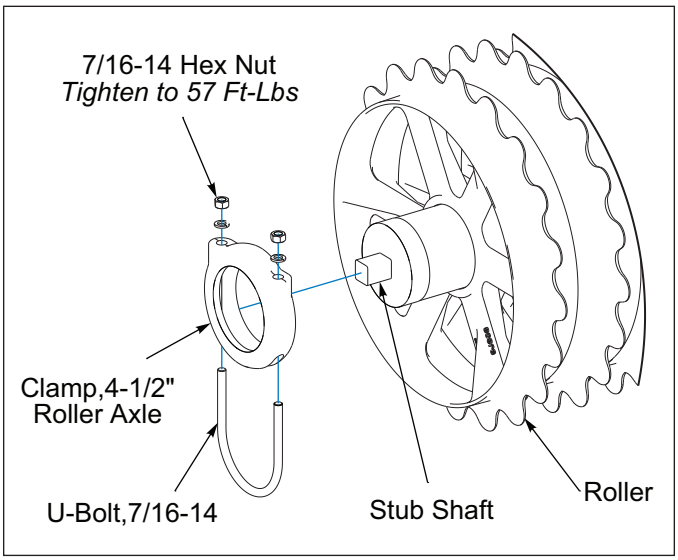

Figure 4-4: 4-1/2" Roller Axle Clamp

Warning Lamps

When connecting the 7-Pin Warning Lamp Connector:

1. Make sure the Tractor has a good clean Receptacle, free of dirt and corrosion.
2. Make sure the 7-Pin Connector is inserted ALL the way in. With tighter fitting pins, operator may think the Connector is all the way in, but it really isn't.
3. Make sure the Tractor Receptacle Cover latches over the keyway on the 7-Pin Connector to hold the Connector in place.

If an operator connects the 7-Pin Connector, but the lights Do Not seem to work right, check the above items to make sure there is a good connection with the 7-Pin Connector.

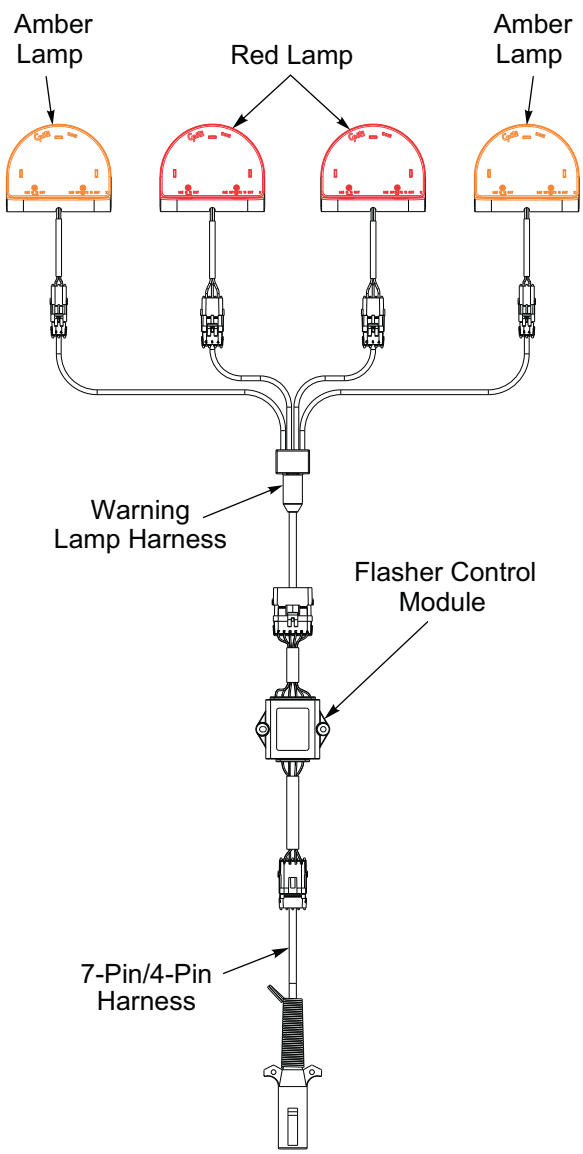

Figure 4-5: Warning Lamps

Storage

1. The service life of the Pulverizer will be extended by proper off-season storage practices. Prior to storing the unit, complete the following procedures:
   - Completely clean the unit.
   - Inspect the machine for worn or defective parts. Replace as needed.
   - Repaint all areas where the original paint is worn off.
2. Store the unit in a shed or under a tarpaulin to protect it from the weather. The ground engaging components should rest on boards, or some other object, to keep them out of the soil.
3. Raise Track Removers if installed.
4. Lower the Pulverizer on a level surface.
5. Lower Jack.
6. Choke or block Roller Wheels before unhitching from Tractor.

Specifications

Product Attributes	PP10	PP12
Approximate Weight		
(PPM) 16" Notched Gray Iron Wheels	N/A	N/A
(PPD) 20" Notched Ductile Iron Wheels	1,568 lbs. (706 kg)	1,792 lbs. (806 kg)
(PPC) 16" Crowfoot Gray Iron Wheels	N/A	N/A
(PPO) 20" Optimizer Ductile Iron Wheels	1,653 lbs. (744 kg)	1,997 lbs. (899 kg)
Working Width	10 ft. 0 in. (3.0 m)	12 ft. 0 in. (3.6 m)
Transport Width	11 ft. 2 in. (3.4 m)	13 ft. 2 in. (4.7 m)
Transport Height	Dependent Upon Tractor	Dependent Upon Tractor
Overall Length	4 ft. 3 in. (1.27 m)	4 ft. 3 in. (1.27 m)
Number of Pulverizer Wheels		
(PPM) 16" Notched Gray Iron Wheels	N/A	N/A
(PPD) 20" Notched Ductile Iron Wheels	30	36
(PPC) 16" Crowfoot Gray Iron Wheels	N/A	N/A
(PPO) 20" Optimizer Ductile Iron Wheels	20	24
Axle Size		
(PPM) 16" Notched Gray Iron Wheels	N/A	N/A
(PPD) 20" Notched Ductile Iron Wheels	4 in. (100 mm)	4 in. (100 mm)
(PPC) 16" Crowfoot Gray Iron Wheels	N/A	N/A
(PPO) 20" Optimizer Ductile Iron Wheels	4.5 in. (114 mm)	4.5 in. (114 mm)
Three-Point Hitch	Cat. 2 Free Link; Cat. 2, 3N Quick Coupler	Cat. 2 Free Link; Cat. 2, 3N Quick Coupler
Pull-Type Hitch	N/A	N/A
Scraper Kits	Optional for PPD Series	Optional for PPD Series
S-Tine Track Remover Kit	Optional	Optional
Rear Hitch	Optional	Optional
LED Safety Warning Lights & SMV Emblem	Standard	Standard
Powder Coat Paint, Red	Standard	Standard
Horsepower Requirements	60 HP (44.8 kW)	60 HP (44.8 kW)
Recommended Operating Speed	3 to 6 MPH (5 to 10 km/h)	3 to 6 MPH (5 to 10 km/h)

Specifications subject to change with or without notice.

Figure 5-1: Model Specifications (1 of 3)

Product Attributes	PP14	PP16
Approximate Weight		
(PPM) 16" Notched Gray Iron Wheels	N/A	N/A
(PPD) 20" Notched Ductile Iron Wheels	2,016 lbs. (907 kg)	2,386 lbs. (1,074 kg)
(PPC) 16" Crowfoot Gray Iron Wheels	N/A	N/A
(PPO) 20" Optimizer Ductile Iron Wheels	2,253 lbs. (1,014 kg)	2,607 lbs. (1,173 kg)
Working Width	14 ft. 0 in. (4.2 m)	16 ft. 0 in. (4.8 m)
Transport Width	15 ft. 2 in. (5.4 m)	17 ft. 2 in. (6.2 m)
Transport Height	Dependent Upon Tractor	Dependent Upon Tractor
Overall Length	4 ft. 3 in. (1.27 m)	4 ft. 3 in. (1.27 m)
Number of Pulverizer Wheels		
(PPM) 16" Notched Gray Iron Wheels	N/A	N/A
(PPD) 20" Notched Ductile Iron Wheels	42	48
(PPC) 16" Crowfoot Gray Iron Wheels	N/A	N/A
(PPO) 20" Optimizer Ductile Iron Wheels	28	32
Axle Size		
(PPM) 16" Notched Gray Iron Wheels	N/A	N/A
(PPD) 20" Notched Ductile Iron Wheels	4 in. (100 mm)	4 in. (100 mm)
(PPC) 16" Crowfoot Gray Iron Wheels	N/A	N/A
(PPO) 20" Optimizer Ductile Iron Wheels	4.5 in. (114 mm)	4.5 in. (114 mm)
Three-Point Hitch	Cat. 2 Free Link; Cat. 2, 3N Quick Coupler	Cat. 2 Free Link; Cat. 2, 3N Quick Coupler
Pull-Type Hitch	N/A	N/A
Scraper Kits	Optional for PPD Series	Optional for PPD Series
S-Tine Track Remover Kit	Optional	Optional
Rear Hitch	Optional	Optional
LED Safety Warning Lights & SMV Emblem	Standard	Standard
Powder Coat Paint, Red	Standard	Standard
Horsepower Requirements	75 HP (56 kW)	75 HP (56 kW)
Recommended Operating Speed	3 to 6 MPH (5 to 10 km/h)	3 to 6 MPH (5 to 10 km/h)

Specifications subject to change with or without notice.

Figure 5-2: Model Specifications (2 of 3)

Product Attributes	PP18	PP20
Approximate Weight		
(PPM) 16" Notched Gray Iron Wheels	N/A	N/A
(PPD) 20" Notched Ductile Iron Wheels	2,769 lbs. (1,246 kg)	3,026 lbs. (1,362 kg)
(PPC) 16" Crowfoot Gray Iron Wheels	N/A	N/A
(PPO) 20" Optimizer Ductile Iron Wheels	2,921 lbs. (1,314 kg)	3,216 lbs. (1,447 kg)
Working Width	18 ft. 0 in. (5.4 m)	20 ft. 0 in. (6 m)
Transport Width	19 ft. 2 in. (5.75 m)	21 ft. 2 in. (6.35 m)
Transport Height	Dependent Upon Tractor	Dependent Upon Tractor
Overall Length	4 ft. 3 in. (1.27 m)	4 ft. 3 in. (1.27 m)
Number of Pulverizer Wheels		
(PPM) 16" Notched Gray Iron Wheels	N/A	N/A
(PPD) 20" Notched Ductile Iron Wheels	54	60
(PPC) 16" Crowfoot Gray Iron Wheels	N/A	N/A
(PPO) 20" Optimizer Ductile Iron Wheels	36	40
Axle Size		
(PPM) 16" Notched Gray Iron Wheels	N/A	N/A
(PPD) 20" Notched Ductile Iron Wheels	4.5 in. (114 mm)	4.5 in. (114 mm)
(PPC) 16" Crowfoot Gray Iron Wheels	N/A	N/A
(PPO) 20" Optimizer Ductile Iron Wheels	4.5 in. (114 mm)	4.5 in. (114 mm)
Three-Point Hitch	Cat. 2 Free Link; Cat. 2, 3N Quick Coupler	Cat. 2 Free Link; Cat. 2, 3N Quick Coupler
Pull-Type Hitch	N/A	N/A
Scraper Kits	Optional for PPD Series	Optional for PPD Series
S-Tine Track Remover Kit	Optional	Optional
Rear Hitch	Optional	Optional
LED Safety Warning Lights & SMV Emblem	Standard	Standard
Powder Coat Paint, Red	Standard	Standard
Horsepower Requirements	90 HP (67.2 kW)	90 HP (67.2 kW)
Recommended Operating Speed	3 to 6 MPH (5 to 10 km/h)	3 to 6 MPH (5 to 10 km/h)

Specifications subject to change with or without notice.

Figure 5-3: Model Specifications (3 of 3)

Table provided for general use.

NOTES:

Instructions for Ordering Parts

**** Repair parts must be ordered through an Authorized Dealer ****

DEALER INSTRUCTIONS FOR ORDERING PARTS FROM LANDOLL PARTS DISTRIBUTION CENTER

Phone #: 800-423-4320 or 785-562-5381 **Fax #: 888-527-3909**

Order online: dealer.landoll.com

DATA PLATE

The Data Plate, which lists the model number and serial number, is located on the right side of the Pulverizer.

SERIAL NUMBER

The following information will help decode the trailer serial number.

PXD2400123 = xxmyyssssss

xx	= model series (i.e. “PX” for all Pulverizers)
m	= month of manufacture (ex. “D” means April. The letter I is not used.)
yy	= last digits of the year manufactured (ex. “24” means 2024)
sssss	= Sequential number used to track warranty and service information.

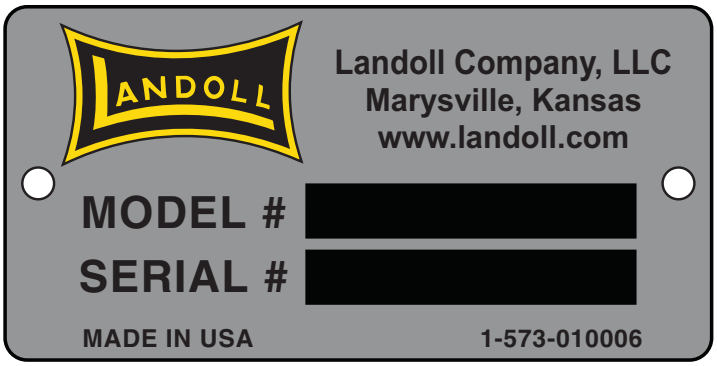

Figure 6-1: Data Plate

Illustrated Parts List

Frame - Optimizer 10FT

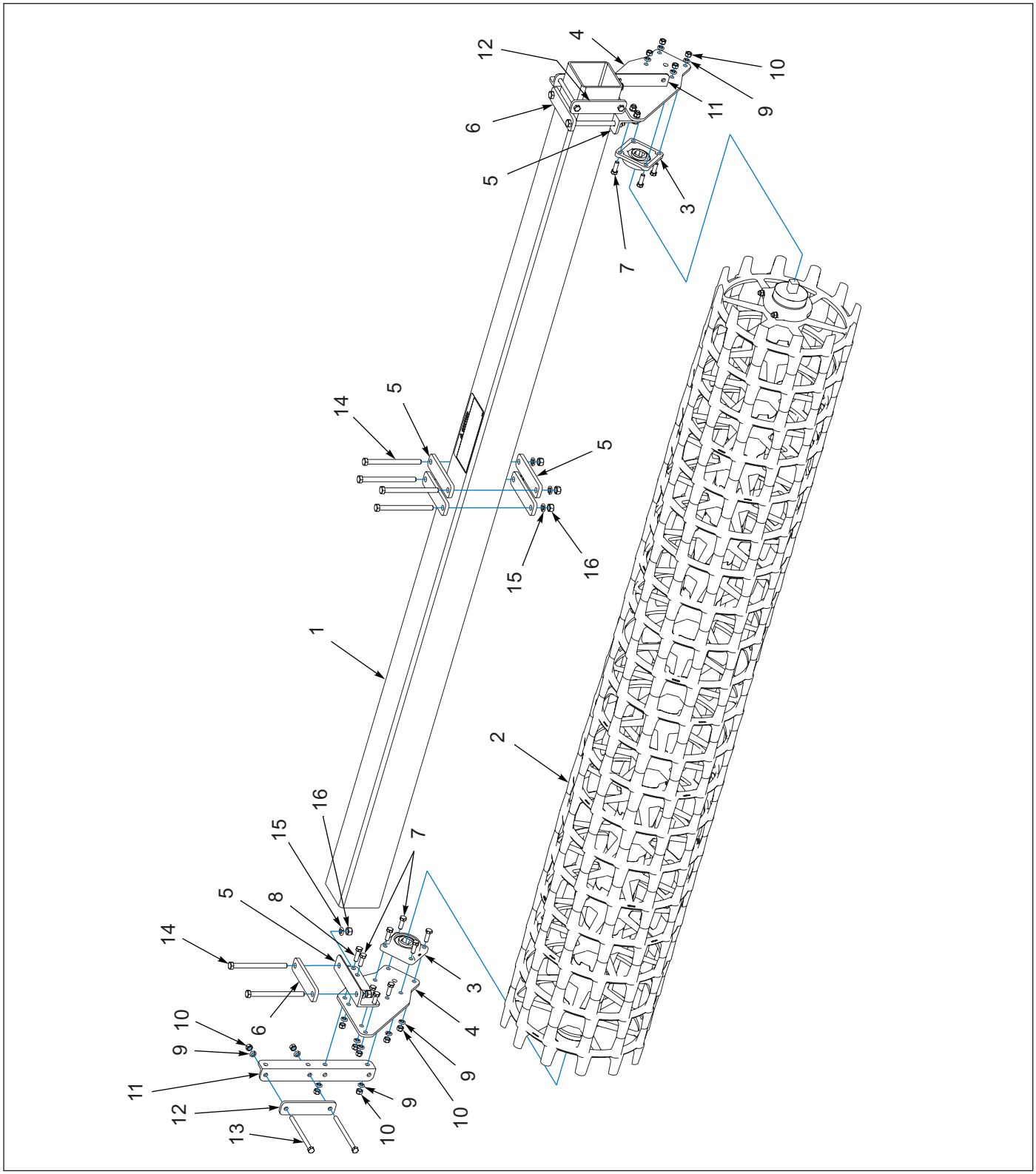

Figure 7-1: Frame - Optimizer 10FT

Frame - Optimizer 10FT

ITEM	PART NUMBER	DESCRIPTION	QTY
1	5K726	TUBE 10' FRAME	1
2	6K481	WHEEL & AXLE ASY-POT10/XLWO120	1
3	2J417	BEARING ASSEMBLY	2
4	9J004	PLATE	2
5	8J099	ANGLE	2
6	3K321	STRAP	6
7	1-654-010055-03	SCREW,HEX CAP,1/2-13UNCX1-1/2	16
8	1-654-010055-04	SCREW,HEX CAP,1/2-13UNCX1-3/4	2
9	1-861-010034-13	WASHER, LKG HLCL SPR, 1/2	22
10	1-512-010007-09	NUT, HEX 1/2-13 GR2 ZP	22
11	3K318	ANGLE 2X2X5/16X16-3/4	2
12	3K320	STRAP	2
13	1-654-010055-20	SCREW,HXCP,1/2-13UNCX7-1/2GR5	4
14	1-654-010059-21	SCREW,HEX CAP,5/8-11UNCX8 GR5	8
15	1-861-010034-15	WASHER,LKG,HLCL SPR,5/8	8
16	1-512-010007-11	NUT, HEX 5/8-11 GR2 ZP	8

Frame - Notched 10-16FT

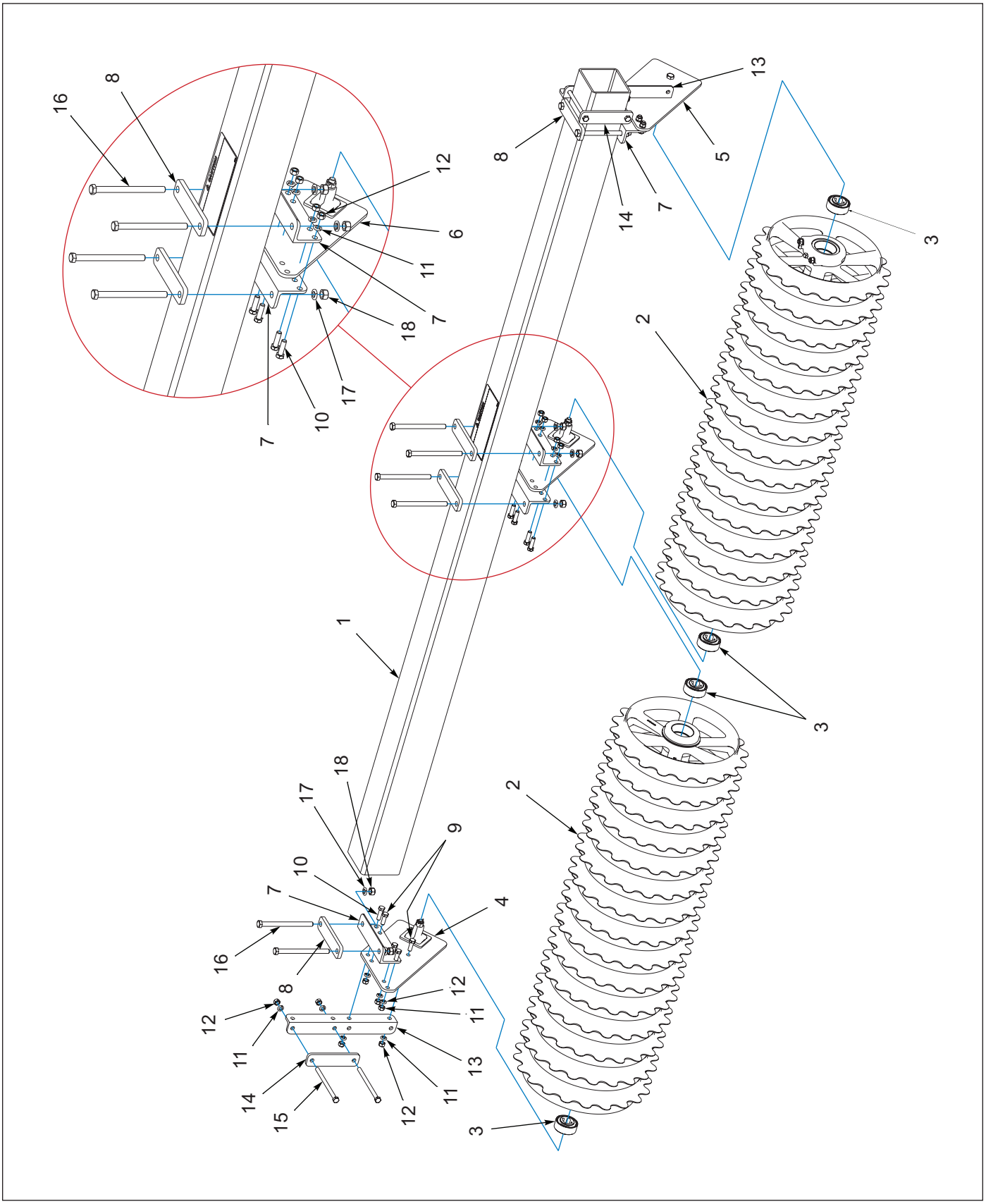

Figure 7-2: Frame - Notched 10-16FT

Frame - Notched 10-16FT

ITEM	PART NUMBER	DESCRIPTION	QTY
1	5K726	TUBE 10' FRAME **(134") (PP10)**	1
1	5K727	TUBE 12' FRAME **(158") (PP12)**	1
1	5K728	TUBE 14' FRAME **(182") (PP14)**	1
1	5K729	TUBE 16' FRAME **(206") (PP16)**	1
2	9J028	WHEEL & AXLE ASSY **(PPD10) (INCL. ITEM 3) (SEE PAGE 7-14)**	2
2	8J069	WHEEL&AXLE ASSY NOTCH DUCTILE (PPD12) (INCL. ITEM 3) **(SEE PAGE 7-14)**	2
2	8J068	WHEEL&AXLE ASSY NOTCH DUCTILE (PPD14) (INCL. ITEM 3)**(SEE PAGE 7-14)**	2
2	9J027	WHEEL & AXLE ASY **(PPD16) (INCL. ITEM 3) (SEE PAGE 7-14)**	2
3	9C016	BEARING	1
4	8J999	R.H. END BRACKET ASY. **(SEE PAGE 7-10)**	1
5	8J998	L.H. END BRACKET ASY. **(SEE PAGE 7-9)**	1
6	8J993	CENTER BRACKET ASY **(SEE PAGE 7-8)**	1
7	8J099	ANGLE	4
8	3K321	STRAP	4
9	1-654-010055-03	SCREW,HEX CAP,1/2-13UNCX1-1/2	8
10	1-654-010055-04	SCREW,HEX CAP,1/2-13UNCX1-3/4	6
11	1-861-010034-13	WASHER, LKG HLCL SPR, 1/2	18
12	1-512-010007-09	NUT, HEX 1/2-13 GR2 ZP	18
13	3K318	ANGLE 2X2X5/16X16-3/4	2
14	3K320	STRAP	2
15	1-654-010055-20	SCREW,HXCP,1/2-13UNCX7-1/2GR5	4
16	1-654-010059-21	SCREW,HEX CAP,5/8-11UNCX8 GR5	8
17	1-861-010034-15	WASHER,LKG,HLCL SPR,5/8	8
18	1-512-010007-11	NUT, HEX 5/8-11 GR2 ZP	8

Frame - Optimizer 12-10FT, Notched 18-20FT

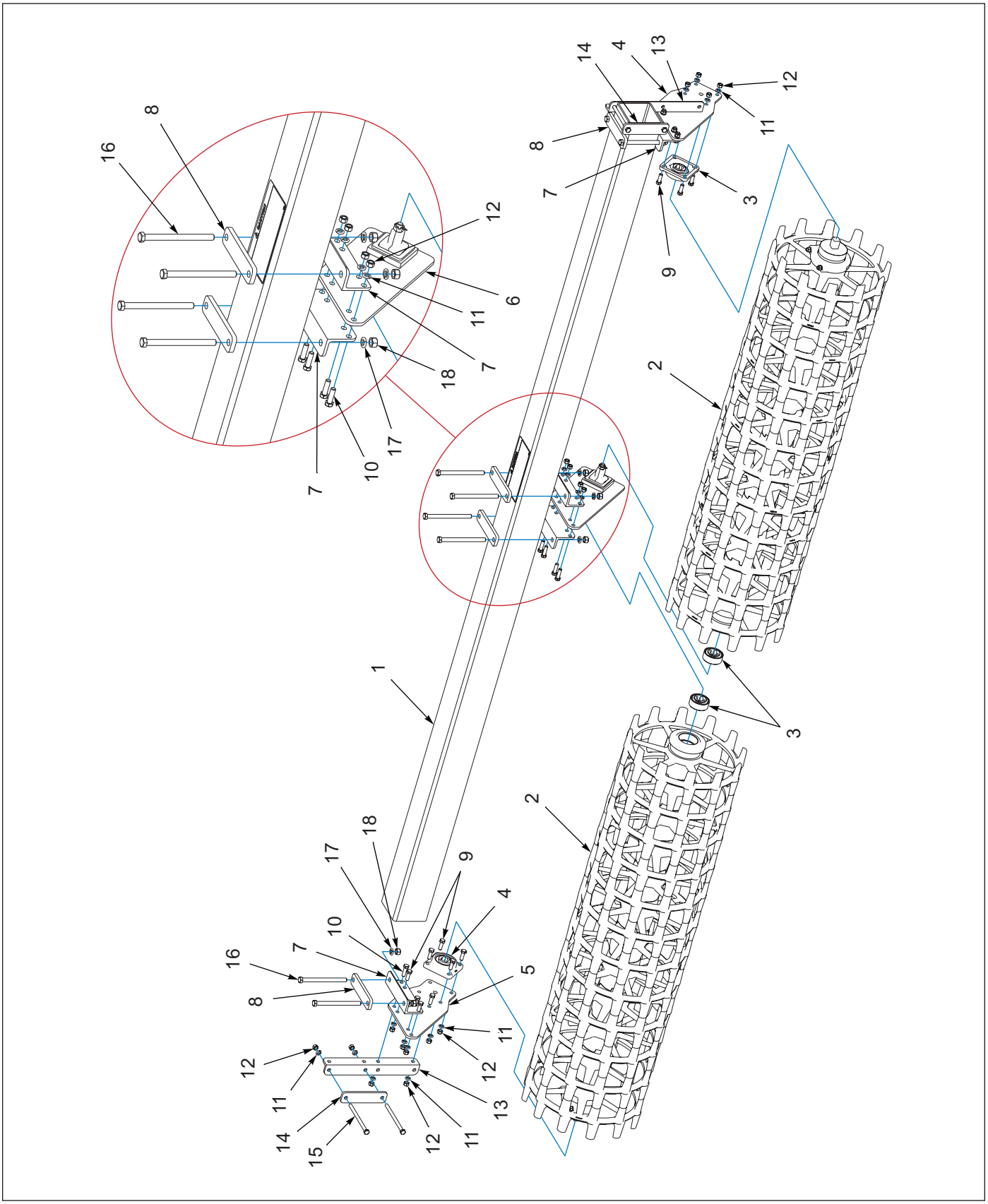

Figure 7-3: Frame - Optimizer 12-20FT, Notched 18-20FT

Frame - Optimizer 12-20FT, Notched 18-20FT

ITEM	PART NUMBER	DESCRIPTION	QTY
1	5K727	TUBE 12' FRAME **(158") (PP12)**	1
1	5K728	TUBE 14' FRAME **(182") (PP14)**	1
1	5K729	TUBE 16' FRAME **(206") (PP16)**	1
1	5K730	TUBE 18' FRAME **(232") (PP18)**	1
1	5K731	TUBE 20' FRAME **(256") (PP20)**	1
2	6K485	WHEEL & AXLE ASSY - POT12 **(PPO12) (INCLUDES ITEM 3) (SEE PAGE 7-19)**	2
2	6K488	WHEEL & AXLE ASSY - POT14 **(PPO14) (INCLUDES ITEM 3) (SEE PAGE 7-19)**	2
2	6K490	WHEEL & AXLE ASSY - POT16 **(PPO16) (INCLUDES ITEM 3) (SEE PAGE 7-19)**	2
2	6K492	WHEEL & AXLE ASSY - POT18 **(PPO18) (INCLUDES ITEM 3) (SEE PAGE 7-19)**	2
2	6K494	WHEEL & AXLE ASSY - POT20 **(PPO20) (INCLUDES ITEM 3) (SEE PAGE 7-19)**	2
2	3K323	WHEEL & AXLE ASSEMBLY **(PPD18) (INCLUDES ITEM 3) (SEE PAGE 7-20)**	2
2	5K744	WHEEL & AXLE ASSEMBLY **(PPD20) (INCLUDES ITEM 3) (SEE PAGE 7-20)**	2
3	9C016	BEARING **(1-3/16 SQ BORE)**	1
4	2J417	BEARING ASSEMBLY	2
5	9J004	PLATE	2
6	9J007	CENTER BRACKET ASSY **(SEE PAGE 7-11)**	1
7	8J099	ANGLE	4
8	3K321	STRAP	4
9	1-654-010055-03	SCREW,HEX CAP,1/2-13UNCX1-1/2	16
10	1-654-010055-04	SCREW,HEX CAP,1/2-13UNCX1-3/4	6
11	1-861-010034-13	WASHER, LKG HLCL SPR, 1/2	26
12	1-512-010007-09	NUT, HEX 1/2-13 GR2 ZP	26
13	3K318	ANGLE 2X2X5/16X16-3/4	2
14	3K320	STRAP	2
15	1-654-010055-20	SCREW,HXCP,1/2-13UNCX7-1/2GR5	4
16	1-654-010059-21	SCREW,HEX CAP,5/8-11UNCX8 GR5	8
17	1-861-010034-15	WASHER,LKG,HLCL SPR,5/8	8
18	1-512-010007-11	NUT, HEX 5/8-11 GR2 ZP	8

3-PT Hitch

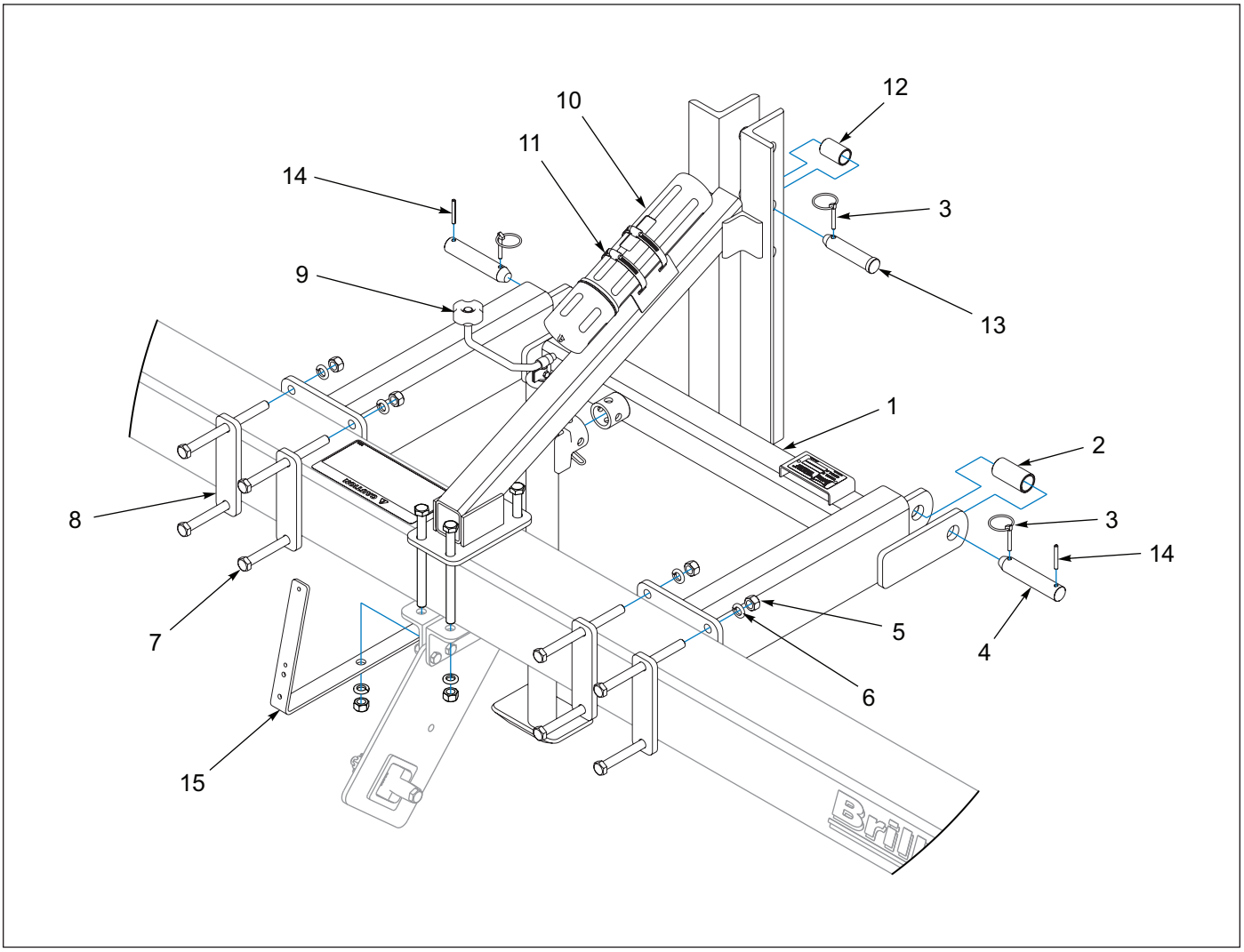

Figure 7-1: 3-PT Hitch

3-PT Hitch

ITEM	PART NUMBER	DESCRIPTION	QTY
1	5K736	3 POINT HITCH WLDMT	1
2	5D158	SLEEVE **(1-7/16 X 2-7/8)**	2
3	1-557-010327	PIN LYNCH 1/4X1-1/4	3
4	5D156	PIN ASSEMBLY 1-1/8X5-3/4 **(INCLUDES ITEM 14)**	2
5	1-512-010007-11	NUT, HEX 5/8-11 GR2 ZP	8
6	1-861-010034-15	WASHER,LKG,HLCL SPR,5/8	8
7	1-654-010059-21	SCREW,HEX CAP,5/8-11UNCX8 GR5	8
8	3K321	STRAP	4
9	4J867	DRAWBAR JACK	1
10	1-116-010019	BOX, MANUAL STORAGE	1
11	105-0093	HOSE CLAMP 4-1/2 IDEAL #5264	2
12	5D157	SLEEVE **(1-1/4 X 1-15/16)**	1
13	6D529	CLEVIS PIN 1.0 X 4.5	1
14	1-647-010004221	PIN,SPRING 1/4X2 SLOTTED	2
15	9J029	SMV BRACKET	1

Bracket Assembly, Center, Notched 10-16FT

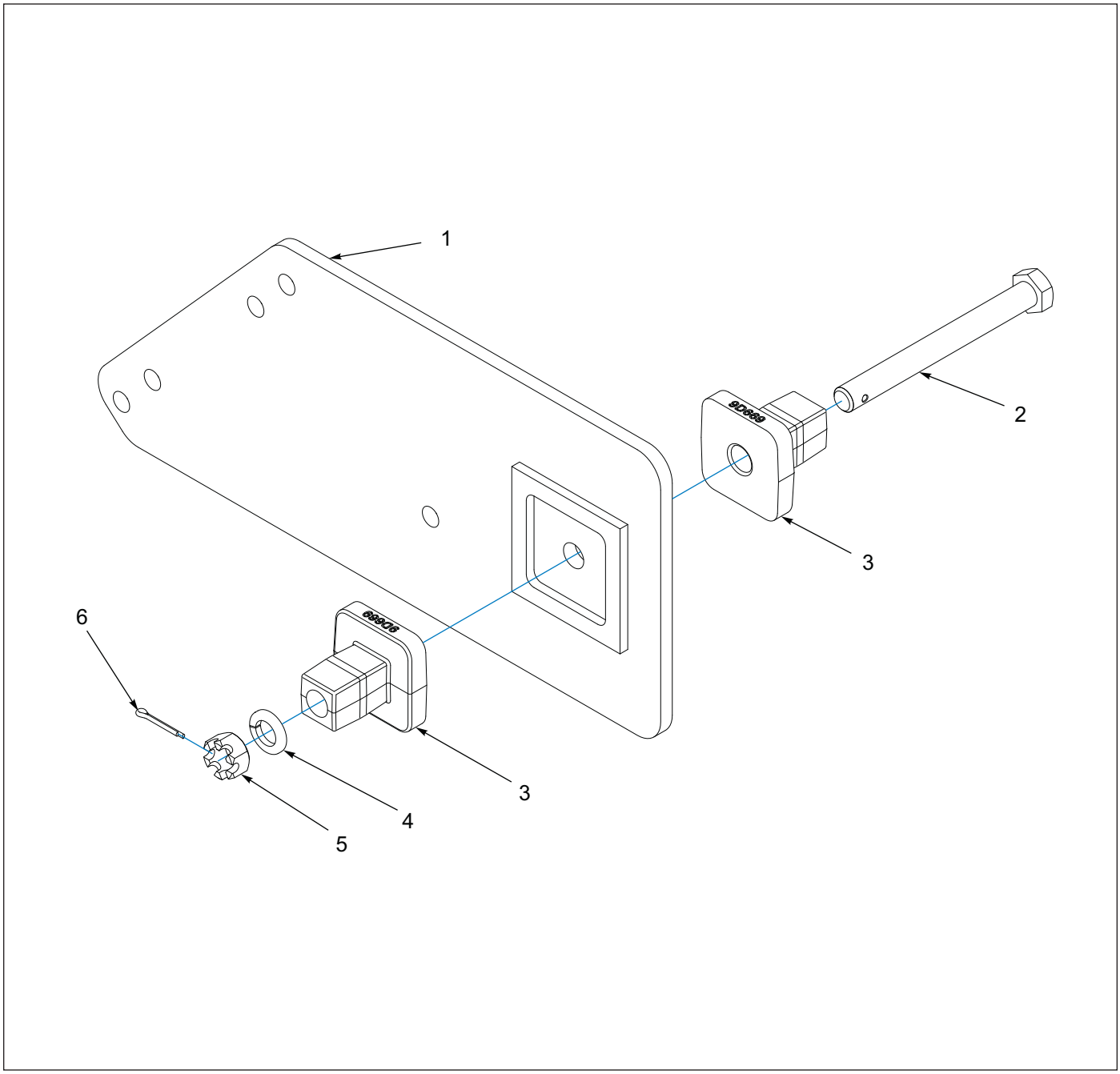

Figure 7-2: Bracket Assembly, Center, Notched 10-16FT

Bracket Assembly, Center, Notched 10-16FT

ITEM	PART NUMBER	DESCRIPTION	QTY
	8J993	CENTER BRACKET ASM	1
1	8J994	CENTER BRACKET	1
2	9D866	DRILLED BOLT	1
3	9D669	STRAIGHT AXLE MOUNT	2
4	1-861-010034-15	WASHER, LKG, HLCL SPR,5/8	1
5	4D529	SLOTTED NUT 5/8-11 ZP	1
6	101386	COTTER PIN 1/8 X 1	1

Bracket Assembly, End, Left-Hand, Notched 10-16FT

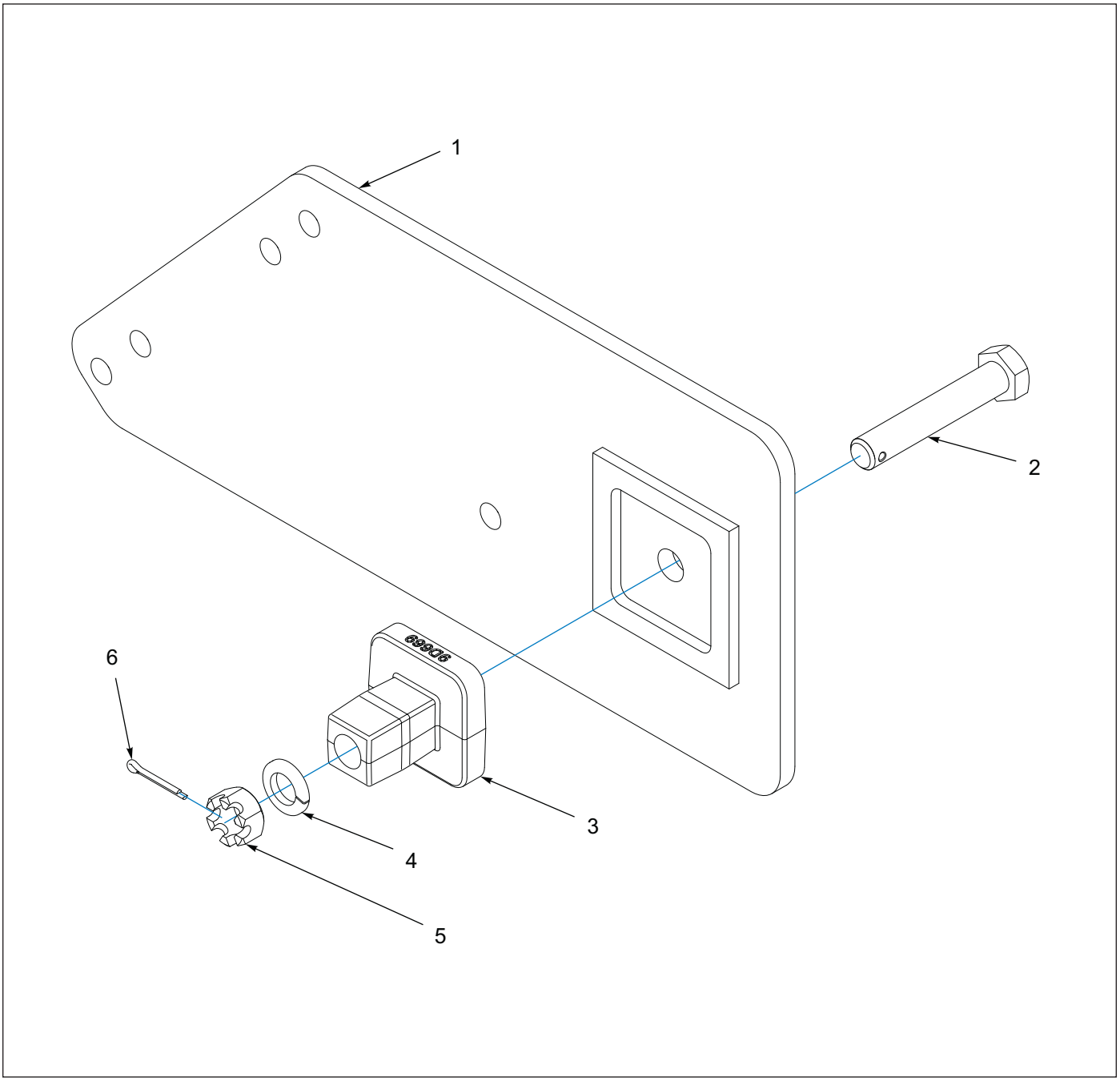

Figure 7-3: Bracket Assembly, End, Left-Hand, Notched 10-16FT

Bracket Assembly, End, Left-Hand, Notched 10-16FT

ITEM	PART NUMBER	DESCRIPTION	QTY
	8J998	L.H. END BRACKET ASM	1
1	8J996	END BRACKET L.H.	1
2	9D864	DRILLED BOLT	1
3	9D669	STRAIGHT AXLE MOUNT	1
4	1-861-010034-15	WASHER, LKG, HLCL SPR, 5/8	1
5	4D529	SLOTTED NUT 5/8-11 ZP	1
6	101386	COTTER PIN 1/8 X 1	1

Bracket Assembly, End, Right-Hand, Notched 10-16FT

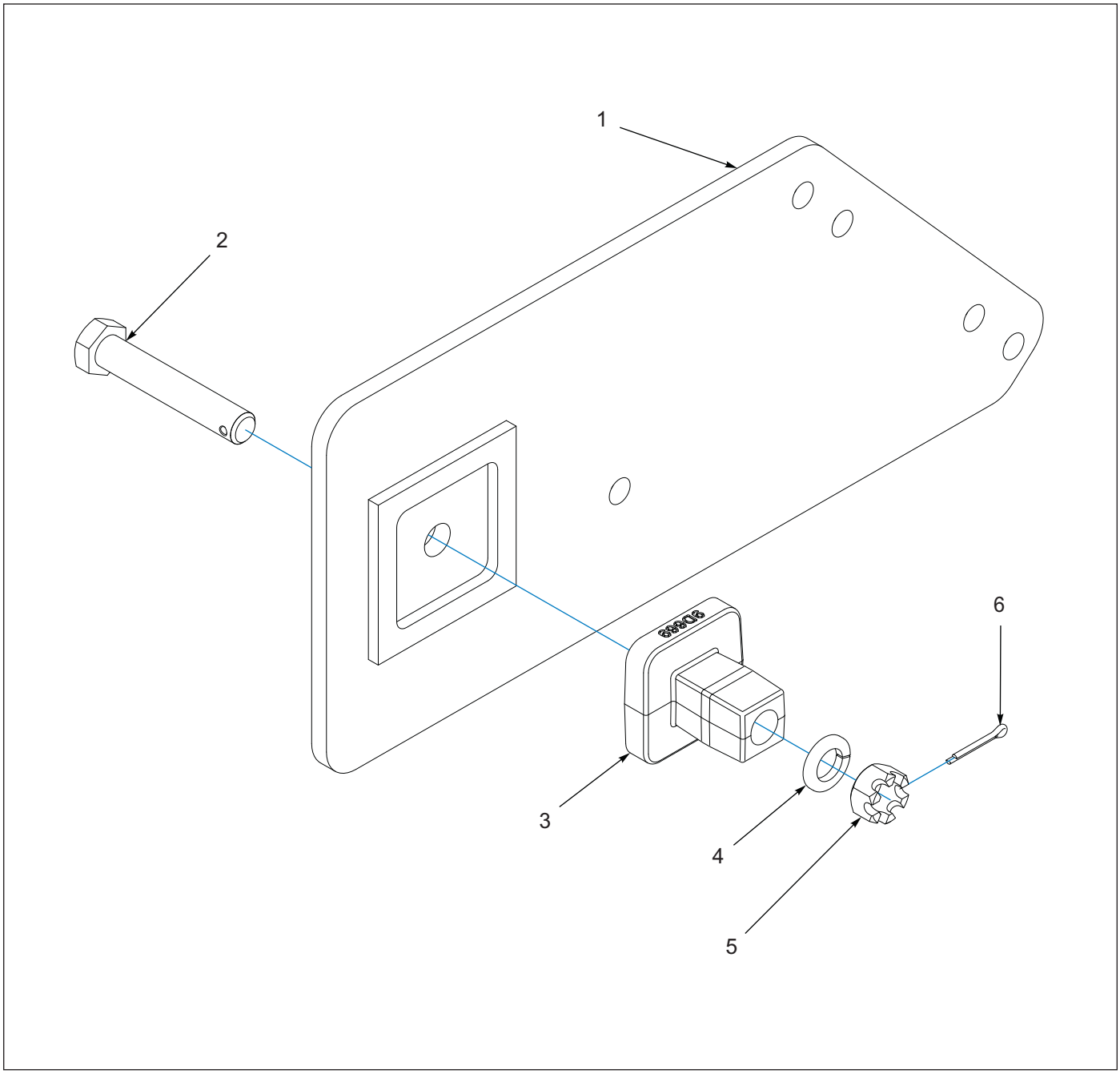

Figure 7-4: Bracket Assembly, End, Right-Hand, Notched 10-16FT

Bracket Assembly, End, Right-Hand, Notched 10-16FT

ITEM	PART NUMBER	DESCRIPTION	QTY
	8J999	R.H. END BRACKET ASM	1
1	8J997	END BRACKET R.H.	1
2	9D864	DRILLED BOLT	1
3	9D669	STRAIGHT AXLE MOUNT	1
4	1-861-010034-15	WASHER, LKG, HLCL SPR, 5/8	1
5	4D529	SLOTTED NUT 5/8-11 ZP	1
6	101386	COTTER PIN 1/8 X 1	1

Bracket Assembly, Center, Optimizer 12-20FT, Notched 18-20FT

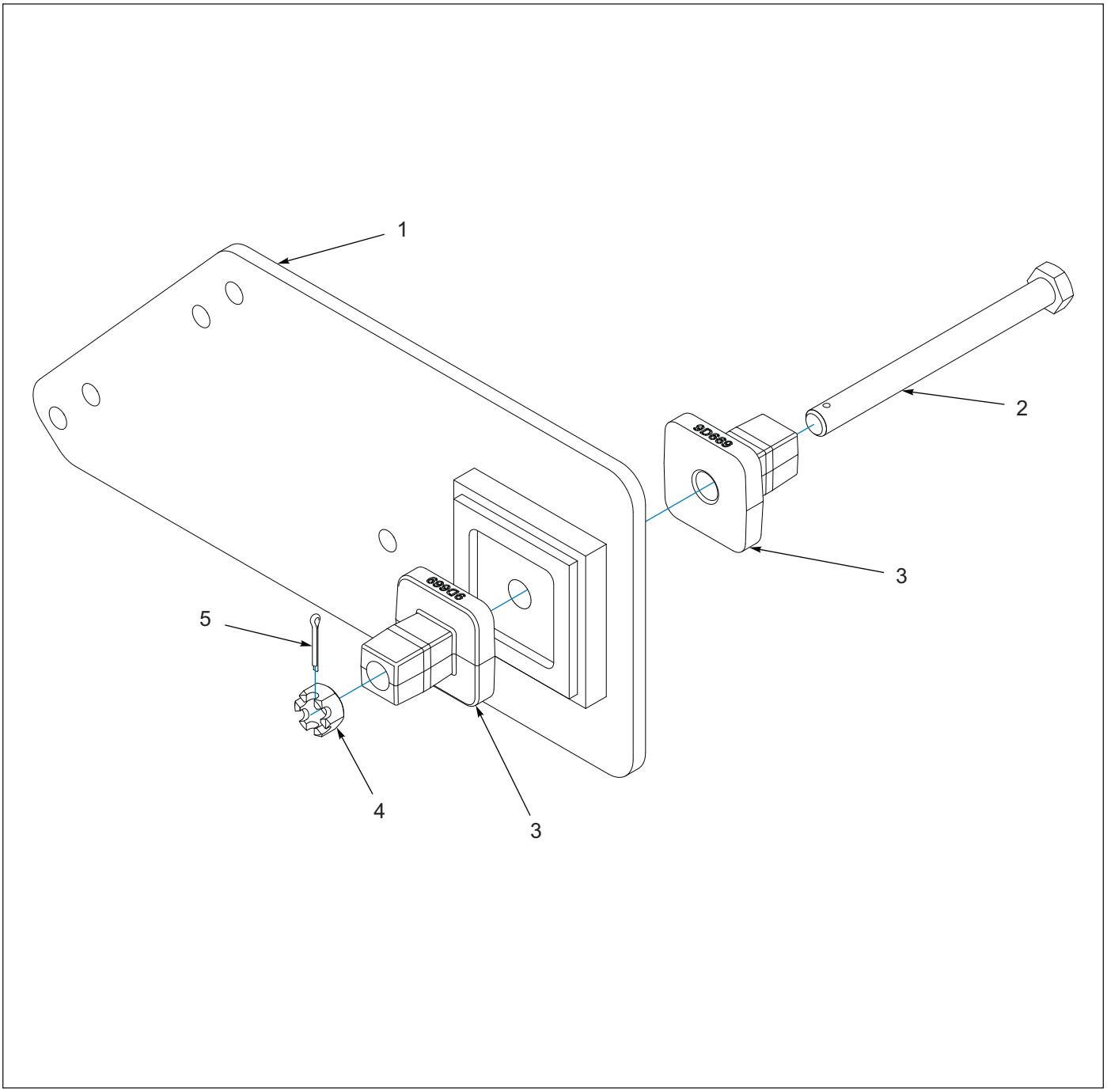

Figure 7-5: Bracket Assembly, Center, Optimizer 12-20FT, Notched 18-20FT

Bracket Assembly, Center, Optimizer 12-20FT, Notched 18-20FT

ITEM	PART NUMBER	DESCRIPTION	QTY
	9J007	CENTER BRACKET ASM	1
1	9J006	CENTER BRACKET	1
2	3J860	DRILLED BOLT **(5/8-11 X 7)**	1
3	9D669	STRAIGHT AXLE MOUNT	2
4	4D529	SLOTTED NUT 5/8-11 ZP	1
5	101386	COTTER PIN 1/8 X 1	1

Wheel and Axle Assembly, Optimizer 10FT

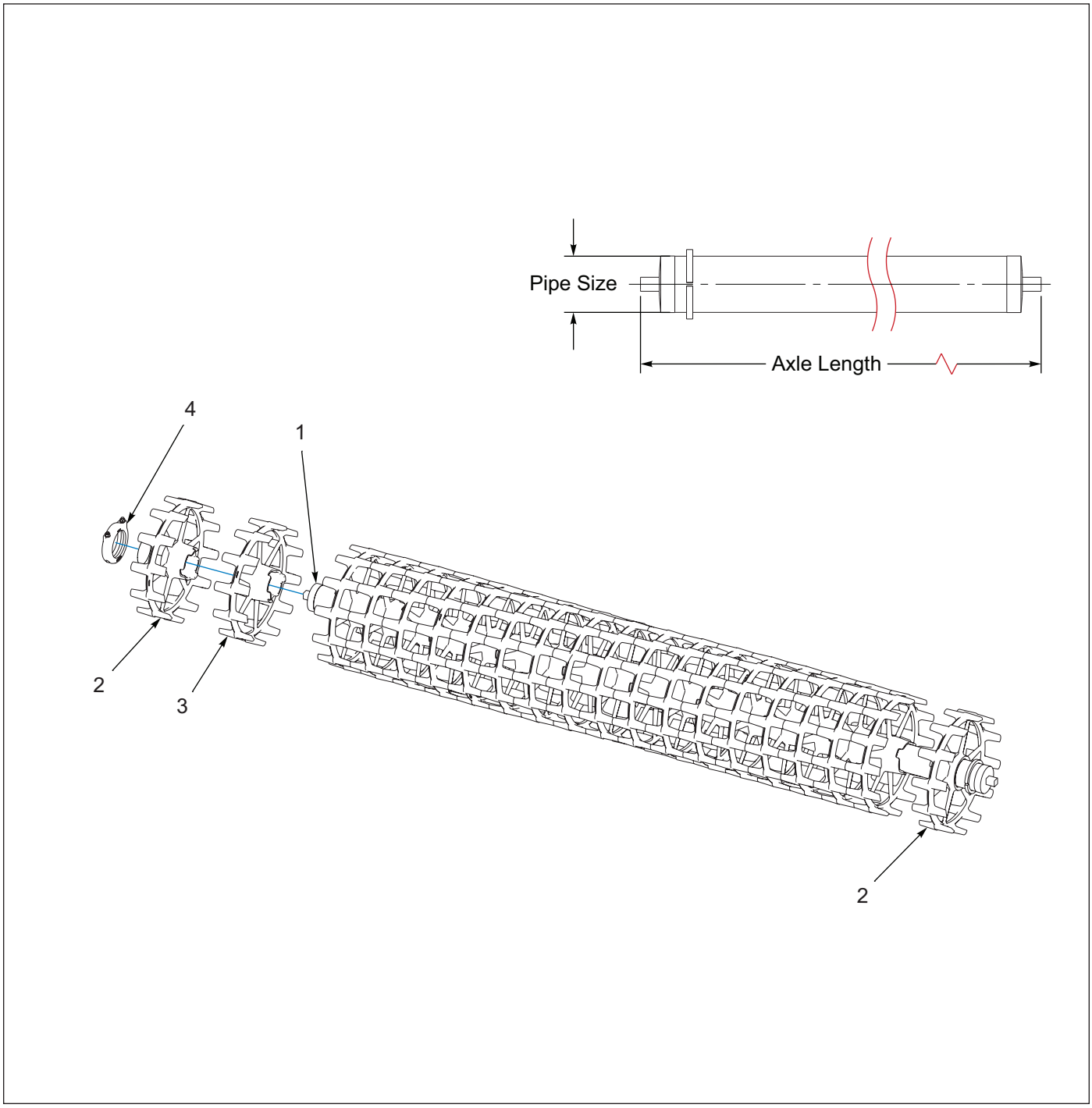

Figure 7-6: Wheel and Axle Assembly, Optimizer 10FT

Wheel and Axle Assembly, Optimizer 10FT

ITEM	PART NUMBER	DESCRIPTION	QTY
	6K481	WHEEL & AXLE ASM-POT10/XLWO120	1
1	2J374	PIPE AXLE ASM - 125-1/8" **(PIPE 4-1/2") (SEE PAGE 7-13)**	1
2	6K354	OPTIMIZER END WHEEL	2
3	6K353	OPTIMIZER WHEEL	18
4	5J376	AXLE CLAMP ASM **(SEE PAGE 7-21)**	1

Pipe Axle Assembly, w/Stub Shafts

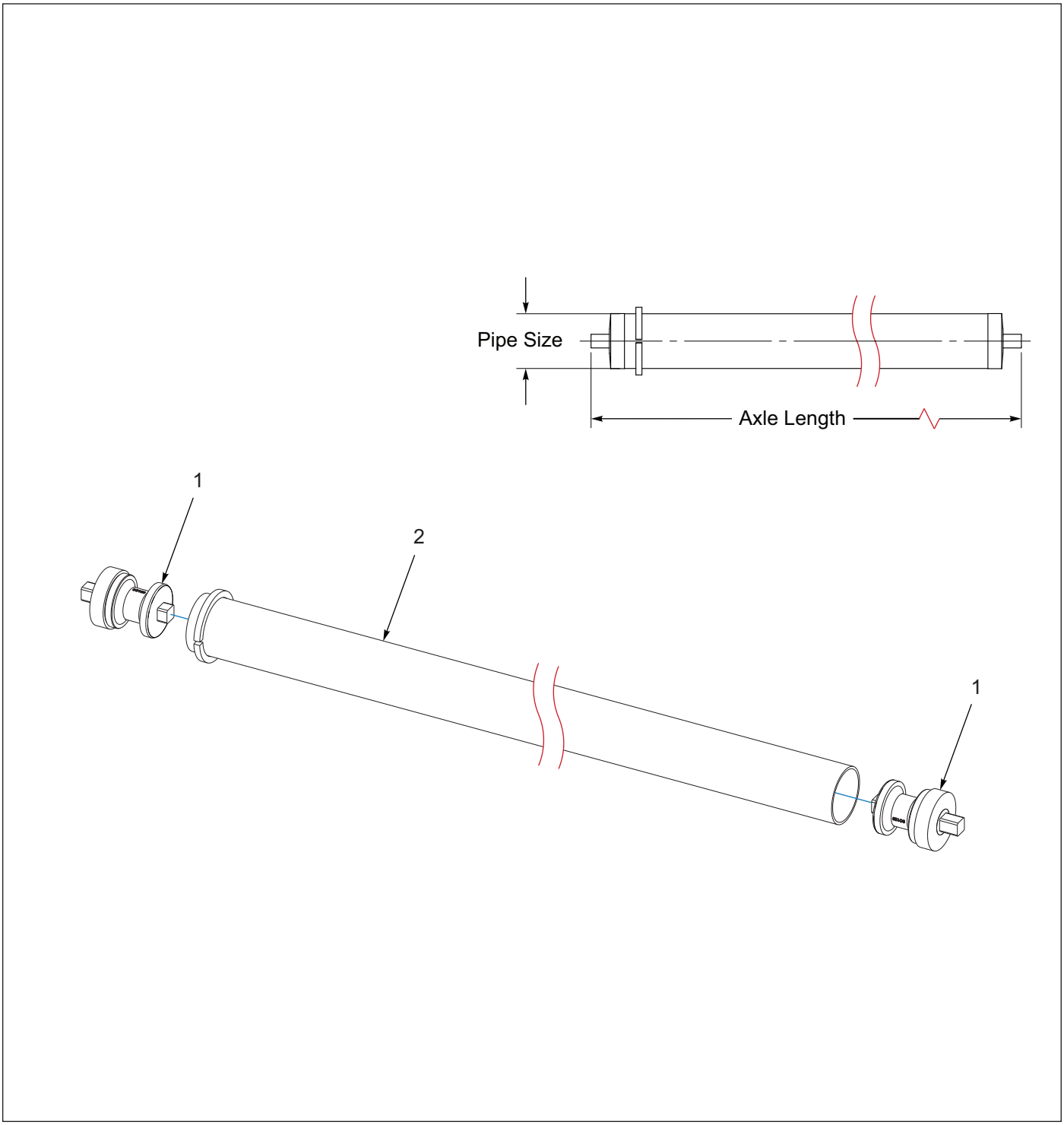

Figure 7-7: Pipe Axle Assembly, w/Stub Shafts

Pipe Axle Assembly, w/Stub Shafts

ITEM	PART NUMBER	DESCRIPTION	QTY
	2J374	PIPE AXLE ASM - 125-1/8"	1
1	9C129	STUB SHAFT MOUNTING	2
2	- - - - -	AXLE PIPE **(NOT SOLD SEPARATELY)**	1

Wheel and Axle Assemblies, Notched 10-16FT

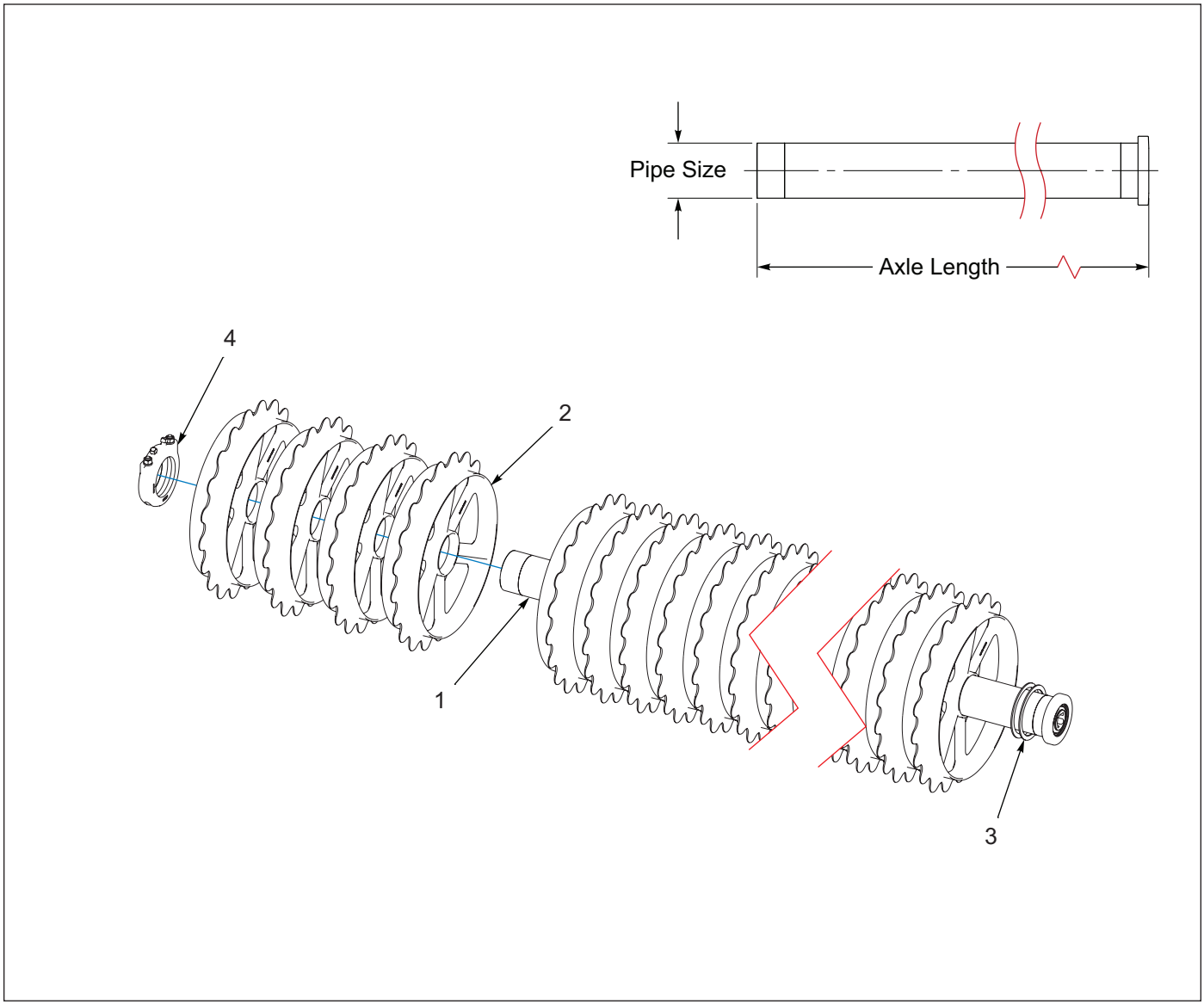

Figure 7-8: Wheel and Axle Assemblies, Notched 10-16FT

Wheel and Axle Assemblies, Notched 10-16FT

ITEM	PART NUMBER	DESCRIPTION	QTY			
		MODELS	PPD10	PPD12	PPD14	PPD16
	9J028	WHEEL & AXLE ASM **(PIPE 4" X 60-5/16)**	1	- -	- -	- -
	8J069	WHEEL & AXLE ASM **(PIPE 4" X 72-5/16)**	- -	1	- -	- -
	8J068	WHEEL & AXLE ASM **(PIPE 4" X 84-5/16)**	- -	- -	1	- -
	9J027	WHEEL & AXLE ASM **(PIPE 4" X 96-5/16)**	- -	- -	- -	1
1	9C062	PIPE AXLE ASM - 60-5/16" **(SEE PAGE 7-16)**	1	- -	- -	- -
1	8C986	PIPE AXLE ASM - 72-5/16" **(SEE PAGE 7-16)**	- -	1	- -	- -
1	1D138	PIPE AXLE ASM - 84-5/16" **(SEE PAGE 7-16)**	- -	- -	1	- -
1	3D199	PIPE AXLE ASM - 96-5/16" **(SEE PAGE 7-16)**	- -	- -	- -	1
2	8J001	20" NOTCHED DUCTILE	15	18	21	24
3	9J277	SPACER RING	2	2	2	2
4	5J375	AXLE CLAMP ASM **(SEE PAGE 7-15)**	1	1	1	1

Axle Clamp Assembly, 4" Pipe

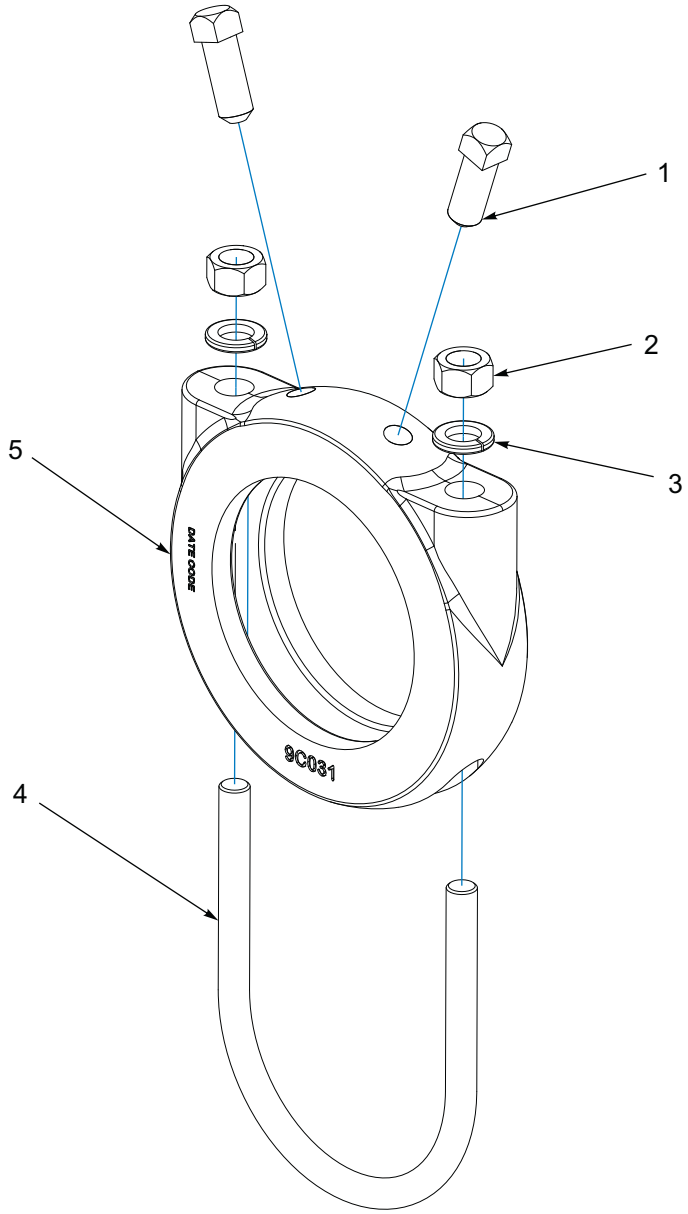

Figure 7-9: Axle Clamp Assembly, 4" Pipe

Axle Clamp Assembly, 4" Pipe

ITEM	PART NUMBER	DESCRIPTION	QTY
	5J375	AXLE CLAMP ASM	1
1	1-654-010080-2	SCREW SET 1/2 X 1-1/4 SQHD CP PT	2
2	1-512-010007-09	NUT, HEX 1/2-13, ZP	2
3	1-861-010034-13	WASHER, LKG HLCL SPR, 1/2	2
4	9D673	U-BOLT 1/2-13 X 3-1/4 X 4-9/16	1
5	9C031	AXLE CLAMP	1

Pipe Axle Assemblies w/Inner and Outer Bearings, 4" Pipe

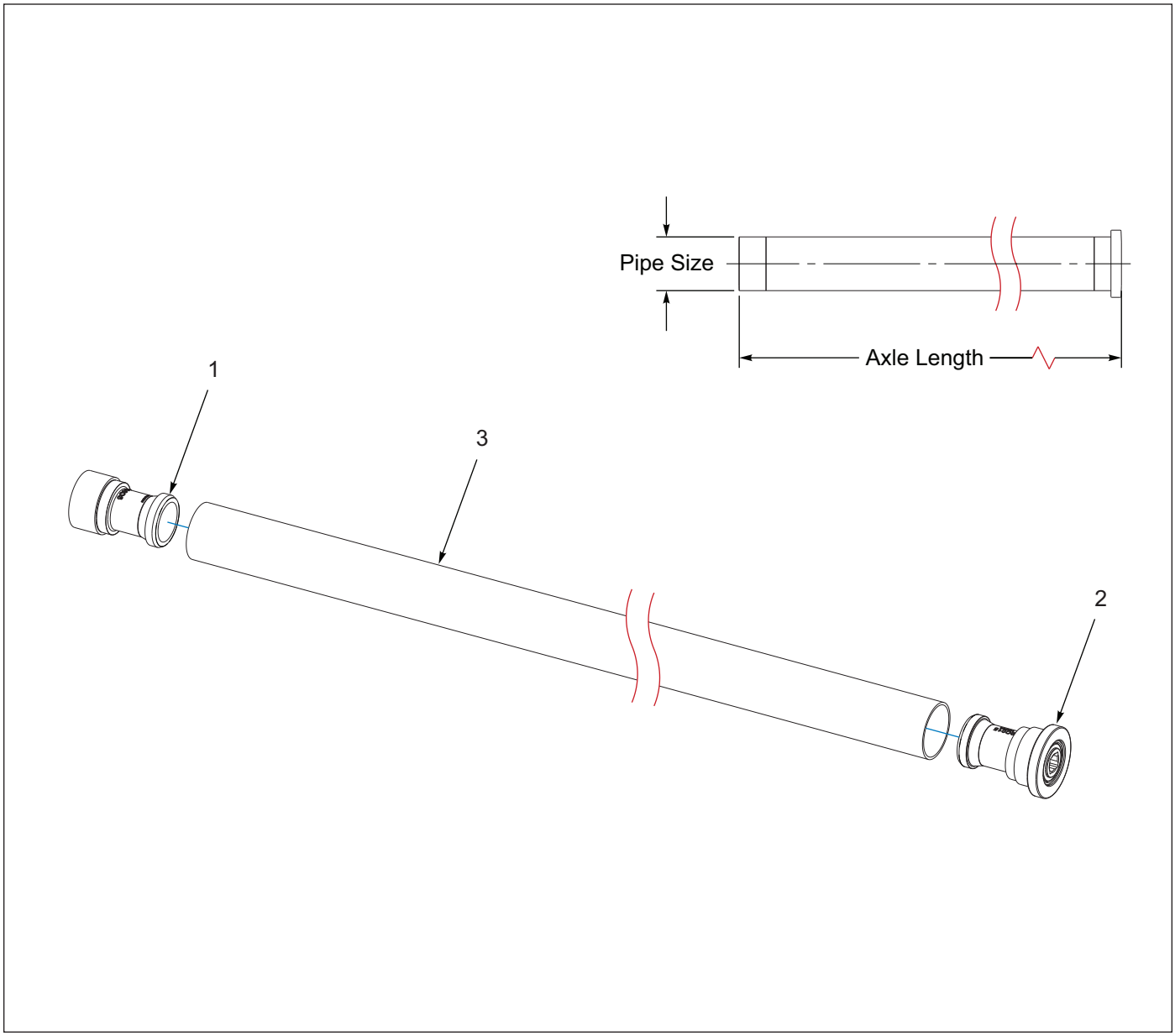

Figure 7-10: Pipe Axle Assemblies w/Inner and Outer Bearings, 4" Pipe

Pipe Axle Assemblies w/Inner and Outer Bearings, 4" Pipe

ITEM	PART NUMBER	DESCRIPTION	QTY			
		MODELS	PP10	PP12	PP14	PP16
	9C062	PIPE AXLE ASM - 60-5/16"	1	- -	- -	- -
	8C986	PIPE AXLE ASM - 72-5/16"	- -	1	- -	- -
	1D138	PIPE AXLE ASM - 84-5/16"	- -	- -	1	- -
	3D199	PIPE AXLE ASM - 96-5/16"	- -	- -	- -	1
1	9C182	OUTER BEARING HOUSING ASM. **(SEE PAGE 7-17)**	1	1	1	1
2	9C183	INNER BEARING HOUSING ASM. **(SEE PAGE 7-18)**	1	1	1	1
3	- - - - -	AXLE PIPE **(NOT SOLD SEPARATELY)**	1	1	1	1

Bearing Housing Assembly, Outer, 4" Pipe

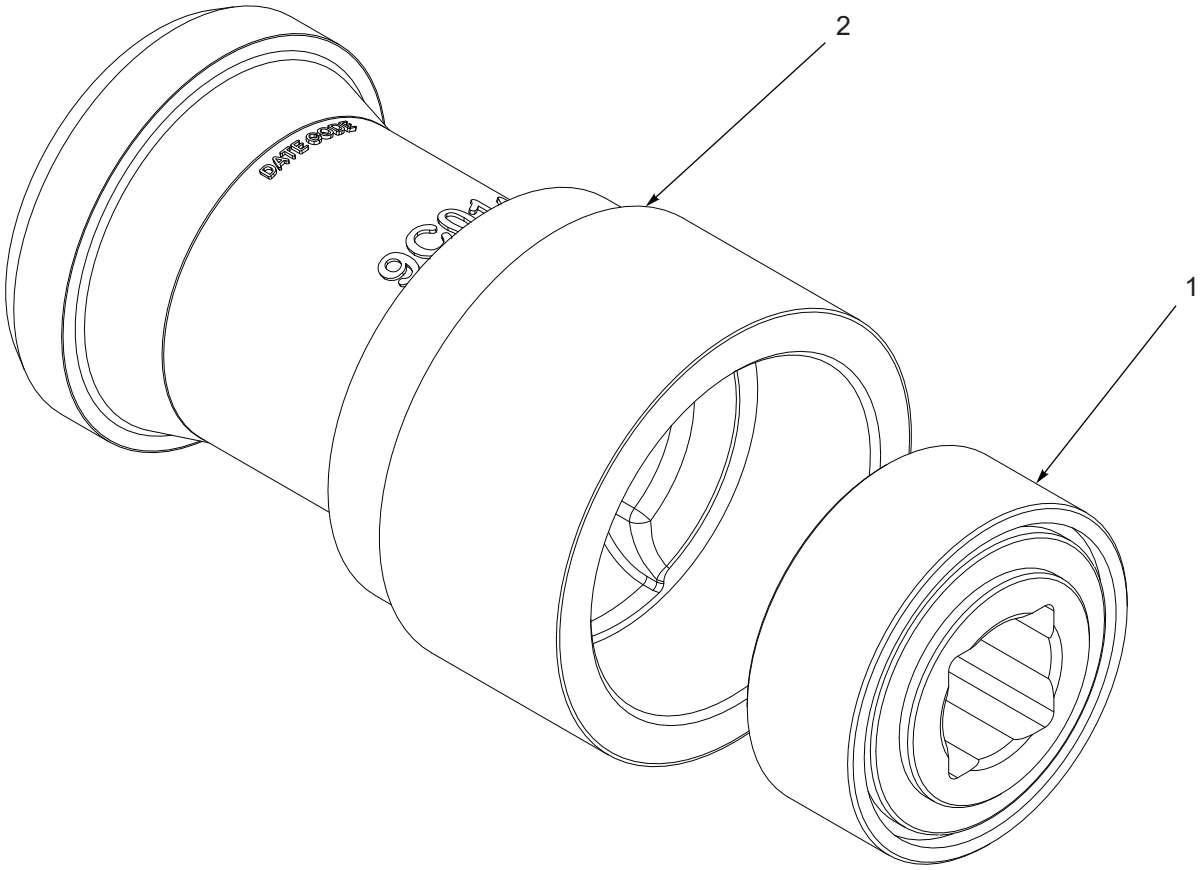

Figure 7-11: Bearing Housing Assembly, Outer, 4" Pipe

Bearing Housing Assembly, Outer, 4" Pipe

ITEM	PART NUMBER	DESCRIPTION	QTY
	9C182	OUTER BEARING HOUSING ASM	1
1	9C016	BEARING	1
2	9C014	OUTER BEARING HOUSING	1

Bearing Housing Assembly, Inner, 4" Pipe

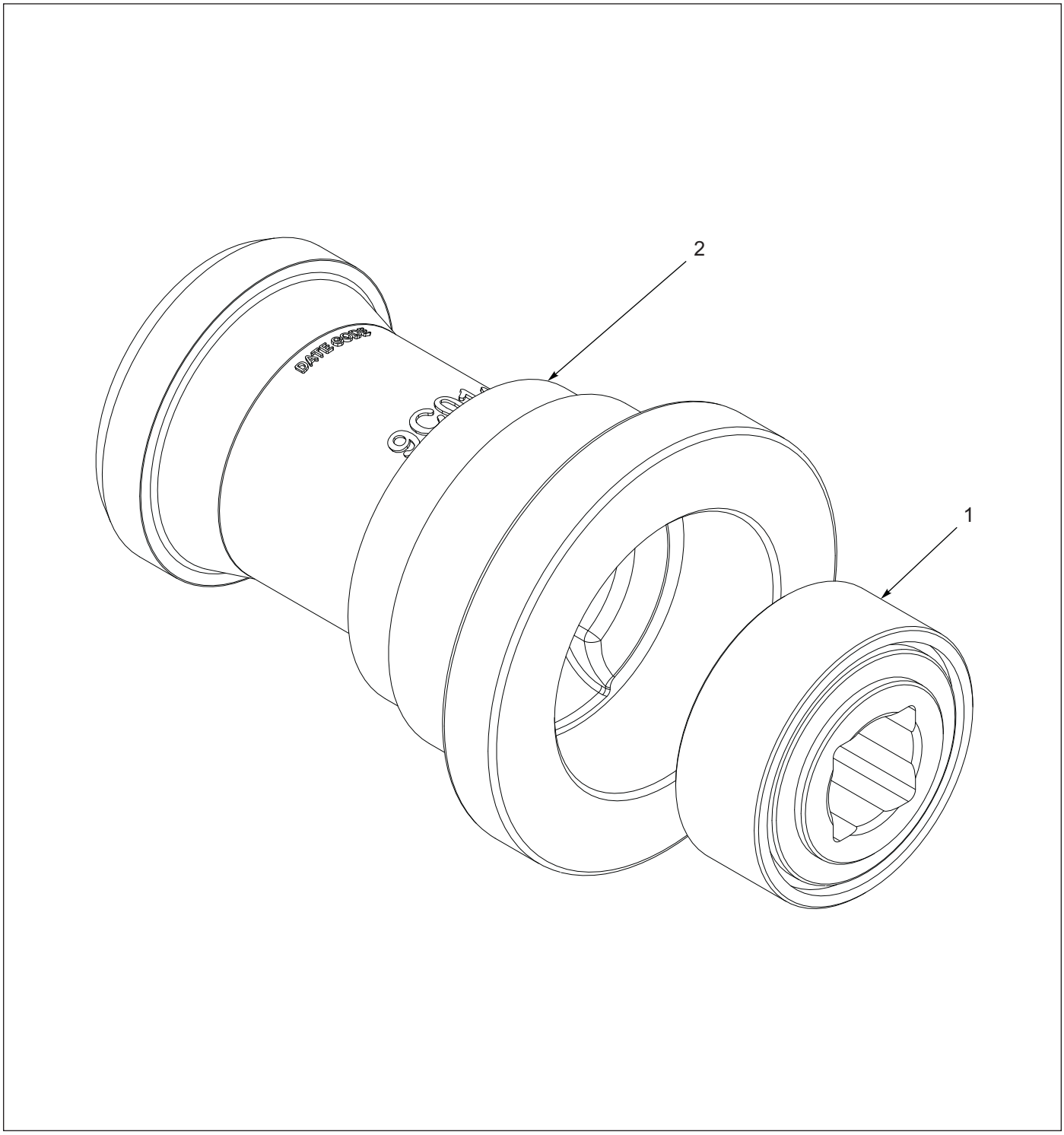

Figure 7-12: Bearing Housing Assembly, Inner, 4" Pipe

Bearing Housing Assembly, Inner, 4" Pipe

ITEM	PART NUMBER	DESCRIPTION	QTY
	9C183	INNER BEARING HOUSING ASM	1
1	9C016	BEARING	1
2	9C015	INNER BEARING HOUSING	1

Wheel and Axle Assemblies, Optimizer 12-20FT

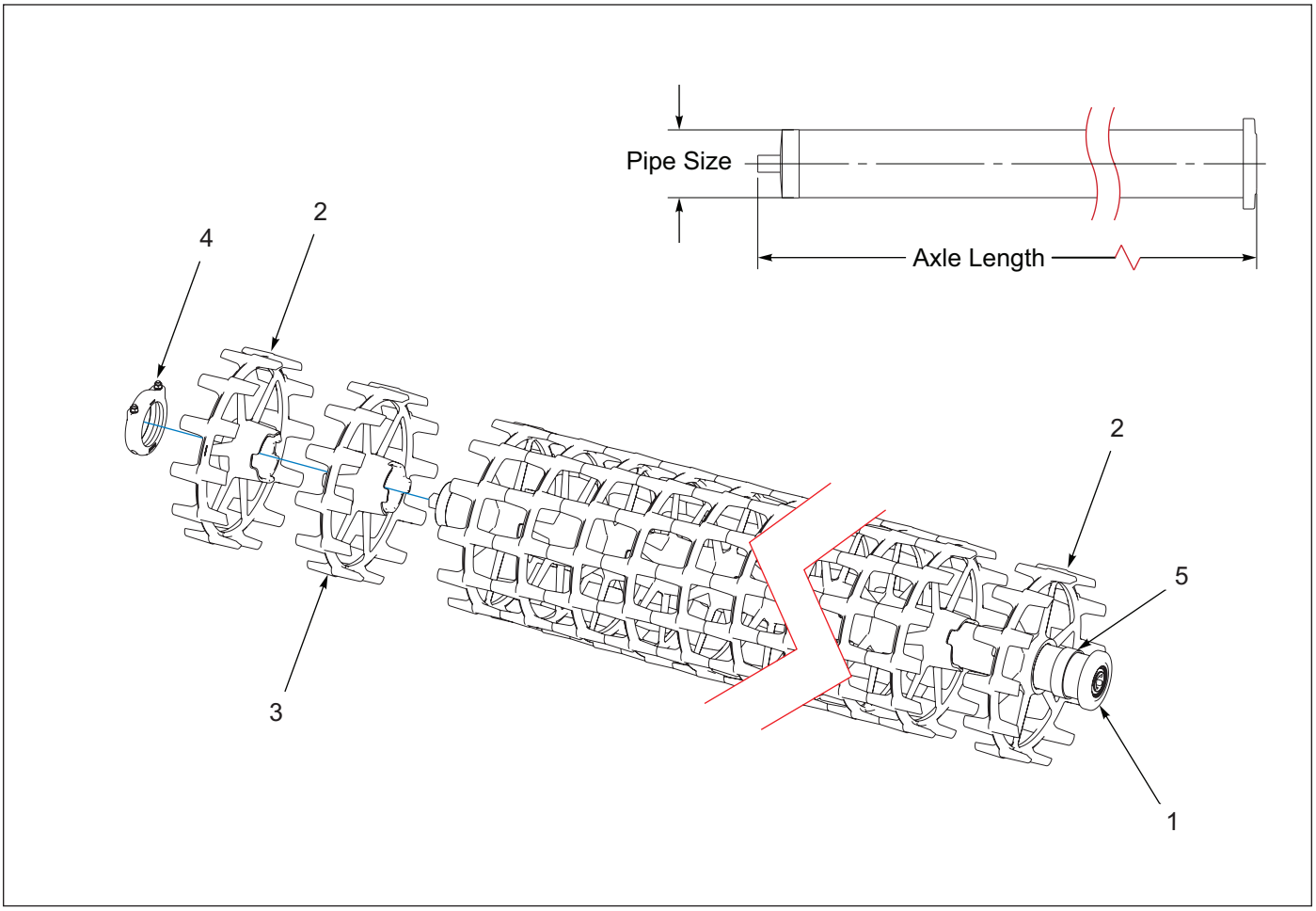

Figure 7-13: Wheel and Axle Assemblies, Optimizer 12-20FT

Wheel and Axle Assemblies, Optimizer 12-20FT

ITEM	PART NUMBER	DESCRIPTION	QTY				
		MODELS	PPO12	PPO14	PPO16	PPO18	PPO20
	6K485	WHEEL & AXLE ASM - POT12	1	- -	- -	- -	- -
	6K488	WHEEL & AXLE ASM - POT14	- -	1	- -	- -	- -
	6K490	WHEEL & AXLE ASM - POT16	- -	- -	1	- -	- -
	6K492	WHEEL & AXLE ASM - POT18	- -	- -	- -	1	- -
	6K494	WHEEL & AXLE ASM - POT20	- -	- -	- -	- -	1
1	5J760	PIPE AXLE ASM - 75 1/4" **(SEE PAGE 7-22)**	2	- -	- -	- -	- -
1	3J187	PIPE AXLE ASM - 87 1/4" **(SEE PAGE 7-22)**	- -	2	- -	- -	- -
1	5D178	PIPE AXLE ASM - 99 1/8" **(SEE PAGE 7-22)**	- -	- -	2	- -	- -
1	3J186	SHAFT ASM - 9 FT **(SEE PAGE 7-22)**	- -	- -	- -	2	- -
1	3J185	SHAFT ASM - 10 FT **(SEE PAGE 7-22)**	- -	- -	- -	- -	2
2	6K354	OPTIMIZER END WHEEL	4	4	4	4	4
3	6K353	OPTIMIZER WHEEL	20	24	28	32	36
4	5J376	AXLE CLAMP ASM **(SEE PAGE 7-21)**	2	2	2	2	2
5	6K484	SPACER	2	2	2	2	2

Wheel and Axle Assemblies, Notched 18-20FT

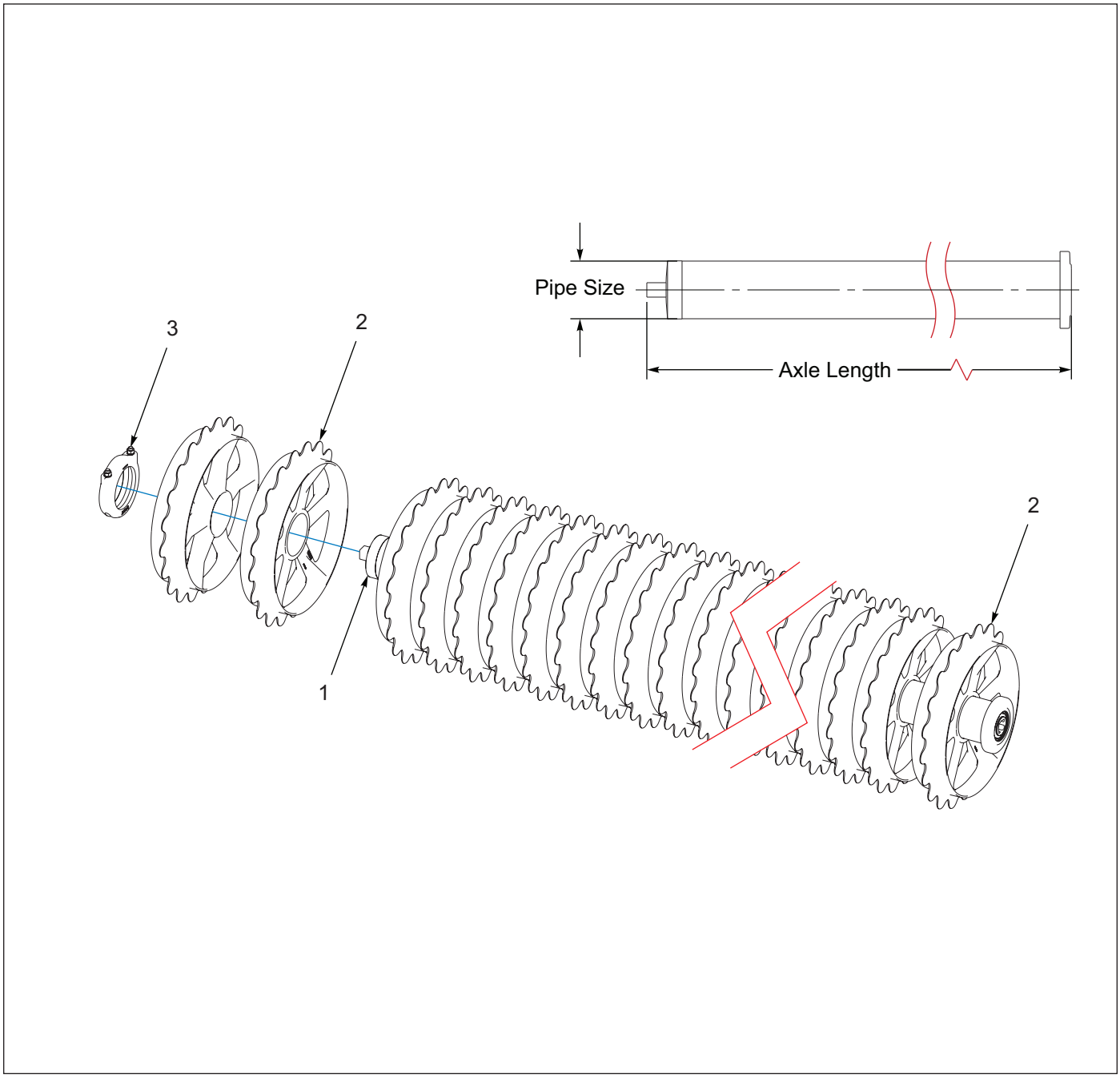

Figure 7-14: Wheel and Axle Assemblies, Notched 18-20FT

Wheel and Axle Assemblies, Notched 18-20FT

ITEM	PART NUMBER	DESCRIPTION	QTY	
		MODELS	PPD18	PPD20
	3K323	WHEEL & AXLE ASM	1	- -
	5K744	WHEEL & AXLE ASM	- -	1
1	3J186	SHAFT ASM - 9 FT **(PIPE 4-1/2" X 111-1/4) (SEE PAGE 7-22)**	1	- -
1	3J185	SHAFT ASM - 10 FT **(PIPE 4-1/2" X 123-1/4) (SEE PAGE 7-22)**	- -	1
2	9J808	20" DUCTILE WHEEL	27	30
3	5J376	AXLE CLAMP ASM **(SEE PAGE 7-21)**	1	1

Axle Clamp Assembly, 4-1/2" Pipe

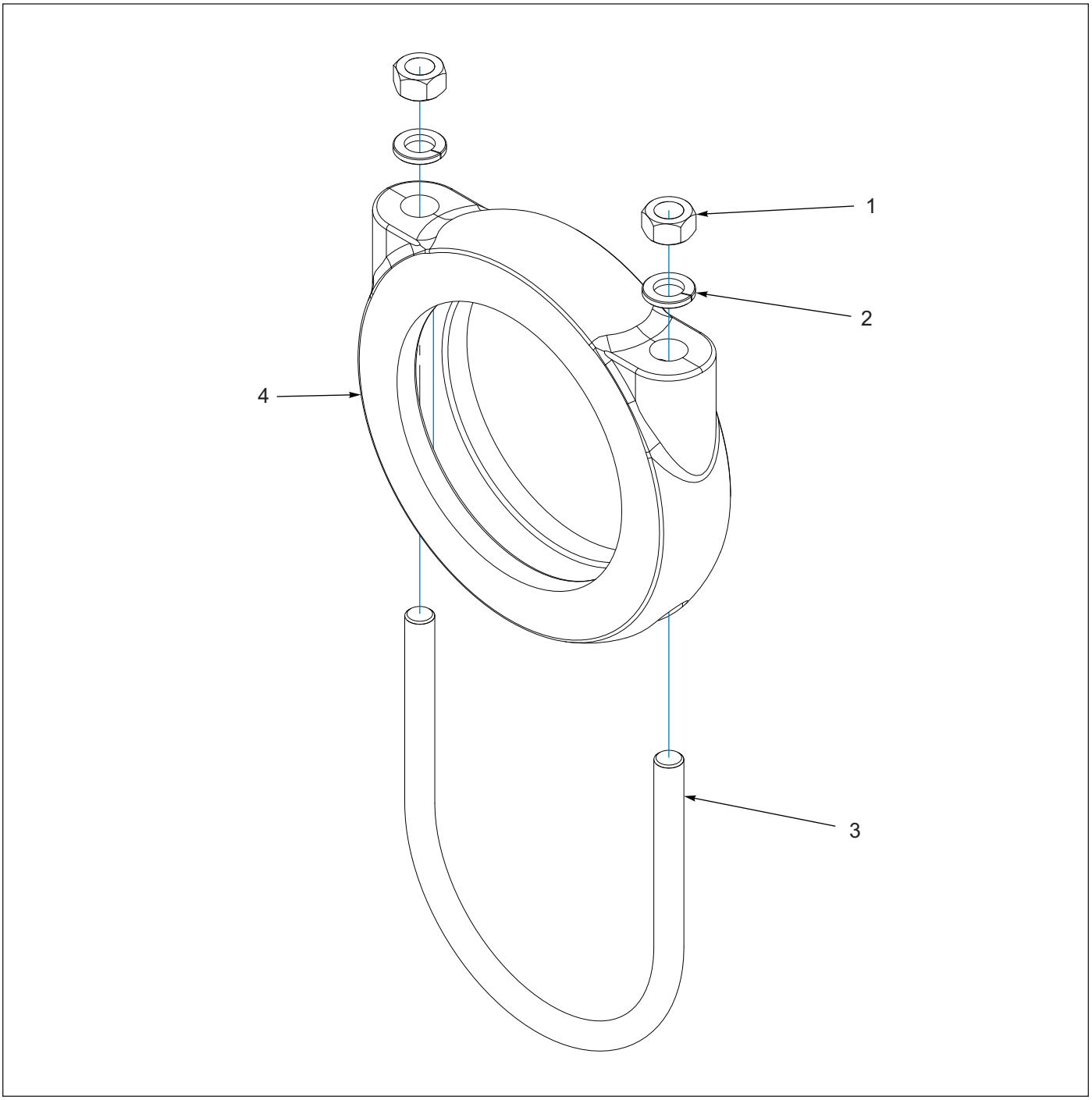

Figure 7-15: Axle Clamp Assembly, 4-1/2" Pipe

Axle Clamp Assembly, 4-1/2" Pipe

ITEM	PART NUMBER	DESCRIPTION	QTY
	5J376	AXLE CLAMP ASM	1
1	1-512-010007-08	NUT, HEX 7/16-14 GR2, ZP	2
2	1-861-010034-12	WASHER LOCKING HLC SPG 7/16	2
3	1C290	U-BOLT .386 DIA X 14-1/2L	1
4	0A087	AXLE CLAMP, 4-5/8" ID	1

Pipe Axle Assemblies w/Stub Shaft and Inner Bearing, 4-1/2" Pipe

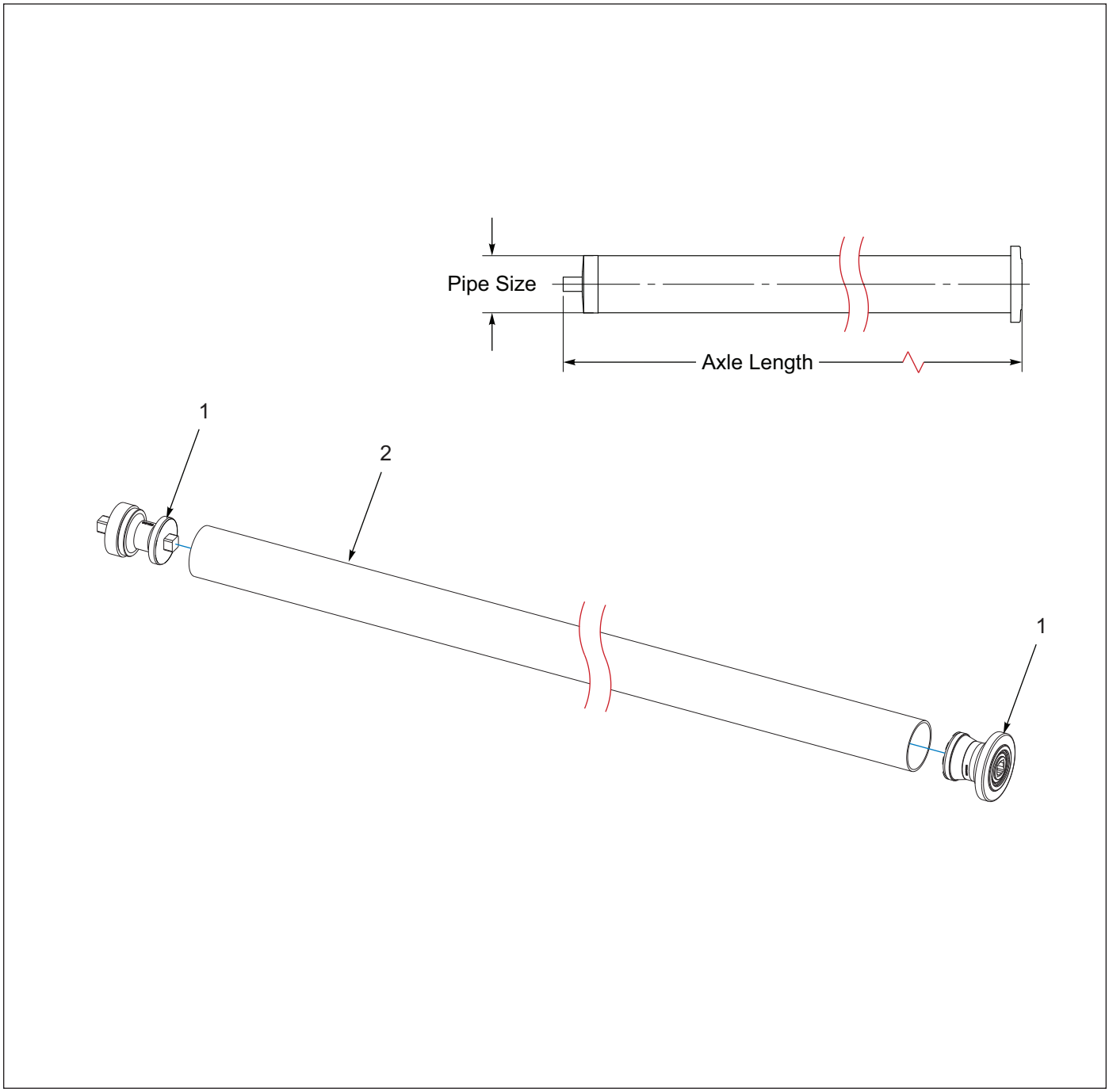

Figure 7-16: Pipe Axle Assemblies w/Stub Shaft and Inner Bearing, 4-1/2" Pipe

Pipe Axle Assemblies w/Stub Shaft and Inner Bearing, 4-1/2" Pipe

ITEM	PART NUMBER	DESCRIPTION	QTY	
		MODELS	PP18	PP20
	3J186	SHAFT ASM - 9 FT **(PIPE 4-1/2 X 111-1/4)**	1	- -
	3J185	SHAFT ASM - 10 FT **(PIPE 4-1/2 X 123-1/4)**	- -	1
1	9C129	STUB SHAFT MOUNTING	1	1
2	5D202	INNER BRG. HOUSING ASSEMBLY **(SEE PAGE 7-23)**	1	1
3	- - - - -	AXLE PIPE **(NOT SOLD SEPARATELY)**	1	1

Bearing Housing Assembly, Inner, 4-1/2" Pipe

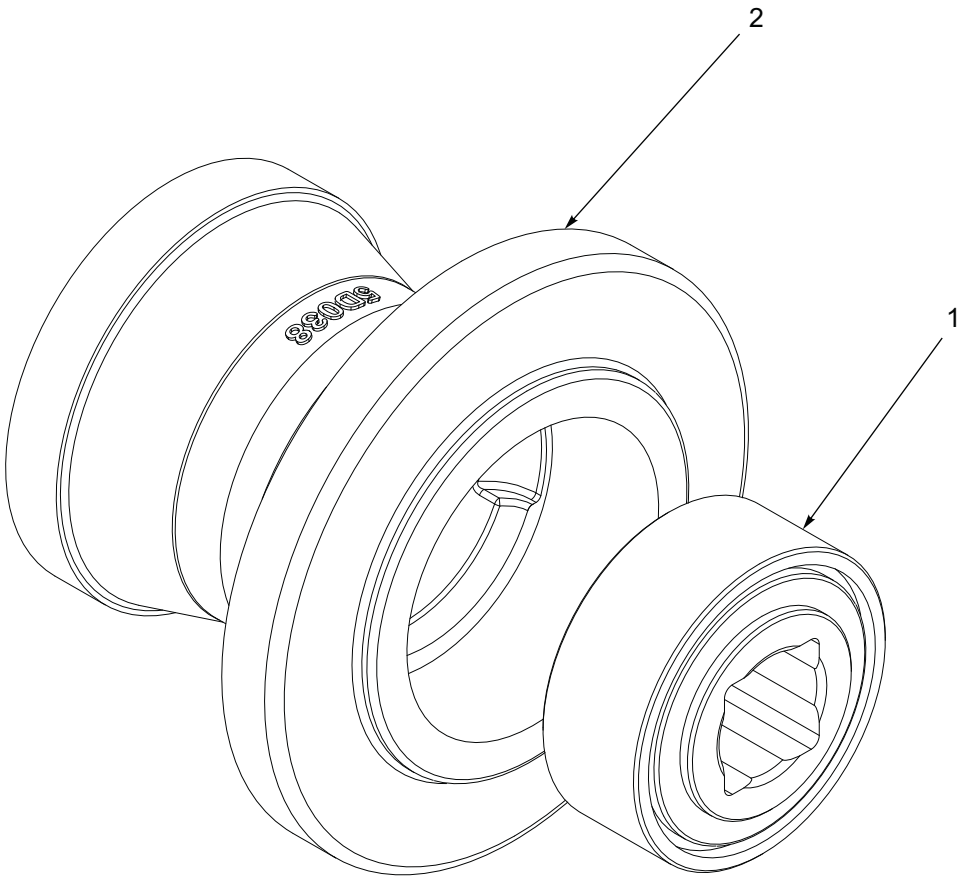

Figure 7-17: Bearing Housing Assembly, Inner, 4-1/2" Pipe

Bearing Housing Assembly, Inner, 4-1/2" Pipe

ITEM	PART NUMBER	DESCRIPTION	QTY
	5D202	INNER BRG. HOUSING ASSEMBLY	1
1	9C016	BEARING **(1-3/16 SQ BORE)**	1
2	5D038	INNER BRG. HOUSING	1

Table provided for general use.

NOTES:

LED Warning Lamp Installation (After 08/2013)

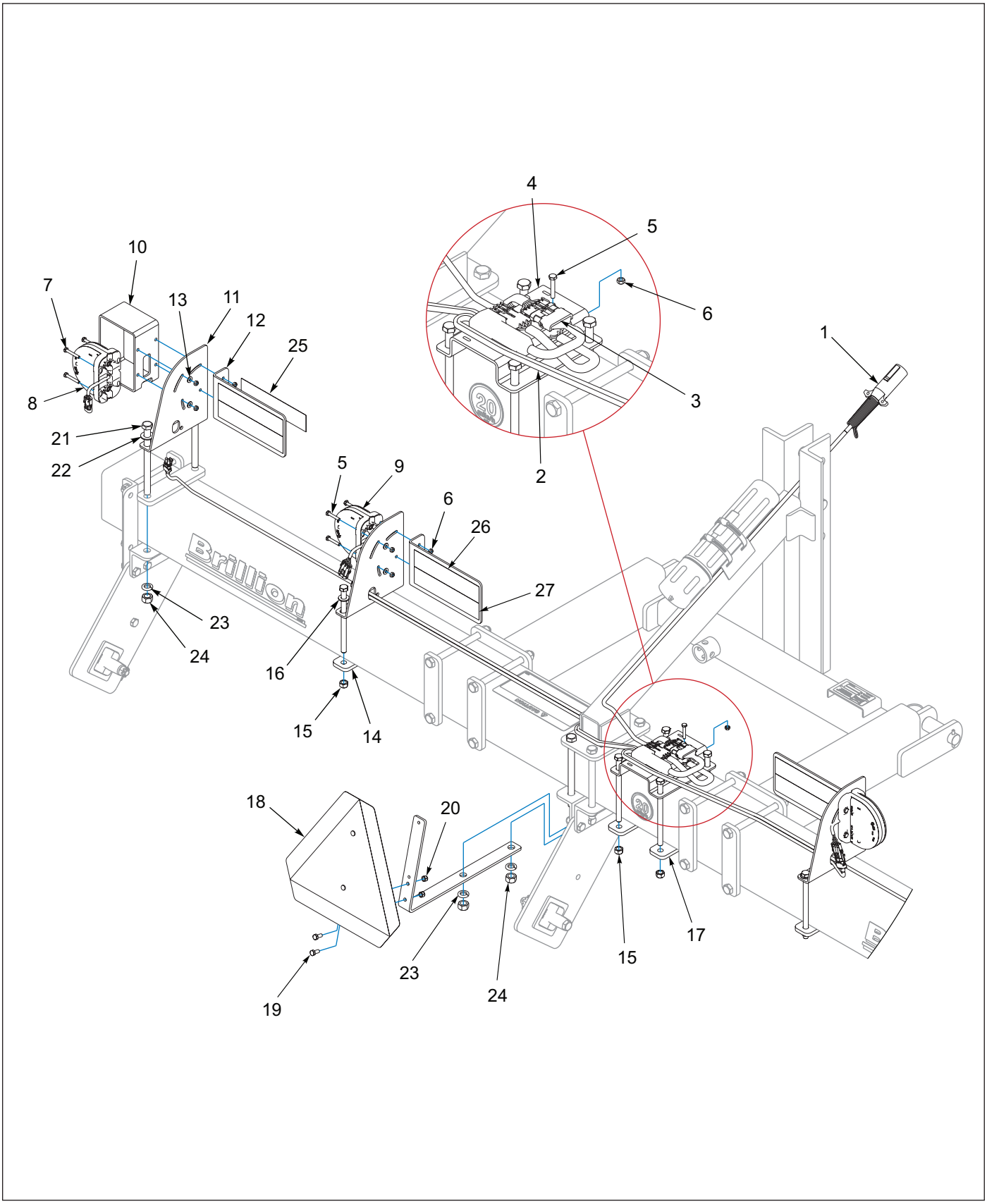

Figure 7-18: LED Warning Lamp Installation (After 08/2013)

LED Warning Lamp Installation (After 08/2013)

ITEM	PART NUMBER	DESCRIPTION	QTY
1	178514	HARNESS,7 PIN/4PIN WP, 10'	1
2	178513	HARNESS, LAMP 66 X 138	1
3	174437	MODULE, AG FLASHER CONTROL	1
4	178530	BRACKET, MODULE MNT, 6IN	1
5	1-654-010047-08	SCREW HX CP,1/4-20UNCX1-1/2G5	10
6	1-512-010005-01	NUT,HEX,SLFLKG GRB 1/4-20	18
7	1-654-010047-09	SCREW,HX CP,1/4-20UNCX1-3/4G5	8
8	174436	LAMP, AG AMBER SINGLE LED	2
9	174435	LAMP, AG RED SINGLE LED	2
10	178534	TUBE, LIGHT SHIELD, 5 X 7	2
11	164698	BRACKET LIGHT MOUNT	4
12	164697	PLATE CONSPICUITY DECAL MOUNT	4
13	1-861-010032-06	WASHER, FLAT 1/4 N ZP/CD	8
14	1-654-010055-20	SCREW,HXCP,1/2-13UNCX7-1/2GR5	8
15	1-512-010005-09	NUT,HEX,SLFLKG, 1/2-13 GRB	8
16	1-861-010032-14	WASHER, FLAT 1/2" N ZP/CD	4
17	3K320	STRAP	4
18	2P151	SMV W/BRACKET	1
19	1-654-010049-03	SCREW HX CP 5/16-18UNCX3/4GR5	2
20	104032	NUT,HX SLF-LKG W/MYL 5/16-18	2
21	1-654-010059-21	SCREW,HEX CAP,5/8-11UNCX8 GR5	8
22	1-861-010032-18	WASHER, FLAT 5/8 N ZP/CD	4
23	1-861-010034-15	WASHER,LKG,HLCL SPR,5/8	8
24	1-512-010007-11	NUT, HEX 5/8-11 GR2 ZP	8
25	528934	REFLECTOR - YELLOW	2
26	528938	STRIPE, ORANGE	4
27	528933	REFLECTOR - RED	4
28	3J615	CABLE TIE 28" **(NOT SHOWN)**	12
29	105-0228	TYWRAP 8IN LG TY-5272MX **(NOT SHOWN)**	12

Warning Lamp Installation (Before 08/2013)

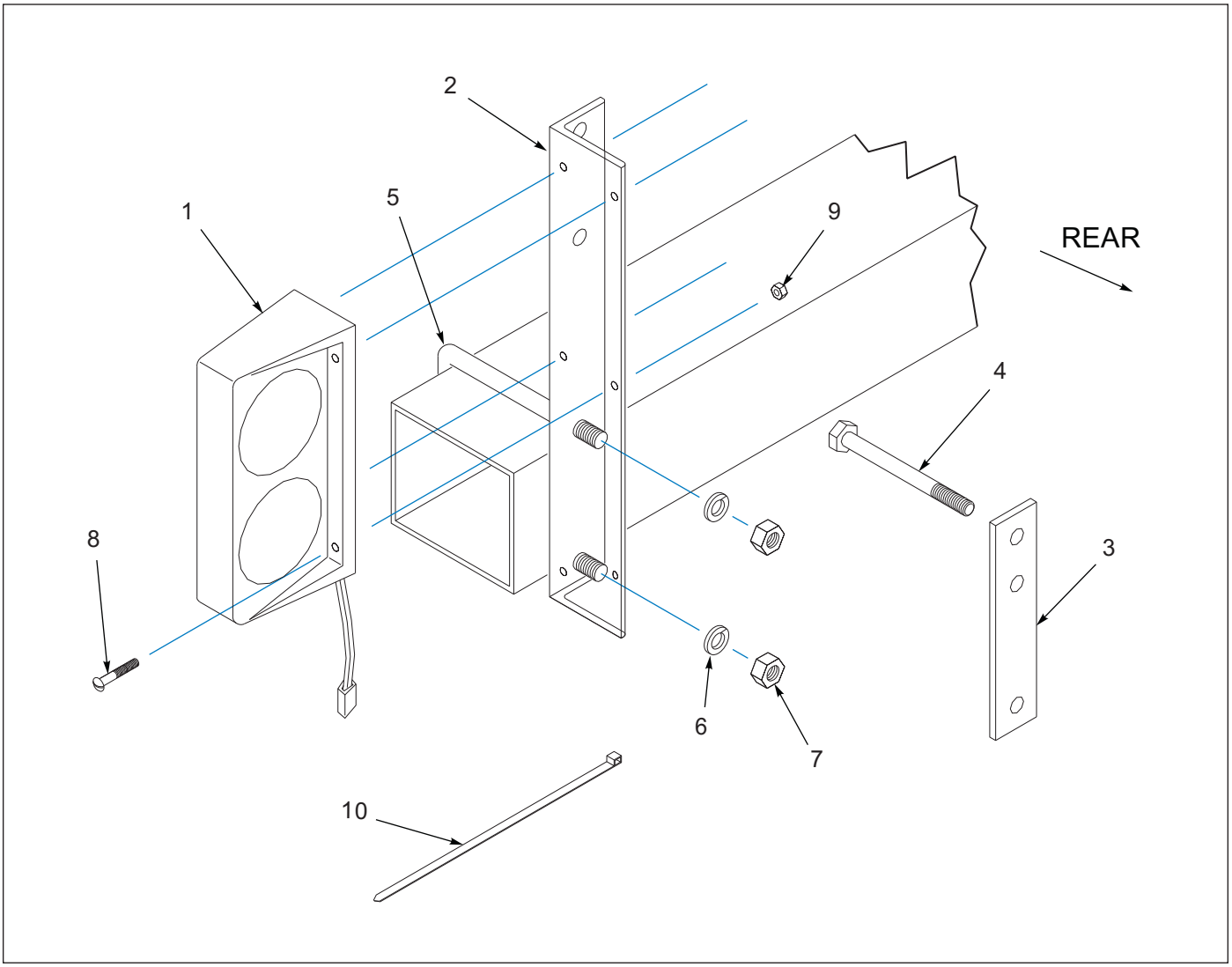

Figure 7-19: Warning Lamp Installation (Before 08/2013)

Warning Lamp Installation (Before 08/2013)

ITEM	PART NUMBER	DESCRIPTION	QTY
	4K910	LIGHT KIT PT 18-20/P10-20	1
1	142758	AG LAMP, DUAL LH	1
1	142759	AG LAMP, DUAL RH	1
2	4K908	ANGLE	2
3	4K854	STRAP	2
4	5C124	BOLT	4
5	3J561	U-BOLT 1/2-13 X 7-1/2 X 4-1/2	2
6	1-861-010034-13	WASHER, LKG HLCL SPR, 1/2	4
7	1-512-010007-09	NUT, HEX 1/2-13 GR2 ZP	4
8	4K782	1-654-010003	8
9	108417	NUT SPIRAL 1/4-20HX FG	8
10	3J615	CABLE TIE 28"	10
11	4K780	10' WISHBONE AG HARNESS (2510)	1
12	4K781	AG HARNESS - 20' (002420) **(NOT SHOWN)**	1

Table provided for general use.

NOTES:

Scrapers, Notched Roller - Optional

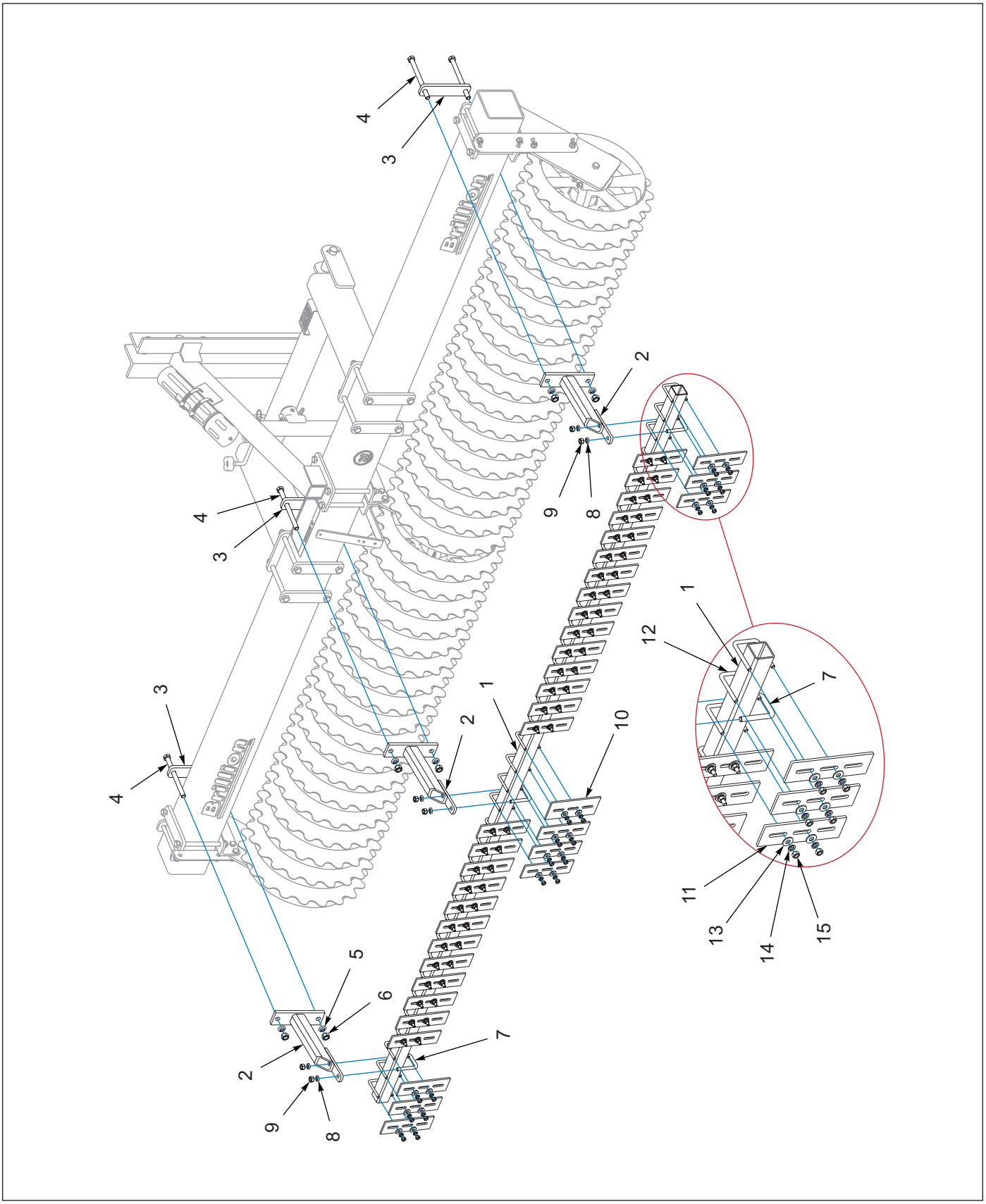

Figure 7-20: Scrapers, Notched Roller - Optional

Scrapers, Notched Roller - Optional

ITEM	PART NUMBER	DESCRIPTION	QTY					
		MODEL NUMBER	10	12	14	16	18	20
	5K753	PPD10 SCRAPER KIT	1	- -	- -	- -	- -	- -
	5K754	PPD12 SCRAPER KIT	- -	1	- -	- -	- -	- -
	5K755	PPD14 SCRAPER KIT	- -	- -	1	- -	- -	- -
	5K756	PPD16 SCRAPER KIT	- -	- -	- -	1	- -	- -
	5K757	PPD18 SCRAPER KIT	- -	- -	- -	- -	1	- -
	5K758	PPD20 SCRAPER KIT	- -	- -	- -	- -	- -	1
1	9J056	SCRAPER TUBE - 124"	1	- -	- -	- -	- -	- -
1	9J057	SCRAPER TUBE - 148"	- -	1	- -	- -	- -	- -
1	9J058	SCRAPER TUBE - 172"	- -	- -	1	- -	- -	- -
1	9J059	SCRAPER TUBE - 196"	- -	- -	- -	1	- -	- -
1	3K699	SCRAPER TUBE - 220"	- -	- -	- -	- -	1	- -
1	4K653	SCRAPER TUBE - 244"	- -	- -	- -	- -	- -	1
2	5K752	SCRAPER BRACKET WLDMT	3	3	3	3	4	4
3	3K321	STRAP	3	3	3	3	4	4
4	1-654-010059-21	SCREW,HEX CAP,5/8-11UNCX8 GR5	6	6	6	6	8	8
5	1-861-010034-15	WASHER,LKG,HLCL SPR,5/8	6	6	6	6	8	8
6	1-512-010007-11	NUT, HEX 5/8-11 GR2 ZP	6	6	6	6	8	8
7	5D921	U-BOLT 1/2-13 X 3-1/4 X 2-5/8	3	3	3	3	4	4
8	1-861-010034-13	WASHER, LKG HLCL SPR, 1/2	6	6	6	6	8	8
9	1-512-010007-09	NUT, HEX 1/2-13 GR2 ZP	6	6	6	6	8	8
10	8J079	CENTER SCRAPER	1	1	1	1	1	1
11	8J014	SCRAPER, 2-1/2" WIDE	30	36	42	48	54	60
12	8J015	U-BOLT 3/8-16 X 3-1/4 X 2-7/16	32	38	44	50	56	62
13	1-861-010032-11	WASHER, FLAT 3/8 W ZP/CD	64	76	88	100	112	124
14	1-861-010034-11	WASHER, LKG HLCL SPR, 3/8	64	76	88	100	112	124
15	1-512-010007-07	NUT, HEX 3/8-16 GR2 ZP	64	76	88	100	112	124

Wheel Track Remover Kit - Optional

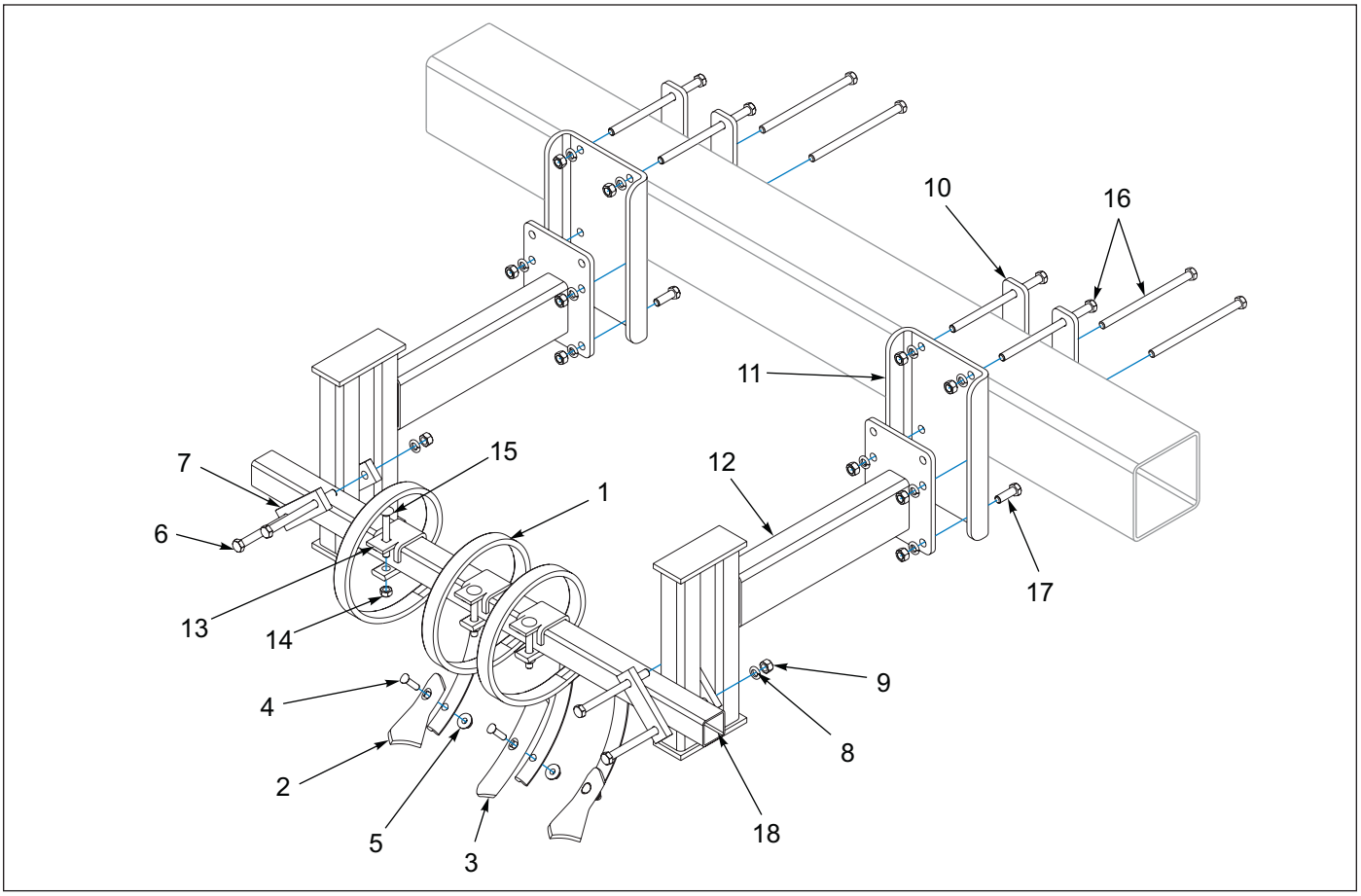

Figure 7-21: Wheel Track Remover Kit - Optional

Wheel Track Remover Kit - Optional

ITEM	PART NUMBER	DESCRIPTION	QTY
	5K977	PPD WHEEL TRACK REMOVER KIT	1
1	1J887	S-TINE, 10mm X 32mm	6
2	7D014	DUCKFOOT POINT 2-1/2"	4
3	2J155	HEAVY DUTY REVERSIBLE POINT	2
4	7D728	CULTIVATOR BOLT 3/8-16 X 1-3/4	6
5	5J616	FLANGE LOCK NUT 3/8-16	6
6	1-654-010055-17	SCREW,HEX CAP,1/2-13UNCX6 GR5	8
7	5J358	STRAP **(5")**	8
8	1-861-010034-13	WASHER, LKG HLCL SPR, 1/2	32
9	1-512-010007-09	NUT, HEX 1/2-13 GR2 ZP	32
10	3K320	STRAP **(8")**	8
11	174888	CHANNEL, ADAPTER	4
12	9J474	BRACKET WLDMT	4
13	1J834	CLAMP	6
14	101988	NUT,HEXSLF-LKG 7/16-14 GRB	6
15	2J241	SCREW 7/16-14NCX3-1/2RDHD SQNK	6
16	2P158	HHCS, 1/2-13 X 8, GR5, ZP	16
17	1-654-010055-03	SCREW,HEX CAP,1/2-13UNCX1-1/2	8
18	5K975	TOOTH BAR TUBE	2

Table provided for general use.

NOTES:

Decals

ITEM 1
8J309

ITEM 2
4K103

ITEM 3 - 6K657

ITEM 4
528934

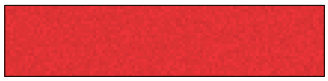

ITEM 5
528933

ITEM 6
528938

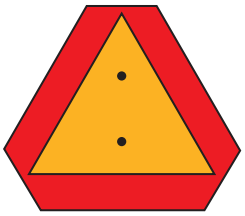

ITEM 7
2P151

ITEM 8
2-573-010198

ITEM 9
232188

ITEM 10
144193

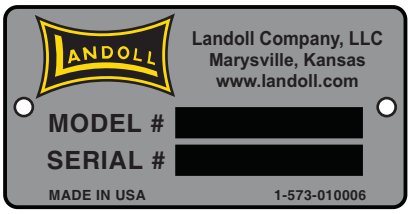

ITEM 11
1-573-010006

Figure 7-22: Decals

Decals

ITEM	PART NUMBER	DESCRIPTION	QTY
1	8J309	DECAL - 'CAUTION'	1
2	4K103	DECAL-BRILLION(3 3/4 X 16 3/4)	4
3	6K657	DECAL - OPTIMIZER PULVERIZER	2
4	528934	REFLECTOR - YELLOW	2
5	528933	REFLECTOR - RED	4
6	528938	STRIPE, ORANGE	4
7	2P151	SMV W/BRACKET	1
8	2-573-010198	DECAL, MEMBER FEMA	1
9	232188	DECAL, QR CODE PULVERIZER	1
10	144193	DECAL, SIS 20 MPH	1
11	1-573-010006	PLACARD, NAME	1
12	107-0814	RIVET 1/8X1/8 A LUM POP **(HARDWARE FOR ITEM 10)**	2

Decal Locations

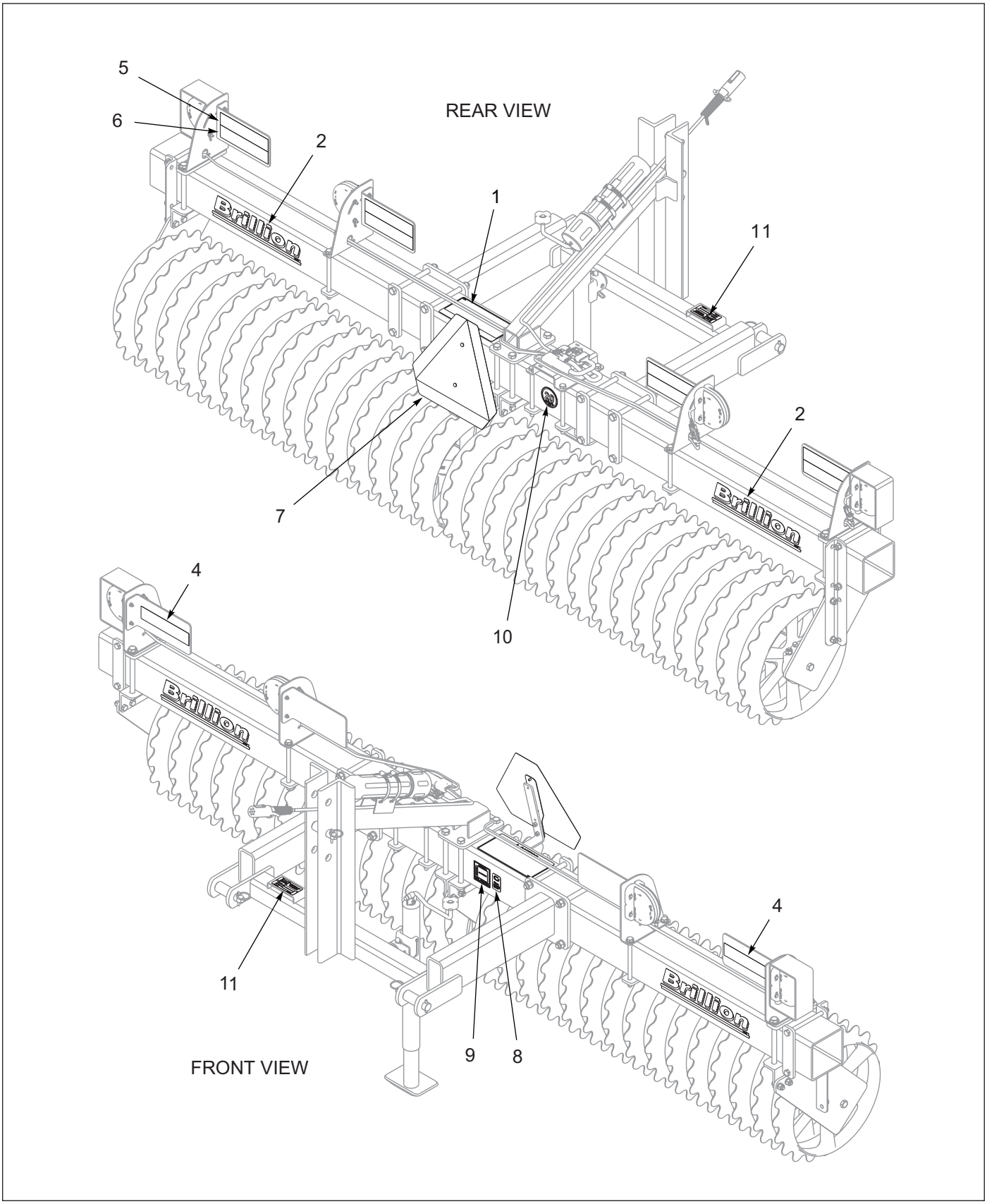

Figure 7-23: Decal Locations - Models with Notched Wheels

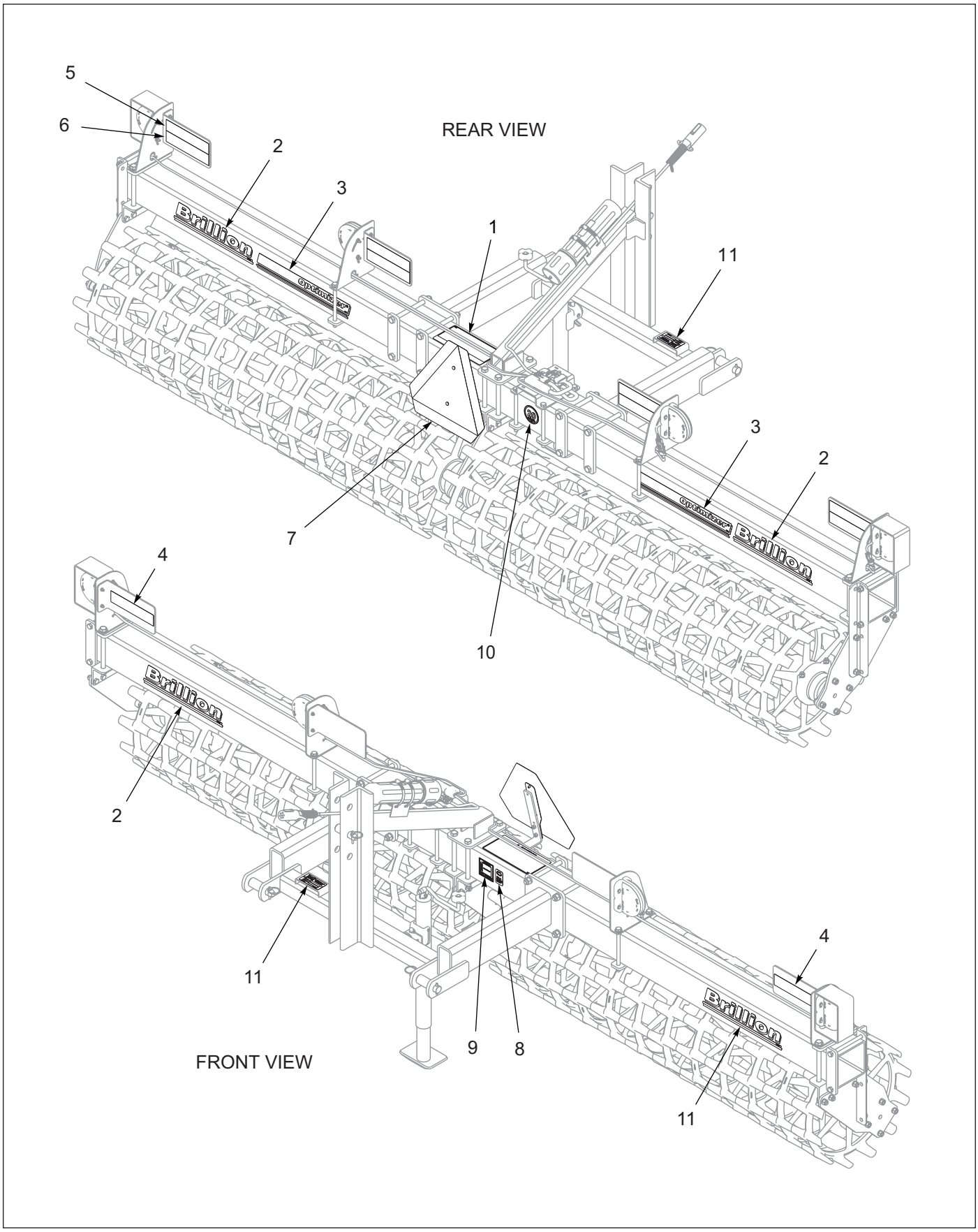

Figure 7-24: Decal Locations - Models with Optimizer Wheels

Table provided for general use.

NOTES:

Glossary

For clarity this glossary of industry standard abbreviations and their definitions are provided.

A

ASM . . . . . .Assembly

B

BATT . . . . . .Battery
BHSC . . . . . .Button Head Socket Cap
BLK . . . . . Black

C

CB . . . . . Carriage Bolt
CONN . . . . . Connector
CRG . . . . . Carriage
CTSK . . . . . Countersunk
CTWT . . . . . Counterweight
CVR . . . . . .Cover
CYD . . . . . Cylinder

D

DBL . . . . . .Double
DIA . . . . . Diameter

E

ENCLSD . . . . . Enclosed

F

FHCS . . . . . Flanged Head Cap Screw
FHHCS . . . . . Flanged Hex Head Cap Screw
FL OR **FLG** . . . . . Flange
FLT . . . . . Flat

G

GA . . . . . Gauge

H

HHCS . . . . . .Hex Head Cap Screw
HCS . . . . . High Carbon Steel
HD . . . . . .Head
HLCL . . . . . .Helical
HCSKT . . . . . .Hex Socket
HSFC . . . . . .Hex Socket Flat Countersunk
HYD . . . . . Hydraulic

I

ID . . . . . Inside Diameter

L

LH . . . . . Lefthand
LKG OR **LOCK** . . . . . .Locking
LWR . . . . . Lower

M

MANF . . . . . Manifold
MNT . . . . . Mount

N

NRW . . . . . Narrow
- - - - - . . . . . .Not Serviced Separately

O

OD . . . . . Outside Diameter
OHG . . . . . .Overhead Guard
ORFS OR **ORS** . . . . . O-Ring Seal
ORP OR **ORB** . . . . . .O-Ring Boss

P

P-STEER . . . . . .Power Steering
PTFE . . . . . Polytetrafluoroethylene (Teflon)

R

RH . . . . . Righthand
RND . . . . . Round

S

SER . . . . . Series
SHCS . . . . . .Socket Head Cap Screw
SHLD . . . . . Shield
SKT . . . . . .Socket
SLFLKG . . . . . Selflocking
SOC . . . . . .Socket
SPDT . . . . . Single Pole Double Throw
SPR . . . . . Spring
SQ . . . . . Square
SRTD . . . . . Serrated
SSCR . . . . . .Setscrew
SST . . . . . Stainless Steel
STD . . . . . .Standard

U

UPR . . . . . Upper

W

WHL . . . . . Wheel
WLD OR **WLDMT** . . . . . Weldment

Chapter 9

Index

Numerics

0A087 7-21
101386 . . . . . 7-8, 7-9, 7-10, 7-11
101988 7-31
104032 7-26
105-0093 7-7
105-0228 7-26
107-0814 7-34
108417 7-27
1-116-010019 7-7
142758 7-27
142759 7-27
144193 7-34
1-512-010005-01 7-26
1-512-010005-09 7-26
1-512-010007-07 7-30
1-512-010007-08 7-21
1-512-010007-09 7-2, 7-4, 7-6, 7-15, 7-27, 7-30, 7-31
1-512-010007-11 . . . . . 7-2, 7-4, 7-6, 7-7, 7-26, 7-30
1-557-010327 7-7
1-573-010006 7-34
164697 7-26
164698 7-26
1-647-010004221 7-7
1-654-010047-08 7-26
1-654-010047-09 7-26
1-654-010049-03 7-26
1-654-010055-03 . . . . . 7-2, 7-4, 7-6, 7-31
1-654-010055-04 . . . . . 7-2, 7-4, 7-6
1-654-010055-17 7-31
1-654-010055-20 . . . . . 7-2, 7-4, 7-6, 7-26
1-654-010059-21 . . . . . 7-2, 7-4, 7-6, 7-7, 7-26, 7-30
1-654-010080-2 7-15
174435 7-26
174436 7-26
174437 7-26
174888 7-31
178513 7-26
178514 7-26
178530 7-26
178534 7-26
1-861-010032-06 7-26
1-861-010032-11 7-30
1-861-010032-14 7-26
1-861-010032-18 7-26
1-861-010034-11 7-30
1-861-010034-12 7-21
1-861-010034-13 7-2, 7-4, 7-6, 7-15, 7-27, 7-30, 7-31
1-861-010034-15 . . 7-2, 7-4, 7-6, 7-7, 7-8, 7-9, 7-10, 7-26, 7-30
1C290 7-21
1D138 . . . . . 7-14, 7-16
1J834 7-31
1J887 7-31
232188 7-34
2-573-010198 7-34
2J155 7-31
2J241 7-31
2J374 . . . . . 7-12, 7-13
2J417 . . . . . 7-2, 7-6
2P151 . . . . . 7-26, 7-34
2P158 7-31
3D199 . . . . . 7-14, 7-16
3J185 . . . . . 7-19, 7-20, 7-22
3J186 . . . . . 7-19, 7-20, 7-22
3J187 7-19
3J561 7-27
3J615 . . . . . 7-26, 7-27
3J860 7-11

3K318 . . . . . 7-2, 7-4, 7-6
3K320 . . . . . 7-2, 7-4, 7-6, 7-26, 7-31
3K321 . . . . . 7-2, 7-4, 7-6, 7-7, 7-30
3K323 . . . . . 7-6, 7-20
3K699 7-30
4D529 . . . . . 7-8, 7-9, 7-10, 7-11
4J867 7-7
4K103 7-34
4K653 7-30
4K780 7-27
4K781 7-27
4K782 7-27
4K854 7-27
4K908 7-27
4K910 7-27
528933 . . . . . 7-26, 7-34
528934 . . . . . 7-26, 7-34
528938 . . . . . 7-26, 7-34
5C124 7-27
5D038 7-23
5D156 7-7
5D157 7-7
5D158 7-7
5D178 7-19
5D202 . . . . . 7-22, 7-23
5D921 7-30
5J358 7-31
5J375 . . . . . 7-14, 7-15
5J376 . . . . . 7-12, 7-19, 7-20, 7-21
5J616 7-31
5J760 7-19
5K726 . . . . . 7-2, 7-4
5K727 . . . . . 7-4, 7-6
5K728 . . . . . 7-4, 7-6
5K729 . . . . . 7-4, 7-6
5K730 7-6
5K731 7-6
5K736 7-7
5K744 . . . . . 7-6, 7-20
5K752 7-30
5K753 7-30
5K754 7-30
5K755 7-30
5K756 7-30
5K757 7-30
5K758 7-30
5K975 7-31
5K977 7-31
6D529 7-7
6K353 . . . . . 7-12, 7-19
6K354 . . . . . 7-12, 7-19
6K481 . . . . . 7-2, 7-12
6K484 7-19
6K485 . . . . . 7-6, 7-19
6K488 . . . . . 7-6, 7-19
6K490 . . . . . 7-6, 7-19
6K492 . . . . . 7-6, 7-19
6K494 . . . . . 7-6, 7-19
6K657 7-34
7D014 7-31
7D728 7-31
8C986 . . . . . 7-14, 7-16
8J001 7-14
8J014 7-30
8J015 7-30
8J068 . . . . . 7-4, 7-14
8J069 . . . . . 7-4, 7-14
8J079 7-30
8J099 . . . . . 7-2, 7-4, 7-6
8J309 7-34
8J993 . . . . . 7-4, 7-8
8J994 7-8
8J996 7-9
8J997 7-10
8J998 . . . . . 7-4, 7-9
8J999 . . . . . 7-4, 7-10

9C014 . . . . . *7-17*
9C015 . . . . . *7-18*
9C016 . . . . . *7-4*, *7-6*, *7-17*, *7-18*, *7-23*
9C031 . . . . . *7-15*
9C062 . . . . . *7-14*, *7-16*
9C129 . . . . . *7-13*, *7-22*
9C182 . . . . . *7-16*, *7-17*
9C183 . . . . . *7-16*, *7-18*
9D669 . . . . . *7-8*, *7-9*, *7-10*, *7-11*
9D673 . . . . . *7-15*
9D864 . . . . . *7-9*, *7-10*
9D866 . . . . . *7-8*
9J004 . . . . . *7-2*, *7-6*
9J006 . . . . . *7-11*
9J007 . . . . . *7-6*, *7-11*
9J027 . . . . . *7-4*, *7-14*
9J028 . . . . . *7-4*, *7-14*
9J029 . . . . . *7-7*
9J056 . . . . . *7-30*
9J057 . . . . . *7-30*
9J058 . . . . . *7-30*
9J059 . . . . . *7-30*
9J277 . . . . . *7-14*
9J474 . . . . . *7-31*
9J808 . . . . . *7-20*

Instructions for Ordering Parts

**** Repair parts must be ordered through an Authorized Dealer ****

DEALER INSTRUCTIONS FOR ORDERING PARTS FROM LANDOLL PARTS DISTRIBUTION CENTER

Phone #: 800-423-4320 or 785-562-5381 **Fax #: 888-527-3909**

Order online: dealer.landoll.com

DATA PLATE

The Data Plate, which lists the model number and serial number, is located on the right side of the Pulverizer.

SERIAL NUMBER

The following information will help decode the trailer serial number.

PXD2400123 = xxmyyssssss

xx	= model series (i.e. “PX” for all Pulverizers)
m	= month of manufacture (ex. “D” means April. The letter I is not used.)
yy	= last digits of the year manufactured (ex. “24” means 2024)
sssss	= Sequential number used to track warranty and service information.

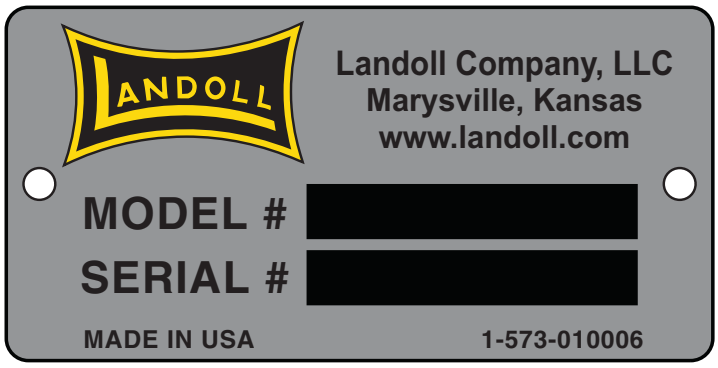

Figure: Data Plate

Manuals for PP Series Pulverizer

Manual Number	Manual Type
5K804	Operator’s and Parts Manual

Document Control Revision Log:

Date	Form #	Improvement(s): Description and Comments
08/2013	5K804-0813	Warning Lamp Update
08/2024	5K804-2408	ECN 50088 - Added Decals: QR Code, FEMA, 20MPH Update Template, Landoll P/Ns *Revised Format (Year/Month)

Equipment from Landoll Company, LLC is built to exacting standards ensured by ISO 9001:2015 registration at all Landoll manufacturing facilities.

Pick-Up Pulverizer
Models PPD10-20, PPO10-20
Operator's and Parts Manual

Re-Order Part Number 5K804

LANDOLL COMPANY, LLC
1900 North Street
Marysville, Kansas 66508
(785) 562-5381
800-428-5655 ~ WWW.LANDOLL.COM

Copyright 2026. Landoll Company, LLC
"All rights reserved, including the right to reproduce this material or portions thereof in any form."