2511N
Zone Commander
Models: 3, 4, 5 Shanks
Parts Manual

FOR MODELS BEFORE 04/15/2024
SEE F-757 RIGID & FOLDING ZONE COMMANDER

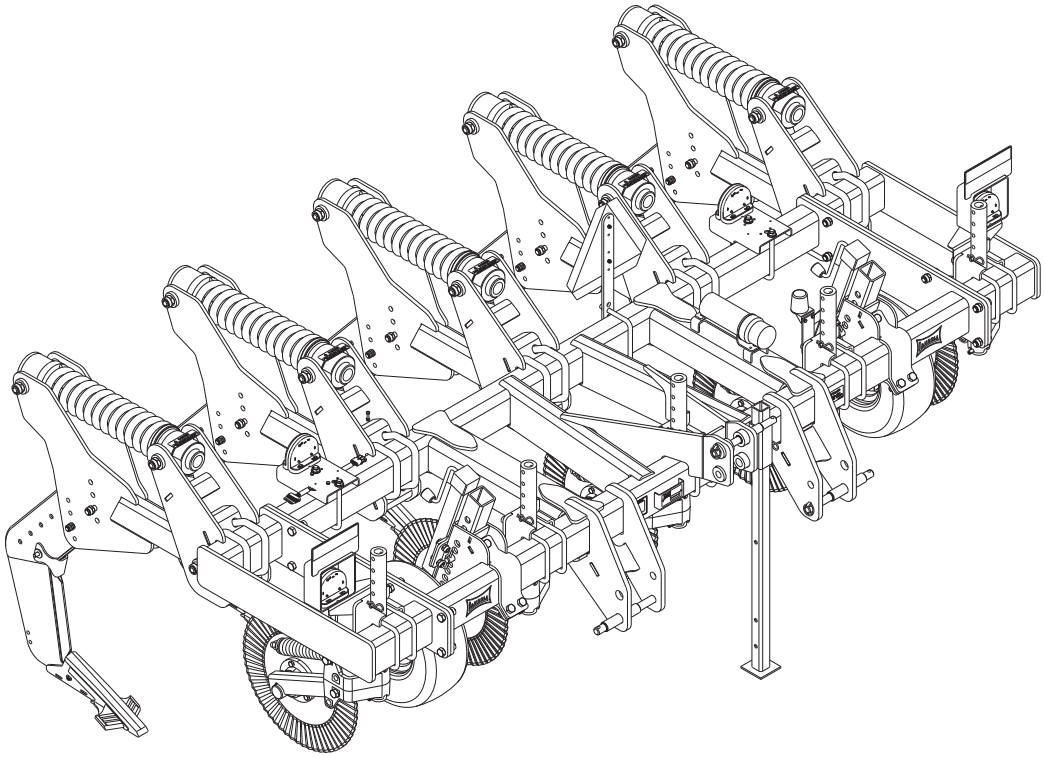

LANDOLL COMPANY, LLC
1900 North Street
Marysville, Kansas 66508
(785) 562-5381
800-428-5655 ~ WWW.LANDOLL.COM

F-1171-2610

Instructions for Ordering Parts

**** Repair parts must be ordered through an Authorized Dealer ****

DEALER INSTRUCTIONS FOR ORDERING PARTS FROM LANDOLL PARTS DISTRIBUTION CENTER

Phone: 800-423-4320 or 785-562-5381 **Fax: 888-527-3909**
Order online: dealer.landoll.com

DATA PLATE

The Data Plate, which lists the model number and serial number, is located on the front of the frame.

SERIAL NUMBER

The following information will help decode the serial number.

25C2400100 = xxmyyssssss

xx	= model series (i.e. “25” for all Zone Commanders)
m	= month of manufacture (ex. “C” means March. The letter I is not used.)
yy	= year manufactured (ex. “24” means 2024)
sssss	= sequential number used to track warranty and service information.

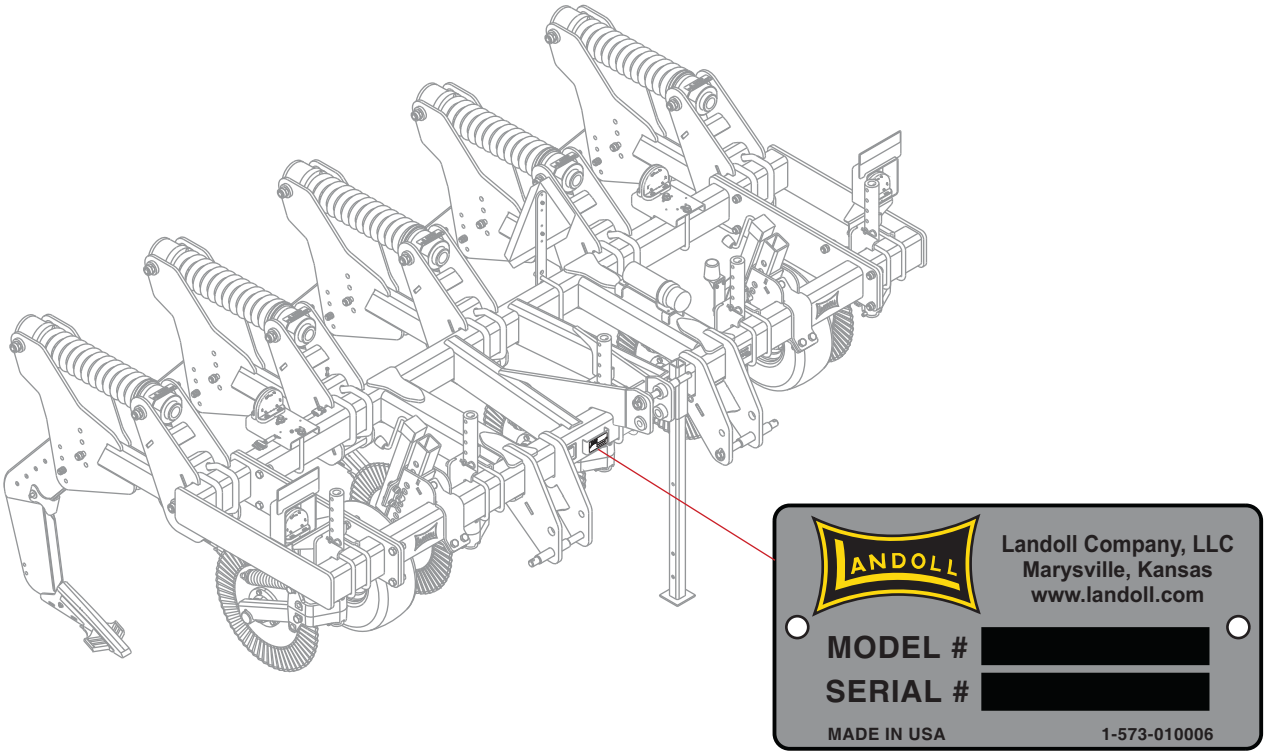

Figure: Data Plate and Location

Manuals for 2511N Zone Commanders - 3, 4, 5 Shanks

Manual Number	Manual Type
F-1172	Operator’s Manual
F-1171	Parts Manual

Table of Contents

1 Frame

Narrow Frame 1-1
Gauge Wheel Assembly 1-3
Auto Reset Clamp Assembly (AFTER 01/20/2026) 1-5
Auto Reset Clamp Assembly (BEFORE 01/20/2026) 1-6
Rigid Shear Bolt Clamp Assembly 1-7

2 Shanks and Points

Parabolic Shank, 1-1/4 2-1
Straight Leg Shank, 1-1/4 2-3
Straight Leg Shank, 3/4 (AFTER 02/2026) 2-5
Straight Leg Shank, 3/4 (BEFORE 02/2026) 2-7
Coverboard Kit 2-9
Points for 1-1/4 Shanks 2-11
Points for 3/4 Shank 2-12

3 Coulter Assemblies

Blade Coulter - Straight, Rippled & Pyramid Option (Left Hand) 3-1
Blade Coulter - Straight, Rippled & Pyramid Option (Right Hand) 3-3
Heavy Duty Coulter (AFTER 02/2022) 3-5
Heavy Duty Coulter (BEFORE 02/2022) 3-7

4 Electrical

Electrical - 3 & 4 Shanks 4-1
Electrical - 5 Shanks 4-3

5 Finishing Options

Closing Platform (AFTER 04/2024) 5-1
Closing Platform (02/2022 TO 04/2024) 5-3
Closing Platform (BEFORE 02/2022) 5-5
Closer Wheel 5-7
Flat Bar Basket - 20" 5-8
Closer Disc 5-9
Crumbler Reel 5-10
Packer Reel 5-11
Treader 5-12

6 Decals

Decals 6-1
Decal Locations 6-3

7 Glossary

8 Index

Frame

Narrow Frame

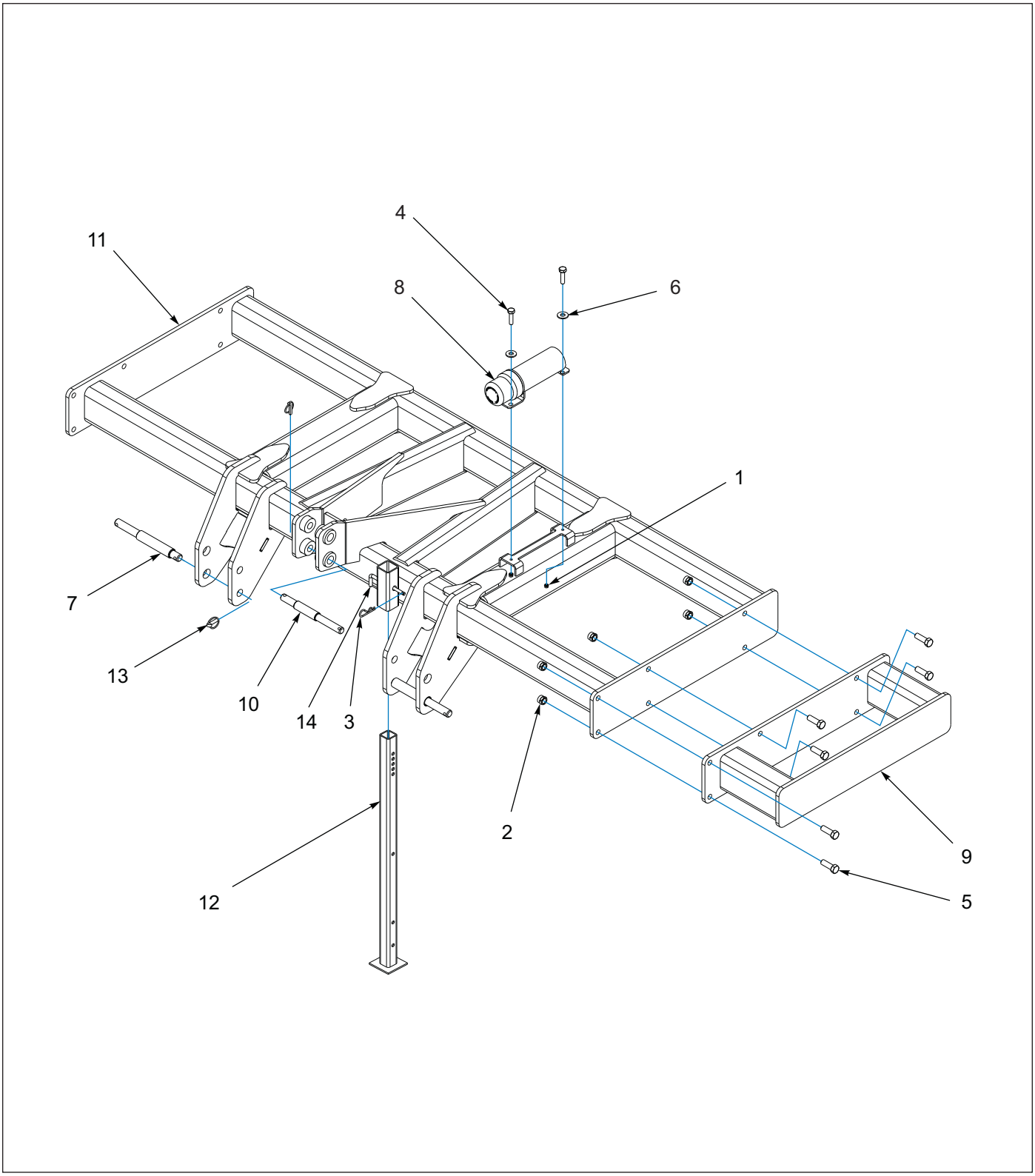

Figure 1-1: Narrow Frame

Narrow Frame

ITEM	PART NUMBER	DESCRIPTION	QTY.
1	1-512-010005-01	NUT, HEX, SLFLKG, 1/4-20 GRB	2
2	1-512-010005-15	NUT, HEX, SLFLKG, 3/4-10 GRB	12
3	1-557-010013	PIN, HAIR 3/16 DIA	1
4	1-654-010047-06	SCREW, HEX, 1/4-20 UNC X 1 GR5	2
5	1-654-010061-06	SCREW, HEX, 3/4-10 UNC X 2-1/4 GR5	12
6	1-861-010032-07	WASHER, FLAT 1/4W, ZP/CD	2
7	108841	PIN, LOWER, 3-POINT	2
8	142753	MANUAL HOLDER, 3-1/4" ID	1
9	179079	EXTENSION WLDMT, 12"	1
10	179548	PIN, UPPER, 3-POINT	1
11	179975	FRAME WLDMT, 8'	1
12	2-423-010034	JACK STAND WLDMT, H.C.	1
13	2-557-010009	PIN, LYNCH	3
14	8-557-010095	RIGID GAUGE WHEEL ADJUSTMENT PIN	1

Gauge Wheel Assembly

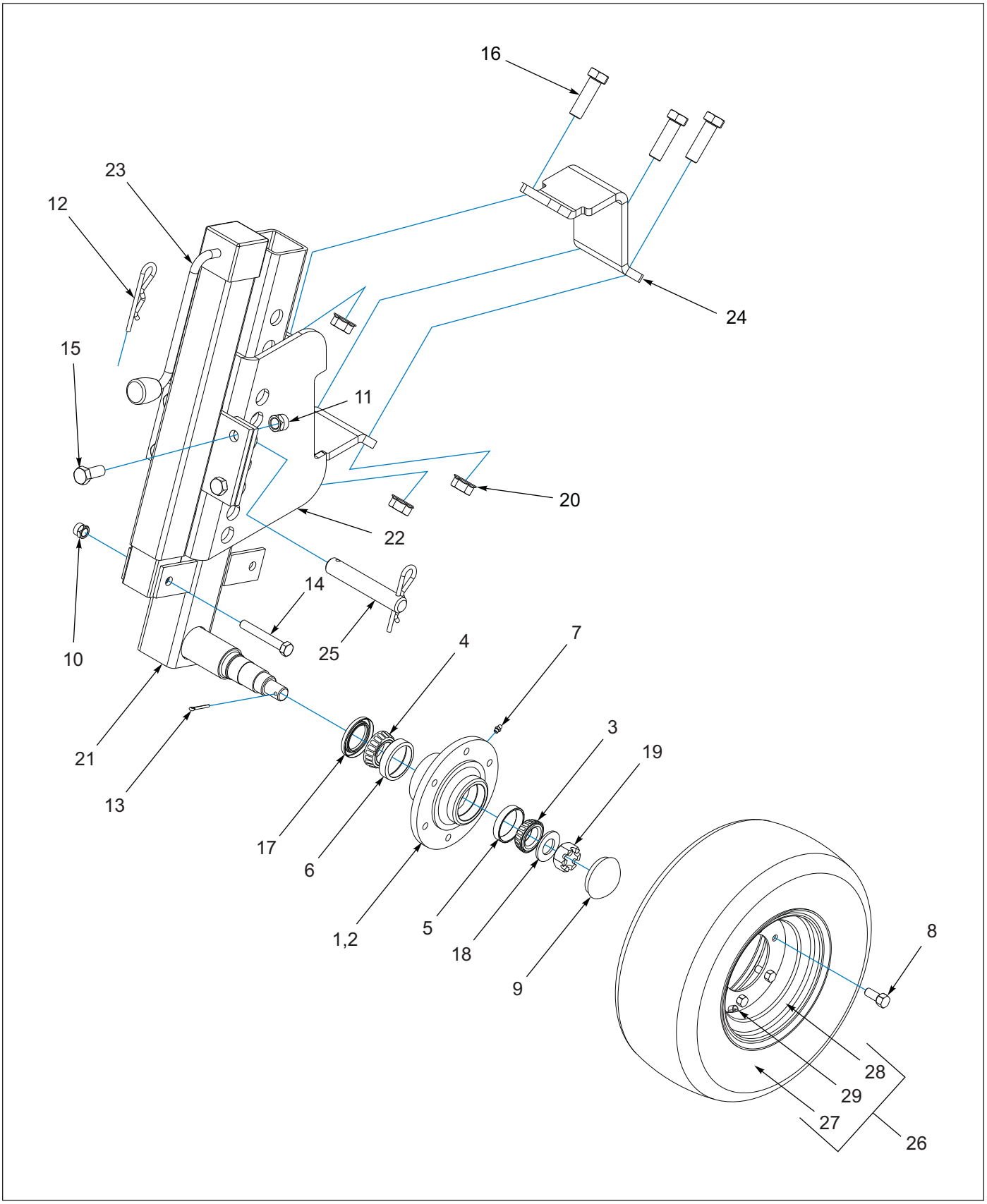

Figure 1-2: Gauge Wheel Assembly

Gauge Wheel Assembly

ITEM	PART NUMBER	DESCRIPTION	QTY.
1	1-406-010010	HUB ASSEMBLY, 6 BOLT **(ITEMS 2-9)**	1
2	1-406-010012	HUB, 6 BOLT W/ CUPS **(ITEMS 5-7)**	1
3	1-076-010007	CONE INNER	1
4	1-076-010009	CONE INNER	1
5	1-076-010010	CUP, OUTER BEARING	1
6	1-076-010012	CUP, INNER BEARING	1
7	1-298-010001-1	GREASE FITTING, 1/4-28	1
8	1-104-010002	BOLT, WHEEL	6
9	1-161-010003	CAP 6BOLT HUB **(DUST CAP)**	1
10	1-512-010005-09	NUT, HEX SLFLKG, 1/2-13 UNC, GRB	1
11	1-512-010005-13	NUT, HEX SLFLKG, 5/8-11 UNC, GRB	8
12	1-557-010014	PIN, HAIR 1/4 DIA	2
13	1-557-010362-40	PIN, COTTER 5/32 X 1-1/4	1
14	1-654-010055-11	SCREW, HEX, 1/2-13 X 3-1/2 UNC, GR5	1
15	1-654-010059-03	SCREW, HEX, 5/8-11 X 1-1/2 UNC, GR5	8
16	1-654-010061-07	SCREW, HEX CAP, 3/4-10 X 2-1/2 GR5	3
17	1-659-010004	SEAL, GREASE, 1-5/8 ID	1
18	1-861-010004	SPINDLE, WASHER, 7/8	1
19	100966	NUT, HEX SLOTTED, 7/8-14 UNC	1
20	103841	NUT, FLANGE, PREVAILING TORQUE, 3/4-10 GRB	3
21	108820	SPINDLE WELDMENT	1
22	197341	CLAMP WLDMT GAUGE WHEEL	1
23	109985	JACK, 7000# SIDEWIND	1
24	197344	BRKT, OUTER GA WHEEL CLAMP	1
25	8-557-010149	PIN, 11N DIA X 6	1
26	141271	TIRE & WHEEL ASSEMBLY, FRONT **(ITEMS 27-29)**	1
27	160151	TIRE, 20.5 X 8, 10/8 PLY	1
28	160155	WHEEL, 10 X 6 X 6 BOLT	1
29	TR416	VALVE STEM	1

Auto Reset Clamp Assembly (AFTER 01/20/2026)

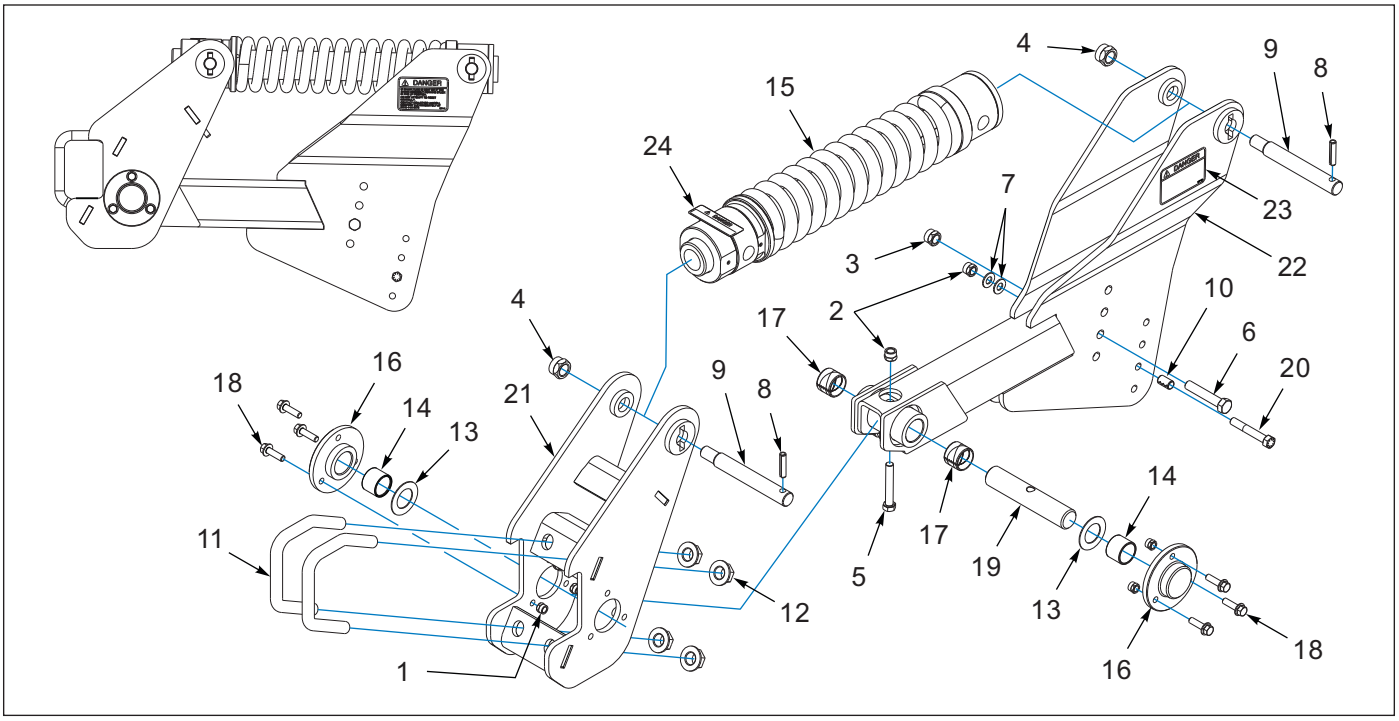

Figure 1-3: Auto Reset Clamp Assembly (AFTER 01/20/2026)

Auto Reset Clamp Assembly (AFTER 01/20/2026)

ITEM	PART NUMBER	DESCRIPTION	QTY.
	253811	CLAMP ASSEMBLY **(AUTO RESET)**	- -
1	1-512-010005-09	NUT,HEX,SLFLKG, 1/2-13 GRB	6
2	1-512-010005-13	NUT,HEX SLFLKG GRB 5/8-11	2
3	1-512-010005-15	NUT,HEX,SLFLKG GRB 3/4-10	1
4	1-512-010005-19	NUT 1-8 HEX SLF-LOCKING GRB	2
5	1-654-010059-13	SCREW HEX CAP 5/8-11X4UNC GR5	1
6	1-654-010061-13	SCREW,HX CP 3/4-10UNCX4 GR5	1
7	1-861-010032-18	WASHER, FLAT 5/8 N ZP/CD	2
8	141251	PIN, SPRING SLOTTED 1/2 X 2-1/4	2
9	144457	PIN, SHANK	2
10	150244	BUSHING,CNX-5/8 X 3/4 X 1-1/4	1
11	169492	BOLT, SHANK CLAMP	2
12	174732	NUT, FLG HD, TOPLOCK, 1-8 UNC	4
13	195566	WASHER THRUST 1-3/4 14 GA	2
14	210879	BEARING-HEF, 2.004X1.76X1-1/2	2
15	218785	SPRING-CLAMP, SHANK, ASSY	1
16	239522	CAP, CASTING MACHINED	2
17	240342	BUSHING,SPRG 2 X 1-3/4 X 1-1/2	2
18	243054	SCREW FLG HD 1/2-13X1-3/4 GR8	6
19	243129	PIN, SHANK PIVOT NITRO	1
20	253721	SCREW HEX CAP,5/8-11UNC-4,GR9	1
21	253809	CLAMP-TOOLBAR, SHANK, WELDMENT	1
22	253814	CLAMP-SHANK, 1-1/4, WELDMENT	1
23	2-573-010469	DECAL, DANGER SPRING	REF
24	207142	DECAL, DANGER STUCK SHANK	REF

Auto Reset Clamp Assembly (BEFORE 01/20/2026)

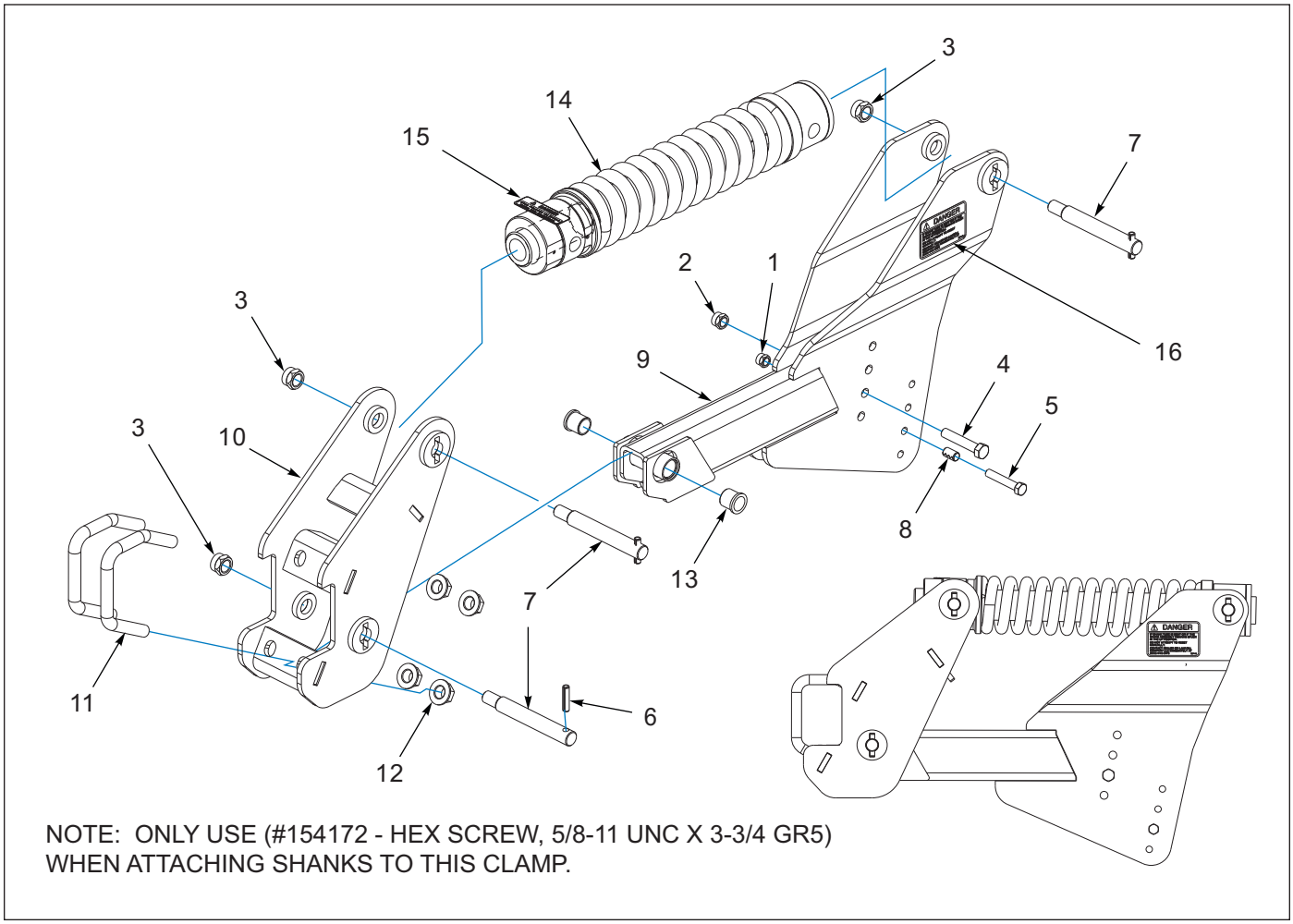

Figure 1-4: Auto Reset Clamp Assembly (BEFORE 01/20/2026)

Auto Reset Clamp Assembly (BEFORE 01/20/2026)

ITEM	PART NUMBER	DESCRIPTION	QTY.
	171811	CLAMP ASSEMBLY **(AUTO RESET)**	1
1	1-512-010005-13	NUT,HEX SLFLKG GRB 5/8-11	1
2	1-512-010005-15	NUT,HEX,SLFLKG GRB 3/4-10	1
3	1-512-010005-19	NUT, HEX SLFLKG, 1-8 UNC, GRB	3
4	1-654-010061-13	SCREW,HX CP 3/4-10UNCX4 GR5	1
5	138567	SCREW,HX CP 5/8-11UNCX3-1/2G8	1
6	141251	PIN, SPRING SLOTTED 1/2 X 2-1/4	3
7	144457	PIN, SHANK	3
8	150244	BUSHING,CNX-5/8 X 3/4 X 1-1/4	1
9	169484	CLAMP, SHANK, 1-1/4 WELDMENT	1
10	169486	CLAMP WLDMT TOOLBAR SHANK	1
11	169492	BOLT, SHANK CLAMP	2
12	174732	NUT, FLG HD, TOPLOCK, 1-8 UNC	4
13	184413	BEARING, FLANGE 1-1/4	1
14	218785	SPRING-CLAMP, SHANK, ASSY	1
15	2-573-010469	DECAL, DANGER SPRING	REF
16	207142	DECAL, DANGER STUCK SHANK	REF

Rigid Shear Bolt Clamp Assembly

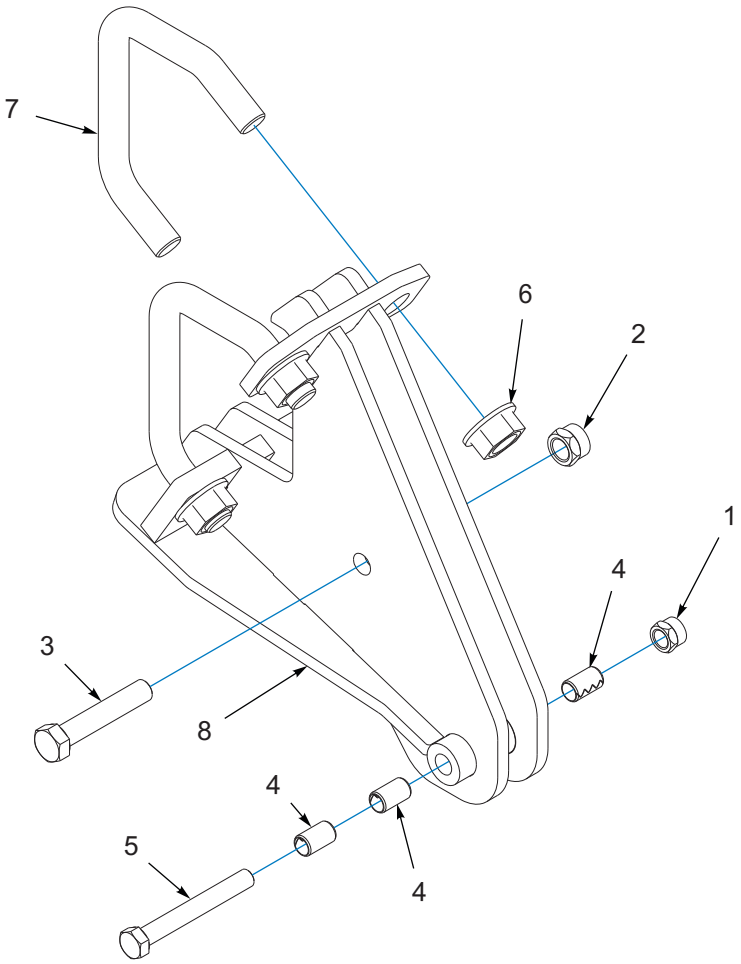

NOTE: ONLY USE (#172830 - HEX CAP SCREW, 5/8-11 UNC GR8)
WHEN ATTACHING SHANKS TO THIS CLAMP.

Figure 1-5: Rigid Shear Bolt Clamp Assembly

Rigid Shear Bolt Clamp Assembly

ITEM	PART NUMBER	DESCRIPTION	QTY.
	179563	RIGID CLAMP ASSEMBLY	1
1	1-512-010005-13	NUT,HEX SLFLKG GRB 5/8-11	1
2	1-512-010005-15	NUT,HEX,SLFLKG GRB 3/4-10	1
3	1-654-010061-13	SCREW,HX CP 3/4-10UNCX4 GR5	1
4	150244	BUSHING, CONNEX 5/8 X 3/4 X 1-1/4	3
5	172830	SCREW HX CP 5/8-11X5 GR8	1
6	174732	NUT, FLANGE HEAD TOPLOCK 1-8 GRB	4
7	174749	U-BOLT, 1" SHANK CLAMP	2
8	179551	CLAMP, SHEAR BOLT	1

Table provided for general use.

NOTES:

Shanks and Points

Parabolic Shank, 1-1/4

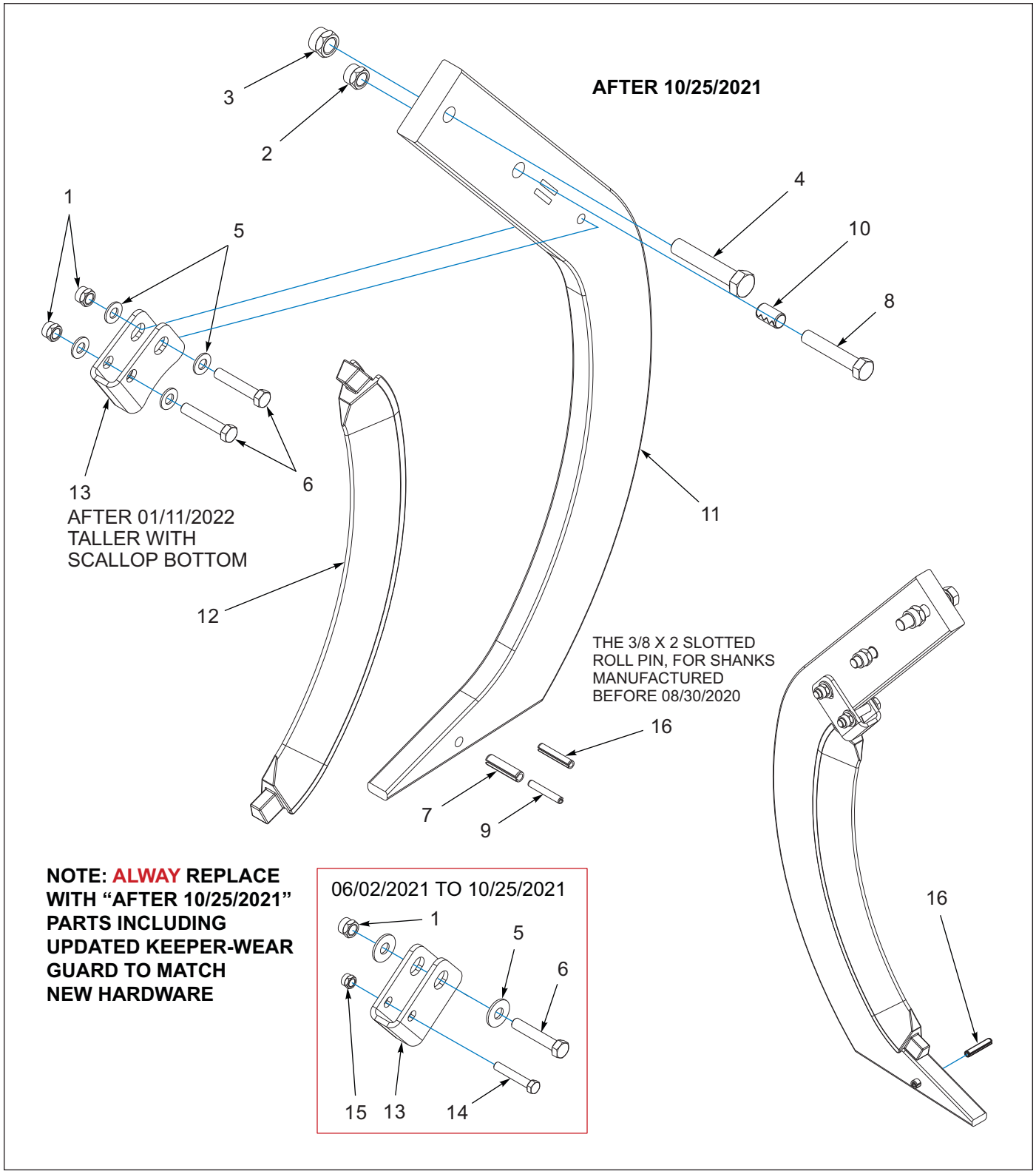

Figure 2-1: Parabolic Shank, 1-1/4

Parabolic Shank, 1-1/4

ITEM	PART NUMBER	DESCRIPTION	QTY.
	224746	SHANK, 1-1/4, PARABOLIC, ASM **(INCL. ITEMS 1, 5-7, 9, 11-16)**	1
1	1-512-010005-09	NUT,HEX,SLFLKG, 1/2-13 GRB	2
2	1-512-010005-13	NUT,HEX SLFLKG GRB 5/8-11 **(PART OF CLAMP ASM)**	1
3	1-512-010005-15	NUT,HEX,SLFLKG GRB 3/4-10 **(PART OF CLAMP ASM)**	1
4	1-654-010061-13	SCREW,HX CP 3/4-10UNCX4 GR5 **(PART OF CLAMP ASM)**	1
5	1-861-010032-14	WASHER, FLAT 1/2" N ZP/CD **(AFTER 10/25/2021)**	4
5	1-861-010032-15	WASHER, FLAT 1/2 W ZP/CD **(BEFORE 10/25/2021)**	2
6	101510	SCREW HXCP1/2-13UNCX2-3/4 G5	2
7	127351	PIN, SPRING, SLOTTED 1/2X2	1
8	138567	SCREW,HX CP 5/8-11UNCX3-1/2G8 **(PART OF CLAMP ASM)**	1
9	147072	PIN, SPRING SLOTTED 5/16 X 2	1
10	150244	BUSHING,CNX-5/8 X 3/4 X 1-1/4 **(PART OF CLAMP ASM)**	1
11	169493	SHANK, 1-1/4 X 4, BOLT-IN,2410	1
12	224747	GUARD-WEAR, PARABOLIC	1
13	224748	KEEPER-WEAR GUARD,PARABOLIC **(ALWAYS REPLACE WITH UPDATED KEEPER WEAR GUARD TO MATCH NEW HARDWARE) (SEE PAGE 2-1)** **(**AFTER 01/11/2022, TALLER W/SCALLOP BOTTOM)**	1
14	1-654-010051-10	SCREW,HX CP3/8-16X2-1/4 GR5 **(06/02/2021 TO 10/25/2021)**	1
15	1-512-010005-05	NUT, HEX, SLFLKG GRB 3/8-16 **(06/02/2021 TO 10/25/2021)**	1
16	1-647-010004255	PIN, SPRING, SLOTTED 3/8X2 **(ADDED 10/05/2021)** **(TO BE USED W/SHANKS MANUFACTURED BEFORE 08/30/2020)**	1

Straight Leg Shank, 1-1/4

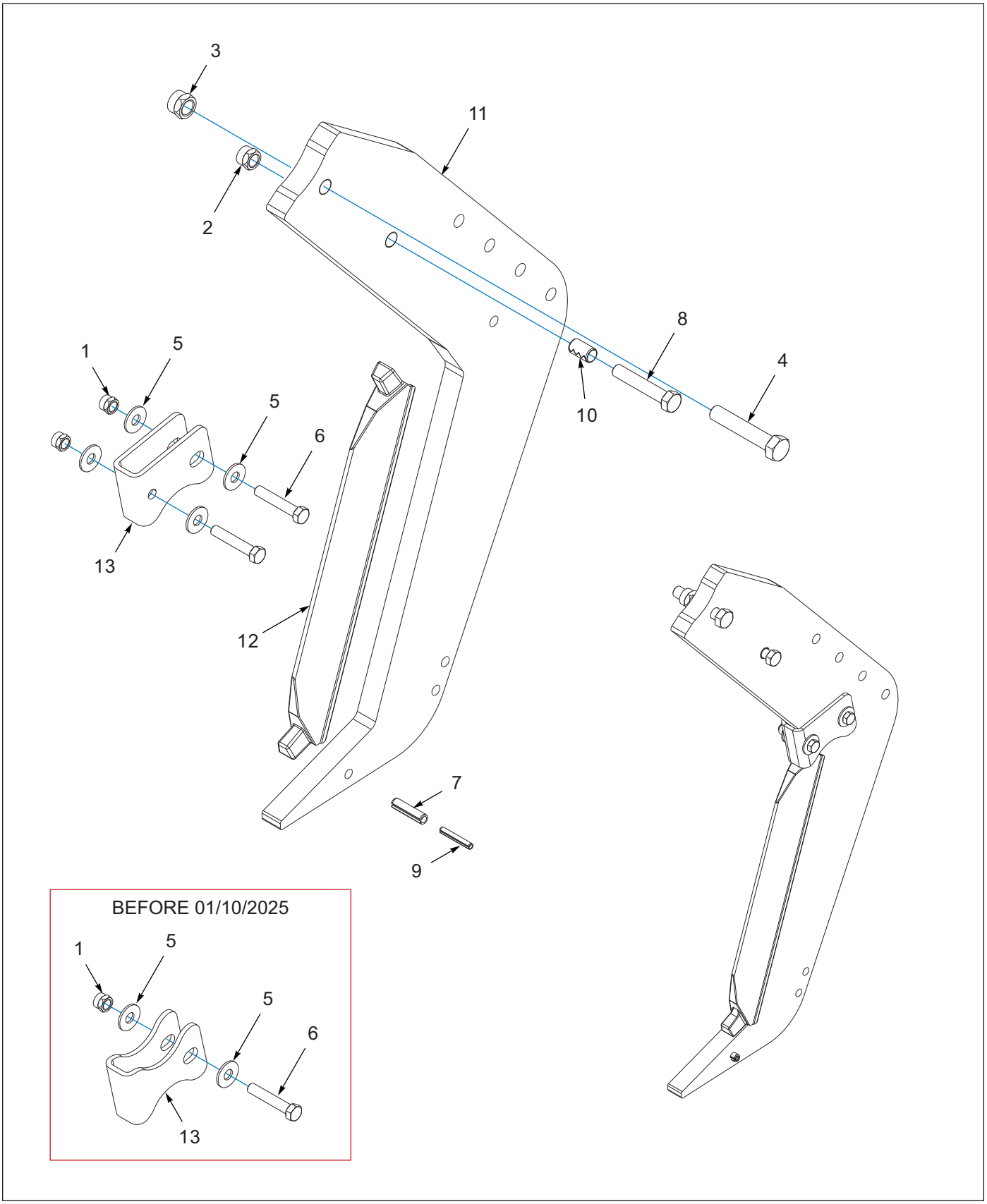

Figure 2-2: Straight Leg Shank, 1-1/4

Straight Leg Shank, 1-1/4

ITEM	PART NUMBER	DESCRIPTION	QTY.
	224744	SHANK, 1-1/4, STRAIGHT LEG, ASM **(INCL. ITEMS 1, 5-7, 9, 11-13)**	1
1	1-512-010005-09	NUT,HEX,SLFLKG, 1/2-13 GRB **(BEFORE 01/10/2025, QTY=1)**	2
2	1-512-010005-13	NUT,HEX SLFLKG GRB 5/8-11 **(PART OF CLAMP ASM)**	1
3	1-512-010005-15	NUT,HEX,SLFLKG GRB 3/4-10 **(PART OF CLAMP ASM)**	1
4	1-654-010061-13	SCREW,HX CP 3/4-10UNCX4 GR5 **(PART OF CLAMP ASM)**	1
5	1-861-010032-15	WASHER, FLAT 1/2 W ZP/CD **(BEFORE 01/10/2025, QTY=2)**	4
6	101510	SCREW HXCP1/2-13UNCX2-3/4 G5 **(BEFORE 01/10/2025, QTY=1)**	2
7	127351	PIN, SPRING, SLOTTED 1/2X2	1
8	172830	SCREW, HEX CAP, 5/8-11 X 5 GR8 **(USED W/ RIGID SHEAR BOLT CLAMP ONLY)**	1
8	138567	SCREW,HX CP 5/8-11UNCX3-1/2G8 **(USED W/ AUTO RESET CLAMP ONLY)**	1
9	147072	PIN, SPRING SLOTTED 5/16 X 2	1
10	150244	BUSHING,CNX-5/8 X 3/4 X 1-1/4 **(PART OF AUTO RESET CLAMP ASM)**	1
11	224743	SHANK- 1-1/4 STRAIGHT LEG	1
12	224745	GUARD-WEAR, STRAIGHT LEG	1
13	224752	KEEPER-WEAR GUARD,STR LEG	1

Straight Leg Shank, 3/4 (AFTER 02/2026)

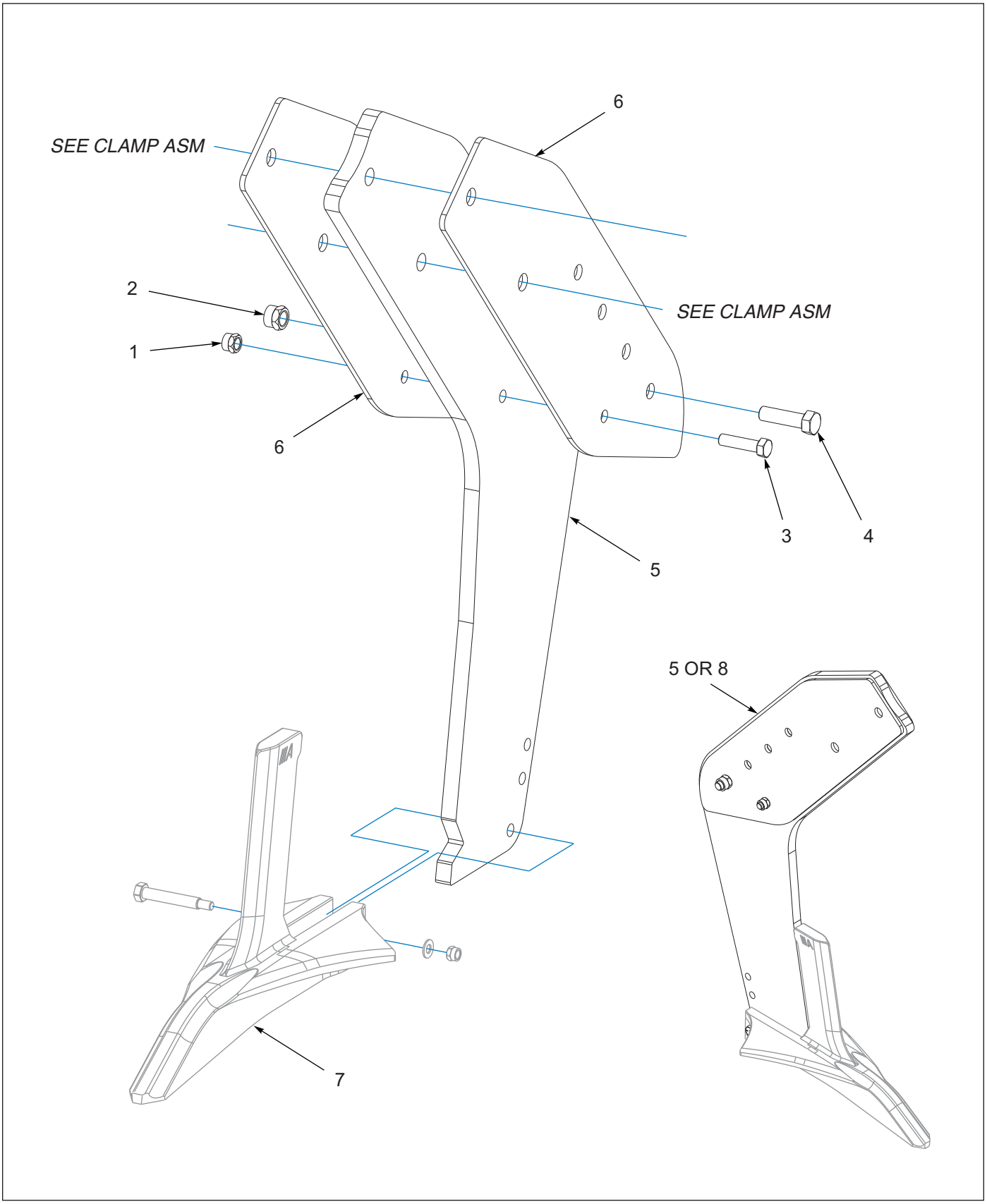

Figure 2-3: Straight Leg Shank, 3/4 (AFTER 02/2026)

Straight Leg Shank, 3/4 (AFTER 02/2026)

ITEM	PART NUMBER	DESCRIPTION	QTY.
	253740	SHANK-3/4, STRAIGHT LEG, ASM	1
1	1-512-010005-09	NUT,HEX,SLFLKG, 1/2-13 GRB	1
2	1-512-010005-13	NUT,HEX SLFLKG GRB 5/8-11	1
3	1-654-010055-05	SCREW,HEX CAP,1/2-13UNCX2 GR5	1
4	1-654-010059-06	SCREW,HEX CAP 5/8-11X2-1/4 G5	1
5	253759	PLATE-SHANK, 3/4, NO TILL	1
6	253760	PLATE-GUSSET, SHANK	2
7	245220	POINT-NO TILL, SUPERRIP, 8IN **(SEE PAGE 2-12)**	1

Straight Leg Shank, 3/4 (BEFORE 02/2026)

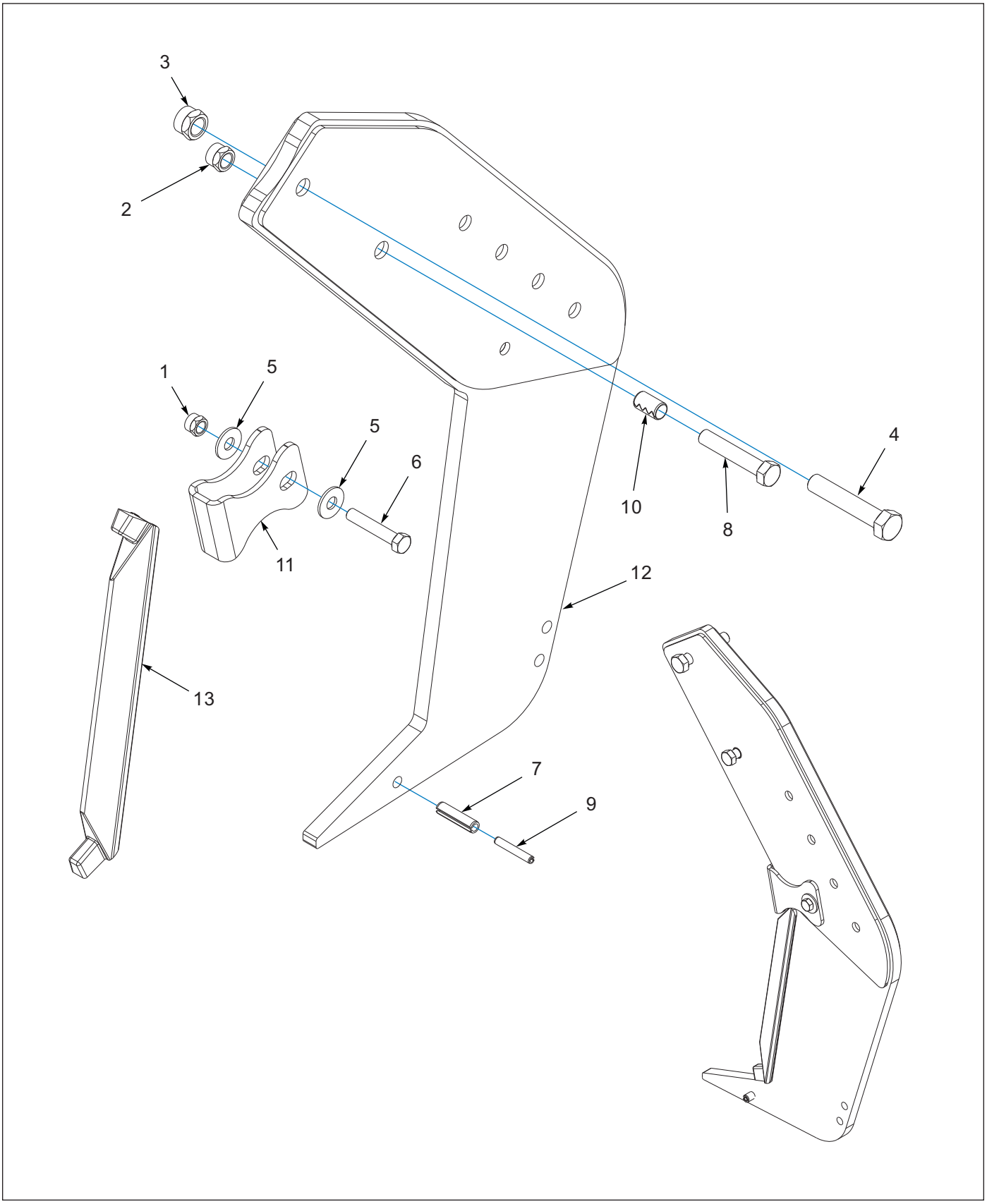

Figure 2-4: 3/4 Shanks (BEFORE 02/2026)

Straight Leg Shank, 3/4 (BEFORE 02/2026)

ITEM	PART NUMBER	DESCRIPTION	QTY.
	224768	SHANK, 3/4, STRAIGHT LEG, ASM **(INCL. ITEMS 1, 5-7, 9, 11-13)**	1
1	1-512-010005-09	NUT,HEX,SLFLKG, 1/2-13 GRB	1
2	1-512-010005-13	NUT,HEX SLFLKG GRB 5/8-11 **(PART OF CLAMP ASM)**	1
3	1-512-010005-15	NUT,HEX,SLFLKG GRB 3/4-10 **(PART OF CLAMP ASM)**	1
4	1-654-010061-13	SCREW,HX CP 3/4-10UNCX4 GR5 **(PART OF CLAMP ASM)**	1
5	1-861-010032-15	WASHER, FLAT 1/2 W ZP/CD	2
6	101510	SCREW HXCP1/2-13UNCX2-3/4 G5	1
7	127351	PIN, SPRING, SLOTTED 1/2X2	1
8	172830	SCREW, HEX, 5/8-11 X 5-1/2 GR8 **(USED W/ RIGID SHEAR BOLT CLAMP ONLY)**	1
8	138567	SCREW,HX CP 5/8-11UNCX3-1/2G8 **(USED W/ AUTO RESET CLAMP ONLY)**	1
9	147072	PIN, SPRING SLOTTED 5/16 X 2	1
10	150244	BUSHING,CNX-5/8 X 3/4 X 1-1/4 **(PART OF AUTO RESET CLAMP ASM)**	1
11	224752	KEEPER-WEAR GUARD,STR LEG	1
12	224763	SHANK-STRAIGHT LEG, 3/4 WLDMT	1
13	224767	GUARD-WEAR, STRAIGHT LEG, 3/4	1

Coverboard Kit

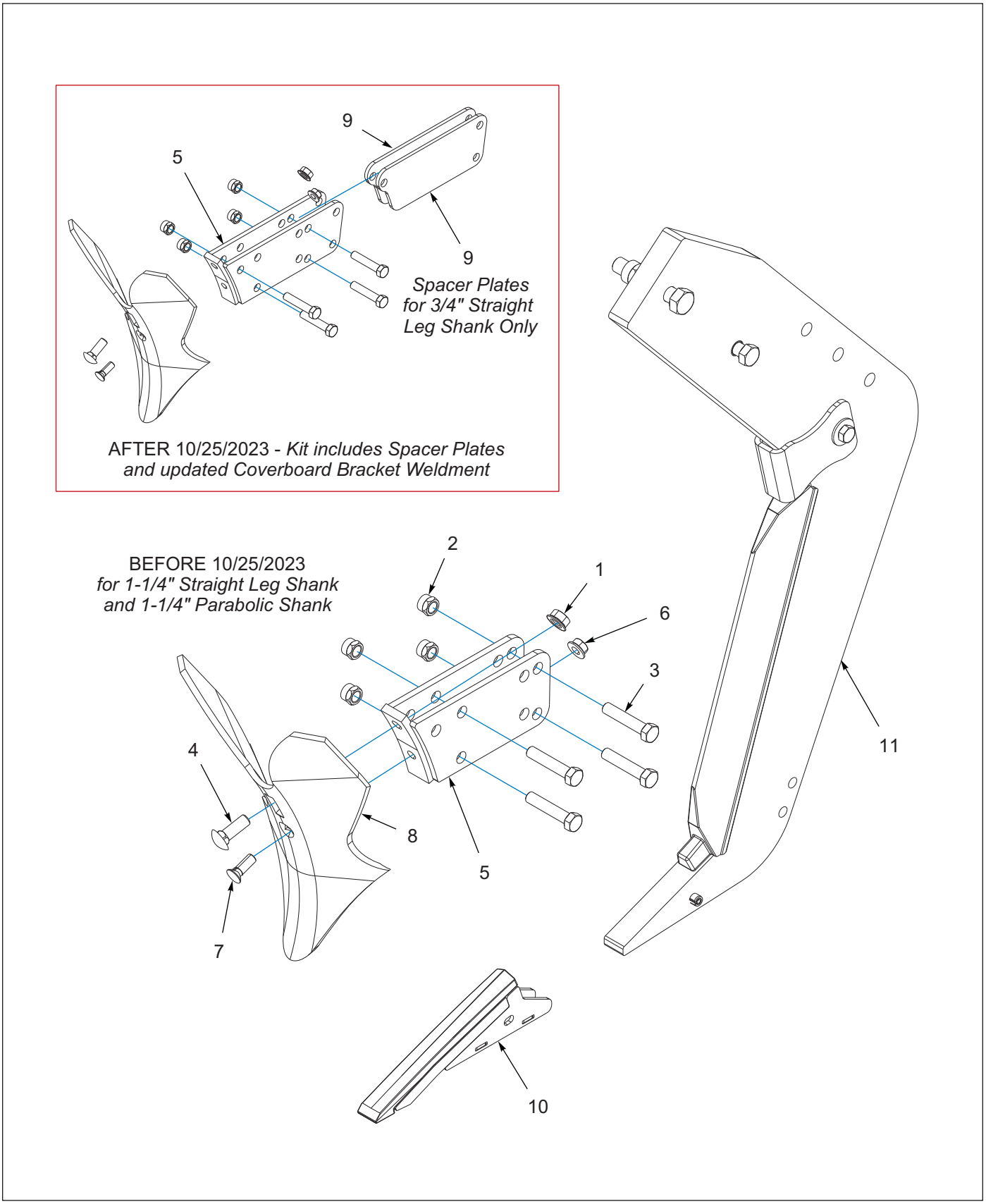

Figure 2-5: Coverboard Kit

Coverboard Kit

ITEM	PART NUMBER	DESCRIPTION	QTY.
	227299	KIT-COVER BOARD, 2512 **(AFTER 10/25/2023 - USED WITH 224744, 224746 AND 224768)**	1
1	1-510-010003-09	NUT,1/2-13 FLANGE HD,SERRATED	1
2	1-512-010005-09	NUT,HEX,SLFLKG, 1/2-13 GRB	4
3	1-654-010055-07	SCREW HX CP 1/2-13UNCX2-1/2	4
4	1-654-010070-03	SCREW RDHD SQNK1/2-13X1-1/2	1
5	214396	BRACKET-COVERBOARD WLDMT	1
6	4K551	SELF-LOCKING FLANGE NUT	1
7	5J425	BOLT PLOW 7/16-14 X 1-1/4	1
8	6K478	FURROWER FOR COVERBOARD	1
9	247319	PLATE-SPACER, BRACKET **(SPACER PLATES FOR 224768, 3/4" STRAIGHT LEG SHANK ONLY - ADDED TO KIT 10/25/2023)**	2
10	227247	1-1/4,PLN,CHRM CAP,2-1/2 **(SHOWN)** **(SEE PAGE 2-11 FOR AVAILABLE POINTS)**	- -
11	224744	SHANK, 1-1/4,STRAIGHT LEG, ASM **(SHOWN) (SEE PAGE 2-3)**	- -
11	224746	SHANK, 1-1/4, PARABOLIC, ASM **(NOT SHOWN) (SEE PAGE 2-1)**	- -
11	224768	SHANK, 3/4, STRAIGHT LEG, ASM **(NOT SHOWN) (SEE PAGE 2-5)**	- -

Points for 1-1/4 Shanks

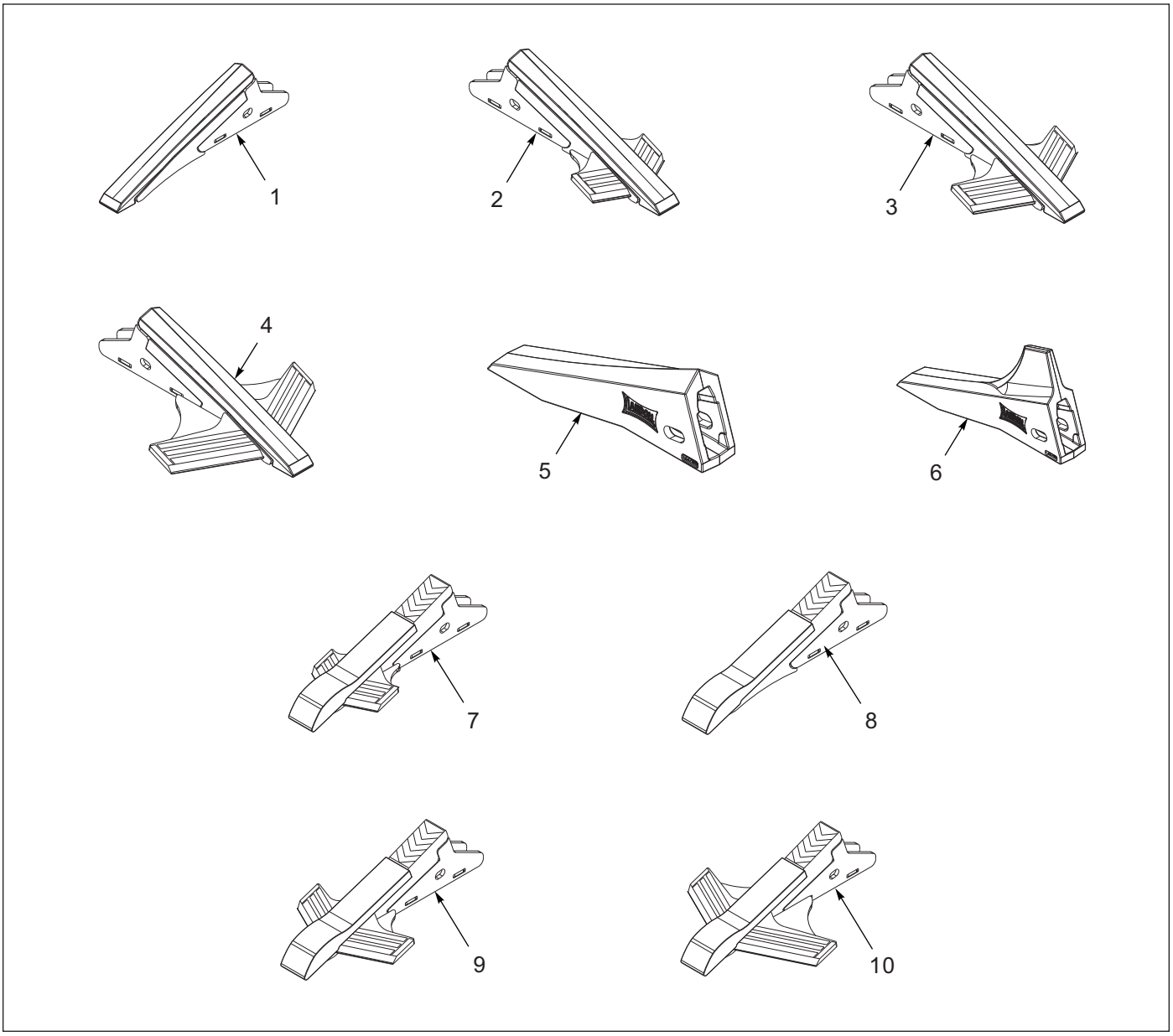

Figure 2-6: Points for 1-1/4

Points for 1-1/4 Shanks

ITEM	PART NUMBER	DESCRIPTION	QTY.
1	227247	1-1/4,PLN,CHRM CAP,2-1/2	- -
2	227207	1-1/4,WNGD,7,CHRM CAP,2-1/2	- -
3	227210	1-1/4,WNGD,10,CHRM CAP,2-1/2	- -
4	227198	1-1/4,WNGD,WIDE,CHRM CAP,2-1/2	- -
5	227189	1-1/4,PLN,CADI,2-1/2	- -
6	227191	1-1/4,CADI,FIN,2-1/2	- -
7	227265	1-1/4, WINGD,7,CST STL CAP	- -
8	227267	1-1/4, PLN,2-1/2 CST STL CAP	- -
9	227272	1-1/4,WNGD,10,CST STL CAP	- -
10	227273	1-1/4,WINGD,WIDE,CST STL CAP	- -

Points for 3/4 Shank

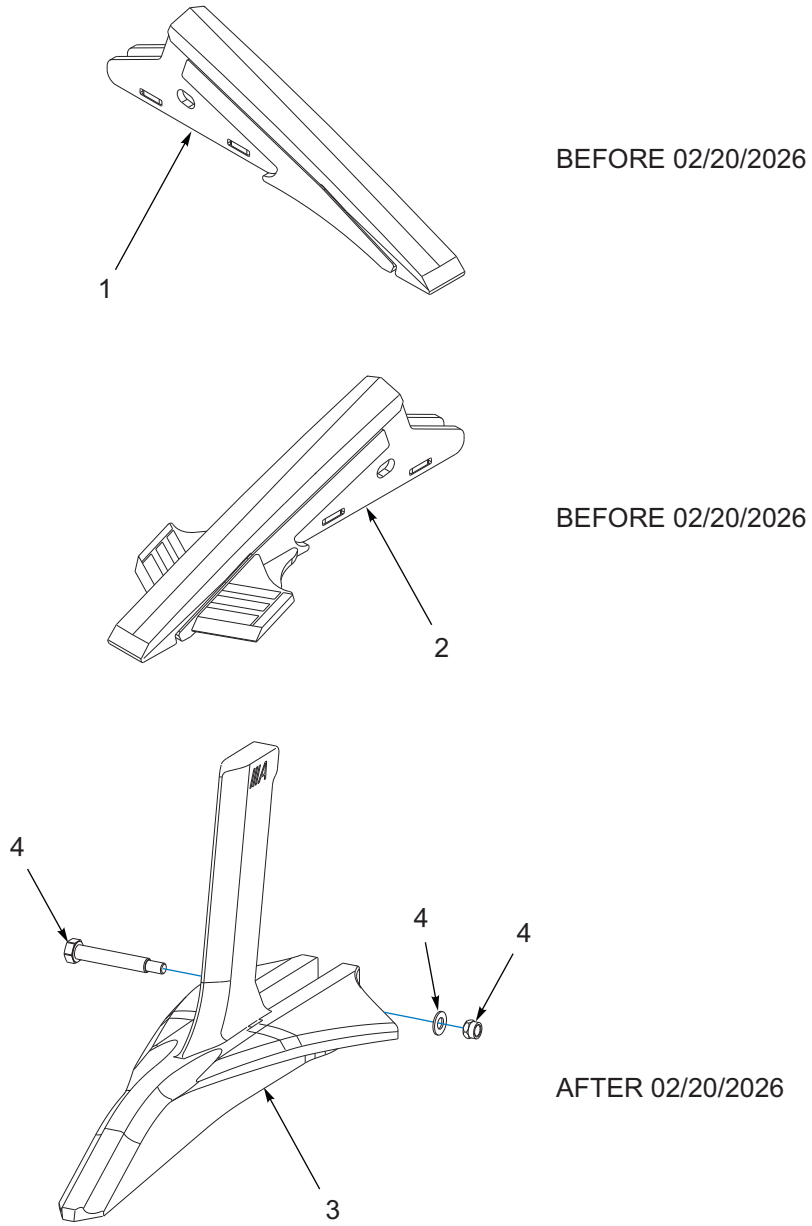

Figure 2-7: Points for 3/4 Shank

Points for 3/4 Shank

ITEM	PART NUMBER	DESCRIPTION	QTY.
1	227221	3/4,PLN,CHRM CAP, 2 **(BEFORE 02/2026)**	- -
2	227245	3/4,WNGD, 7,CHARM CAP WLDMT **(BEFORE 02/2026)**	- -
3	245220	POINT-NO TILL, SUPERRIP, 8IN **(AFTER 02/2026)** **(INCLUDES HARDWARE, ITEM 4)**	- -
4	253742	KIT-BOLT,1/2 X 3/8-16 X 3-3/8 **(AFTER 02/2026)** **(SERVICE PART NUMBER FOR ITEM 3, HARDWARE ONLY)** **(KIT INCLUDES BOLT, WASHER AND LOCKNUT, INDIVIDUAL PARTS NOT SOLD SEPARATELY)**	- -

Coulter Assemblies

Blade Coulter - Straight, Rippled & Pyramid Option (Left Hand)

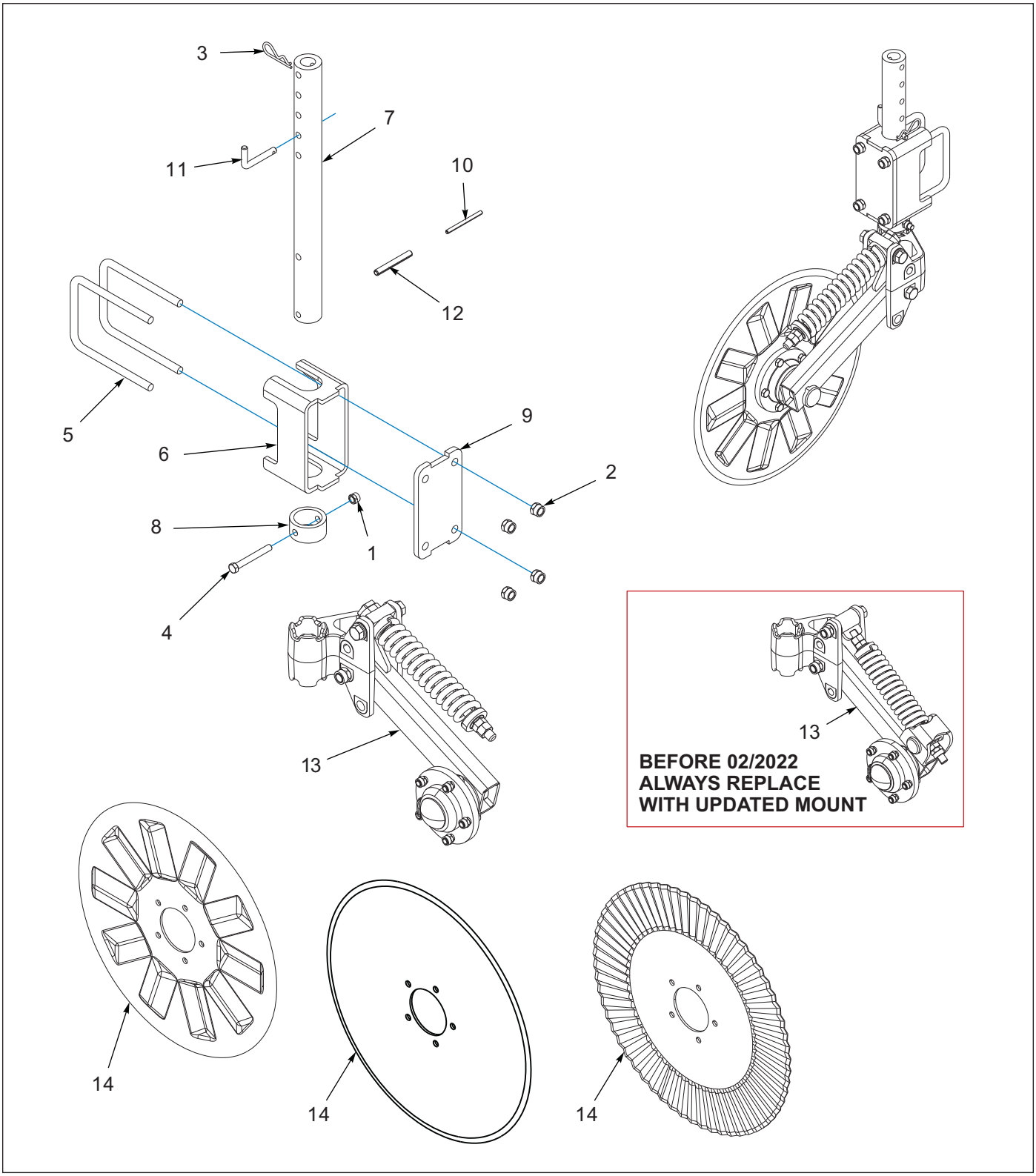

Figure 3-1: Blade Coulter - Straight, Rippled & Pyramid Option (Left Hand)

Blade Coulter - Straight, Rippled & Pyramid Options (Left Hand)

ITEM	PART NUMBER	DESCRIPTION	QTY.
	233873	COULTER-HD, STRAIGHT BLADE, LH **(AFTER 02/2022)**	- -
	233875	COULTER-HD, RIPPLED BLADE, LH **(AFTER 02/2022)**	- -
	233877	COULTER-HD, PYRAMID BLADE, LH **(AFTER 02/2022)**	- -
	181844	22 COULTER HD SMOOTH BLADE LH **(BEFORE 02/2022)**	- -
	181843	22 COULTER HD RIPPLED BLADE LH **(BEFORE 02/2022)**	- -
	181845	22 COULTER HD PYRAMID BLADE LH **(BEFORE 02/2022)**	- -
1	1-512-010005-09	NUT,HEX,SLFLKG, 1/2-13 GRB	1
2	1-512-010005-13	NUT,HEX SLFLKG GRB 5/8-11	4
3	1-557-010013	PIN, HAIR 3/16 DIA	1
4	1-654-010055-13	SCREW,HEX CAP,1/2-13UNCX4 GR5	1
5	149192	U-BOLT,6-11/16 CENTERS X 8-1/2	2
6	179082	COULTER CLAMP TUBE	1
7	179545	COULTER ADJUST TUBE	1
8	179546	COULTER STOP	1
9	179547	CLAMP PLATE	1
10	5D954	ROLL PIN 5/16 X 4	1
11	8-557-010095	PIN RIGID GA WHEEL 800	1
12	8K756	ROLL PIN 1/2 x 4	1
13	233841	MOUNT-COULTER, LH ASSY **(AFTER 02/2022) (SEE PAGE 3-5)**	1
13	182241	COULTER ASSY, HD **(BEFORE 02/2022) (SEE PAGE 3-7)**	1
14	179966	COULTER BLADE 22 PYRAMID	1
14	176846	COULTER 22" SMOOTH	1
14	9K289	22" COULTER	1

Blade Coulter - Straight, Rippled & Pyramid Option (Right Hand)

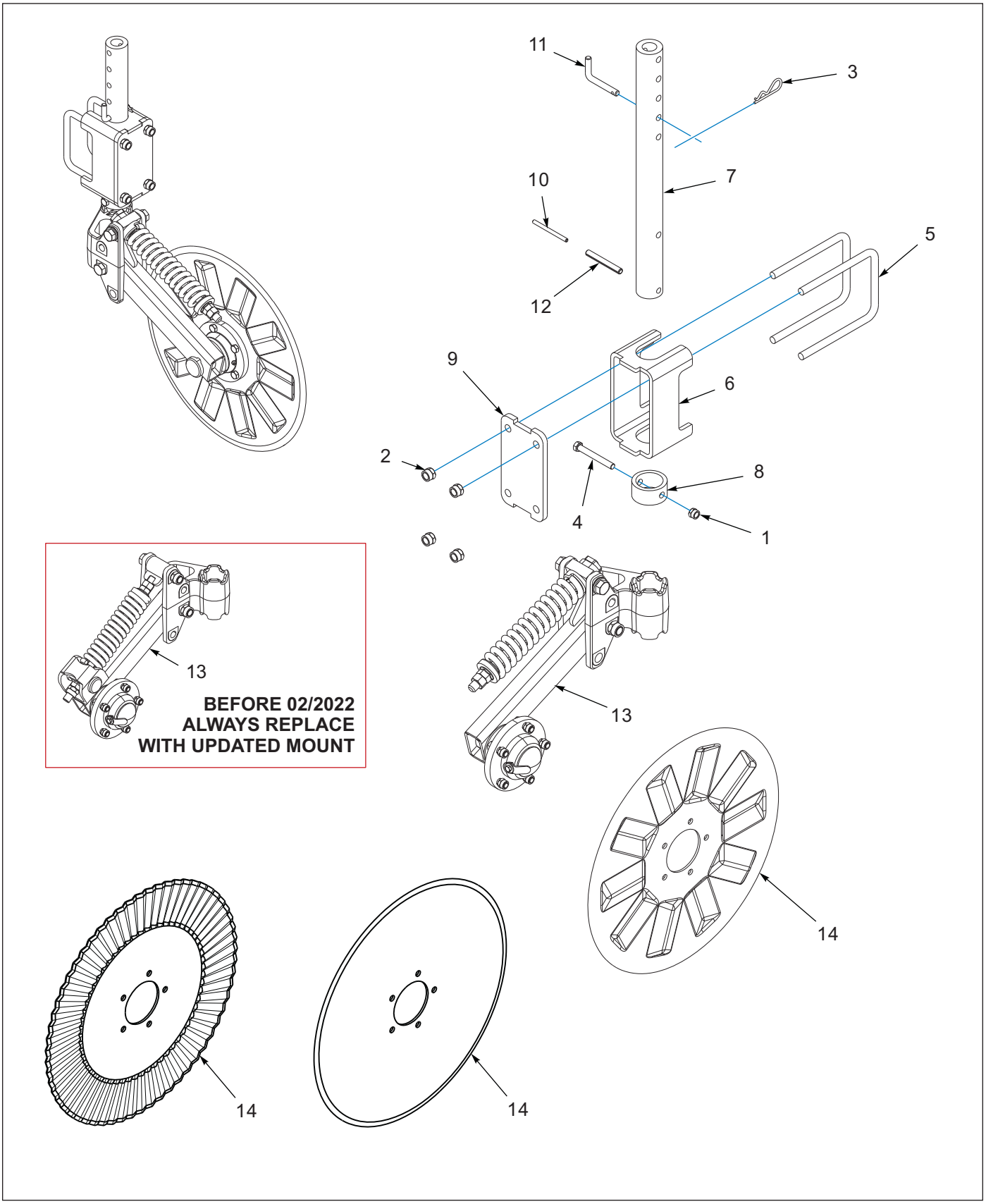

Figure 3-2: Blade Coulter - Straight, Rippled & Pyramid Option (Right Hand)

Blade Coulter - Straight, Rippled & Pyramid Option (Right Hand)

ITEM	PART NUMBER	DESCRIPTION	QTY.
	233874	COULTER-HD, STRAIGHT BLADE, RH **(AFTER 02/2022)**	- -
	233876	COULTER-HD, RIPPLED BLADE, RH **(AFTER 02/2022)**	- -
	233878	COULTER-HD, PYRAMID BLADE, RH **(AFTER 02/2022)**	- -
	176849	22 COULTER HD SMOOTH BLADE RH **(BEFORE 02/2022)**	- -
	176848	22 COULTER HD RIPPLED BLADE RH **(BEFORE 02/2022)**	- -
	181085	22 COULTER HD PYRAMID BLADE RH **(BEFORE 02/2022)**	- -
1	1-512-010005-09	NUT,HEX,SLFLKG, 1/2-13 GRB	1
2	1-512-010005-13	NUT,HEX SLFLKG GRB 5/8-11	4
3	1-557-010013	PIN, HAIR 3/16 DIA	1
4	1-654-010055-13	SCREW,HEX CAP,1/2-13UNCX4 GR5	1
5	149192	U-BOLT,6-11/16 CENTERS X 8-1/2	2
6	179082	COULTER CLAMP TUBE	1
7	179545	COULTER ADJUST TUBE	1
8	179546	COULTER STOP	1
9	179547	CLAMP PLATE	1
10	5D954	ROLL PIN 5/16 X 4	1
11	8-557-010095	PIN RIGID GA WHEEL 800	1
12	8K756	ROLL PIN 1/2 x 4	1
13	233842	MOUNT-COULTER, RH, ASM **(AFTER 02/2022) (SEE PAGE 3-5)**	1
13	182242	COULTER ASSY, HD **(BEFORE 02/2022) (SEE PAGE 3-7)**	1
14	179966	COULTER BLADE 22 PYRAMID	1
14	176846	COULTER 22" SMOOTH	1
14	9K289	22" COULTER	1

Heavy Duty Coulter (AFTER 02/2022)

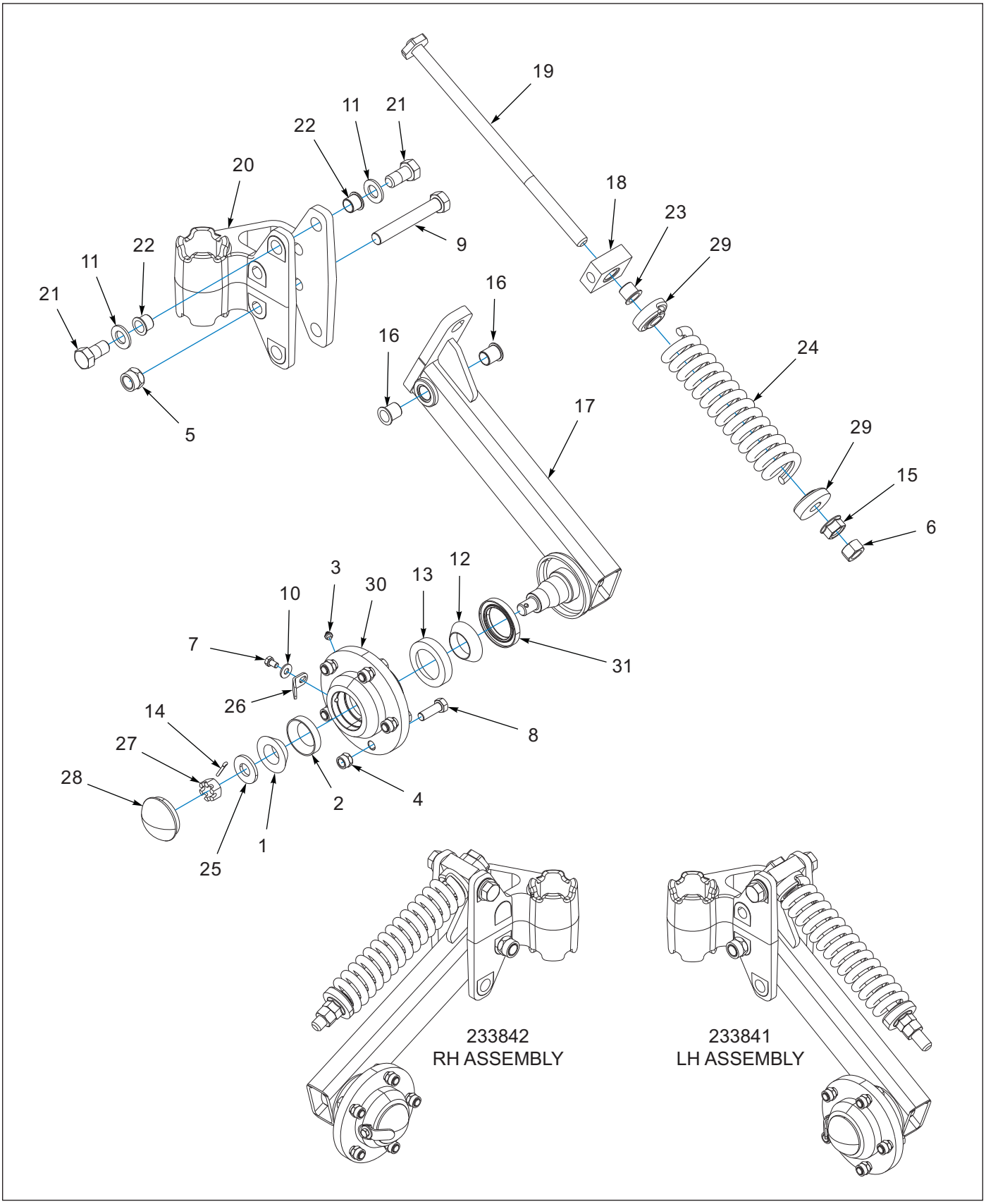

Figure 3-3: Heavy Duty Coulter (AFTER 02/2022)

Heavy Duty Coulter (AFTER 02/2022)

ITEM	PART NUMBER	DESCRIPTION	QTY.
	233841	MOUNT-COULTER, LH, ASSY	- -
	233842	MOUNT-COULTER, RH, ASM	- -
1	1-076-010007	CONE INNER	1
2	1-076-010010	CUP INNER	1
3	1-298-010001-1	ZERK FITTING 1/4 SAE	1
4	1-512-010005-09	NUT,HEX,SLFLKG, 1/2-13 GRB	5
5	1-512-010005-15	NUT,HEX,SLFLKG GRB 3/4-10	1
6	1-512-010007-12	NUT, HEX 3/4-10 GR2 ZP	1
7	1-654-010049-01	SCREW,HEX CAP,5/16-18UNCX1/2	1
8	1-654-010055-03	SCREW,HEX CAP,1/2-13UNCX1-1/2	5
9	1-654-010061-15	SCREW,HX CP 3/4-10UNCX5 GR5	1
10	1-861-010032-09	WASHER, FLAT 5/16 W ZP/CD	1
11	1-861-010032-20	WASHER, FLAT,3/4 N ZP/CD	2
12	102498	BEARING CONE,OUTER, 1.625	1
13	102604	BEARING CUP, OUTER	1
14	110-0344	5/32X1 COTTER PIN	1
15	168226	NUT,HEX FLG 3/4-10, GR8, ZP	1
16	182224	BEARING- IGUS,FLNGD,7/8X3/4X1	2
17	233835	ARM-COULTER, LH, WLDMT	1
17	233836	ARM-COULTER, RH, WLDMT	1
18	233838	BLOCK-PIVOT, SPRING	1
19	233845	ROD-SPRING, WLDMT	1
20	233847	MOUNT-SWIVEL, COULTER, 2512	1
21	233849	SCREW-HEX CAP,3/4-10 UNCX1-1/2	2
22	233850	BEARING-IGUS,FLNGD,QFI-1412-12	2
23	233851	BEARING-IGUS,FLNGD,QFM-2023-21	1
24	233887	SPRING,COMP,12-3/16X2-1/2,K898	1
25	3J397	WASHER 1-3/4ODX13/16IDX3/16THK	1
26	3K613	CAP STRAP	1
27	3/4-16HSN	HEX SLOTTED NUT	1
28	6D337	HUB CAP	1
29	7J569	CAP (6D410)	2
30	9K453	HUB (USES 3K612W HUB BLANK)	1
31	9K454	GREASE SEAL	1

Heavy Duty Coulter (BEFORE 02/2022)

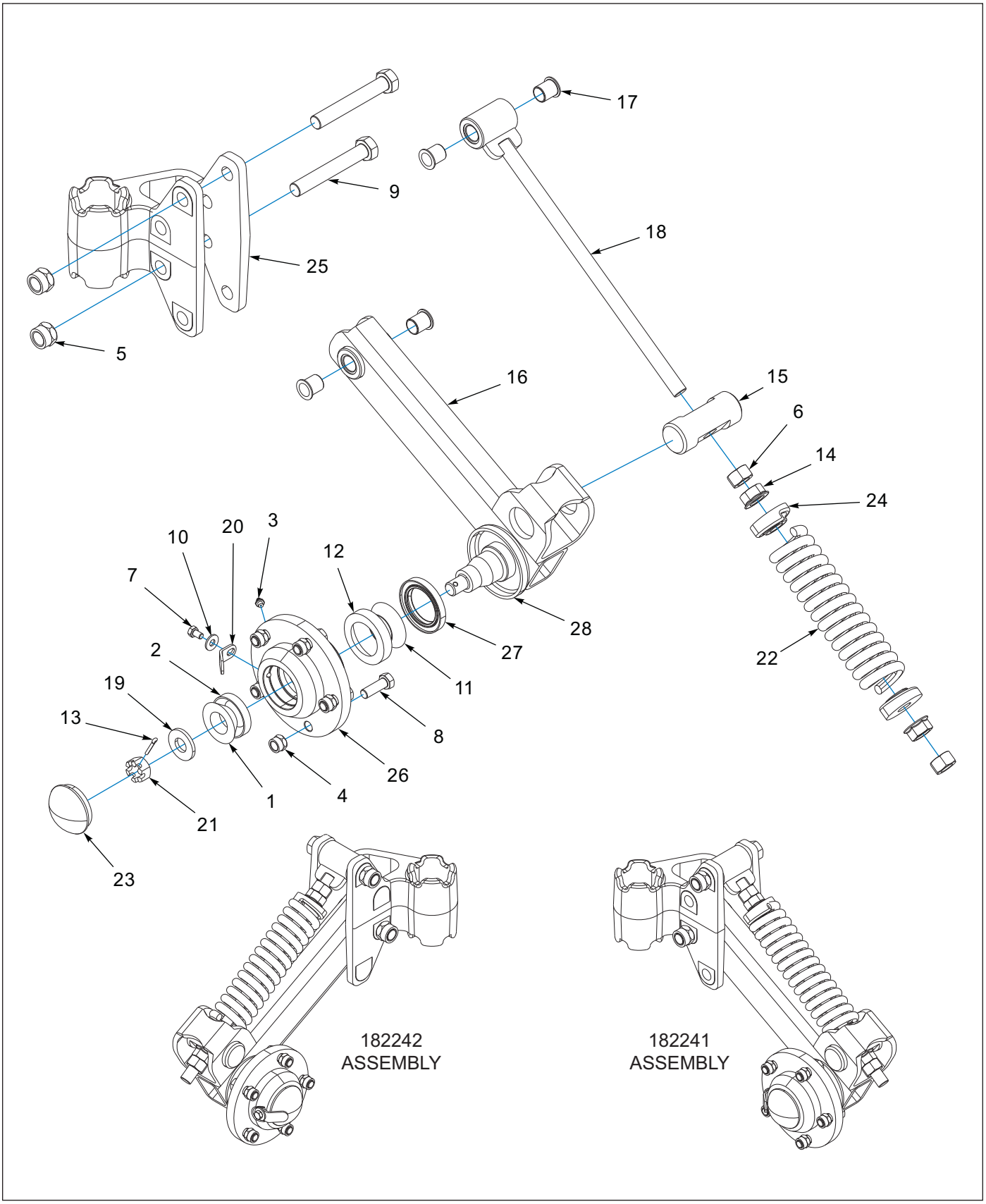

Figure 3-4: Heavy Duty Coulter (BEFORE 02/2022)

Heavy Duty Coulter (BEFORE 02/2022)

ITEM	PART NUMBER	DESCRIPTION	QTY.
	182241	COULTER ASSY, HD	- -
	182242	COULTER ASSY, HD	- -
1	1-076-010007	CONE INNER	1
2	1-076-010010	CUP INNER	1
3	1-298-010001-1	ZERK FITTING 1/4 SAE	1
4	1-512-010005-09	NUT,HEX,SLFLKG, 1/2-13 GRB	5
5	1-512-010005-15	NUT,HEX,SLFLKG GRB 3/4-10	2
6	1-512-010007-12	NUT, HEX 3/4-10 GR2 ZP	2
7	1-654-010049-01	SCREW,HEX CAP,5/16-18UNCX1/2	1
8	1-654-010055-03	SCREW,HEX CAP,1/2-13UNCX1-1/2	5
9	1-654-010061-15	SCREW,HX CP 3/4-10UNCX5 GR5	2
10	1-861-010032-09	WASHER, FLAT 5/16 W ZP/CD	1
11	102498	BEARING CONE,OUTER, 1.625	1
12	102604	BEARING CUP, OUTER	1
13	110-0344	5/32X1 COTTER PIN	1
14	168226	NUT,HEX FLG 3/4-10, GR8, ZP	4
15	182220	PIVOT BOLT	1
16	182222	ARM WLDMT, COULTER, RH	1
16	182225	ARM WLDMT, COULTER, LH	1
17	182224	BEARING- IGUS,FLNGD,7/8X3/4X1	4
18	182233	BOLT - EYE WELDMENT	1
19	3J397	WASHER	1
20	3K613	CAP STRAP	1
21	3/4-16HSN	HEX SLOTTED NUT	1
22	4K076	COMPRESSION SPRING - OUTER	1
23	6D337	HUB CAP	1
24	7J569	CAP (6D410)	2
25	9K295	COULTER SWIVEL	1
26	9K453	HUB	1
27	9K454	GREASE SEAL	1
28	3K608	SHIELD	1

Electrical

Electrical - 3 & 4 Shanks

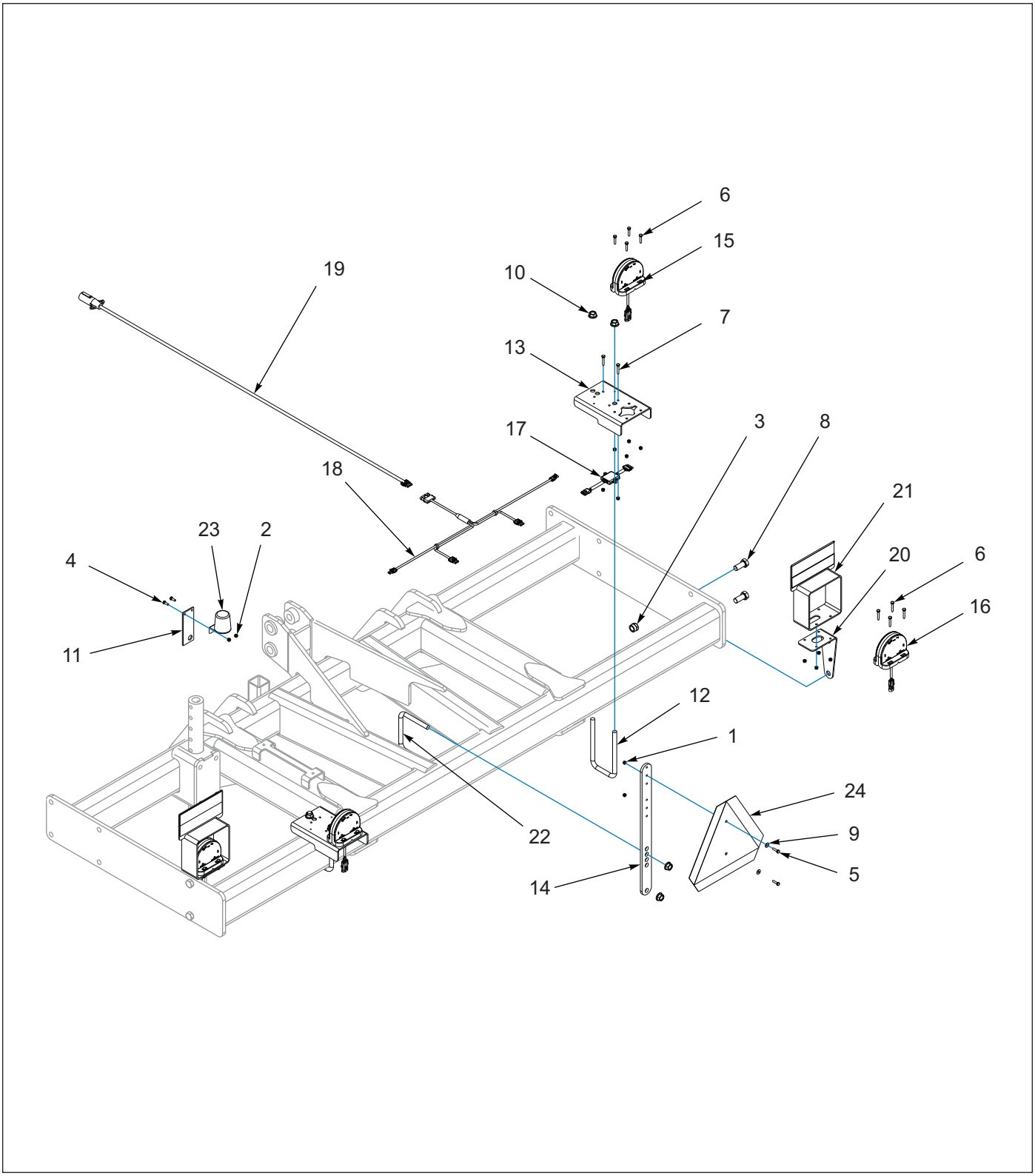

Figure 4-1: Electrical - 3 & 4 Shanks

Electrical - 3 & 4 Shanks

ITEM	PART NUMBER	DESCRIPTION	QTY.
	185205	KIT - WARNING LIGHT	1
1	1-512-010004-05	NUT, HEX, SLFLKG, 1/4-20 UNC, GRA	2
2	1-512-010005-01	NUT, HEX, SLFLKG, 1/4-20 UNC, GRB	20
3	1-512-010005-15	NUT, HEX, SLFLKG 3/4-10 UNC, GRB	4
4	1-654-010047-04	SCREW, HEX, 1/4-20 UNC X 3/4 GR5	2
5	1-654-010047-06	SCREW, HEX, 1/4-20 UNC X 1 GR5	2
6	1-654-010047-07	SCREW, HEX, 1/4-20 UNC X 1-1/4 G5	8
7	1-654-010047-08	SCREW, HEX, 1/4-20 UNC X 1-1/2 GR5	10
8	1-654-010061-04	SCREW, HEX, 3/4-10 UNC X 1-3/4 GR5	4
9	1-861-010032-07	WASHER, FLAT 1/4W, ZP/CD	2
10	100827	NUT, FLANGE HEAD, SERR, 5/8-11 UNC	6
11	101404	BRACKET, STOR-AWAY HOLDER, 2000	1
12	157648	U-BOLT, HYDRAULIC MOUNT	2
13	164138	MOUNT, LIGHT TAIL	2
14	164142	BRACKET, SMV MOUNTING	1
15	174435	LAMP, AG RED, SINGLE LED	2
16	174436	LAMP, AG AMBER, SINGLE LED	2
17	174437	MODULE, AG FLASHER CONTROL	1
18	175151	HARNESS, LED WARNING LIGHTS	1
19	178514	HARNESS, 7 PIN/4PIN WP 10'	1
20	182290	BRACKET, LIGHT MOUNT	2
21	182310	BRACKET, LIGHT MOUNT REFLECTOR	1
22	2-102-010032	U-BOLT, CENTER SHANK MOUNT	1
23	2-368-010287	HARNESS, STOR-A-WAY	1
24	70260977	SMV EMBLEM	1
25	105874	TIE,STRAP PLSTC 21.5-24X.301 **(NOT SHOWN)**	15

Electrical - 5 Shanks

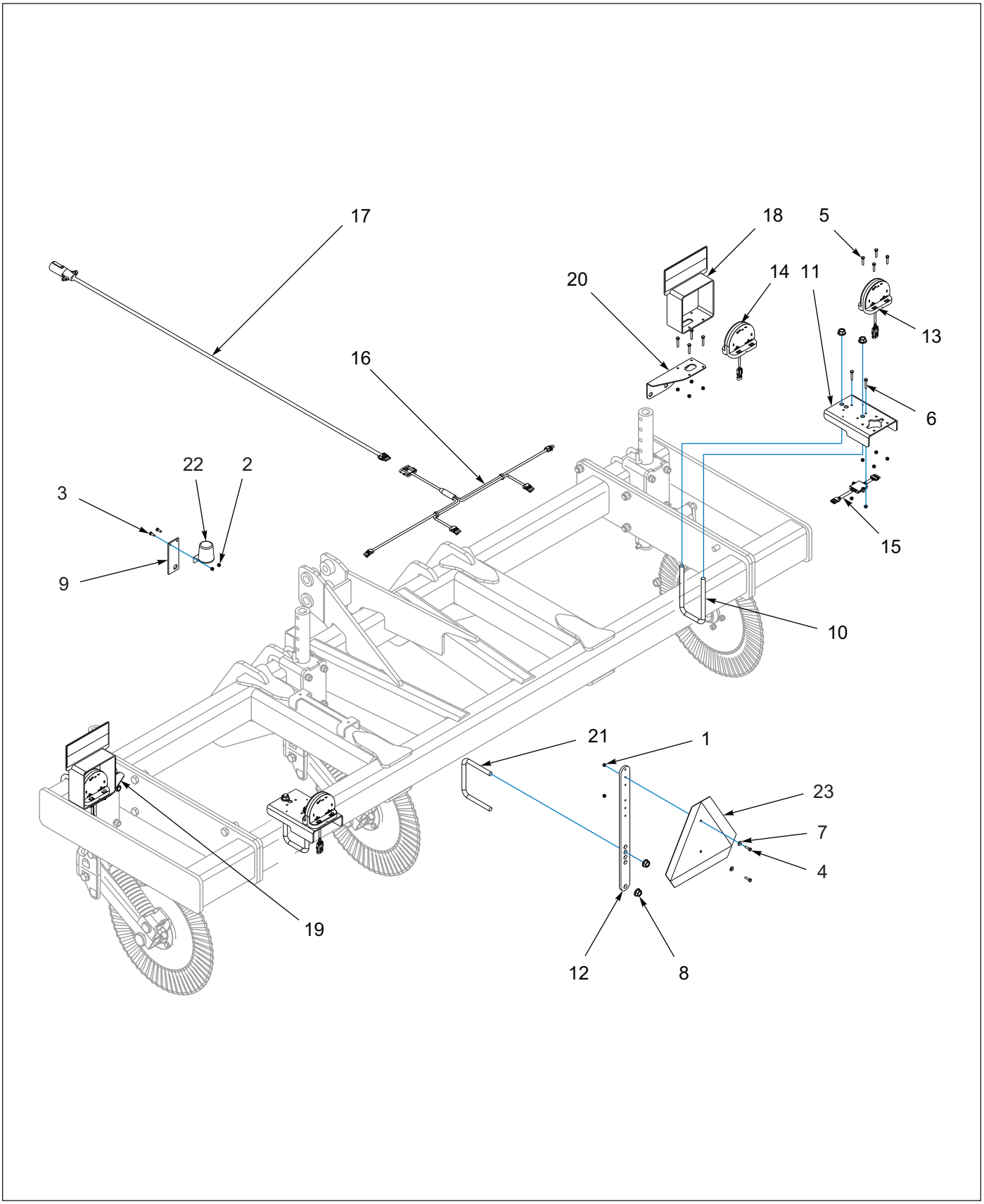

Figure 4-2: Electrical - 5 Shanks

Electrical - 5 Shanks

ITEM	PART NUMBER	DESCRIPTION	QTY.
	185218	KIT - WARNING LIGHT	1
1	1-512-010004-05	NUT, HEX, SLFLKG, 1/4-20 UNC, GRA	2
2	1-512-010005-01	NUT, HEX, SLFLKG, 1/4-20 UNC, GRB	20
3	1-654-010047-04	SCREW, HEX, 1/4-20 UNC X 3/4 GR5	2
4	1-654-010047-06	SCREW, HEX, 1/4-20 UNC X 1 GR5	2
5	1-654-010047-07	SCREW, HEX, 1/4-20 UNC X 1-1/4 G5	8
6	1-654-010047-08	SCREW, HEX, 1/4-20 UNC X 1-1/2 GR5	10
7	1-861-010032-07	WASHER, FLAT 1/4W, ZP/CD	2
8	100827	NUT, FLANGE HEAD, SERR, 5/8-11 UNC	6
9	101404	BRACKET, STOR-AWAY HOLDER, 2000	1
10	157648	U-BOLT, HYDRAULIC MOUNT	2
11	164138	MOUNT, LIGHT TAIL	2
12	164142	BRACKET, SMV MOUNTING	1
13	174435	LAMP, AG RED, SINGLE LED	2
14	174436	LAMP, AG AMBER, SINGLE LED	2
15	174437	MODULE, AG FLASHER CONTROL	1
16	175151	HARNESS, LED WARNING LIGHTS	1
17	178514	HARNESS, 7 PIN/4PIN WP 10'	1
18	182310	BRACKET, LIGHT MOUNT REFLECTOR	1
19	185203	BRACKET - LIGHT MOUNT, LH	1
20	185204	BRACKET - LIGHT MOUNT, RH	1
21	2-102-010032	U-BOLT, CENTER SHANK MOUNT	1
22	2-368-010287	HARNESS, STOR-A-WAY	1
23	70260977	SMV EMBLEM	1
24	105874	TIE,STRAP PLSTC 21.5-24X.301 **(NOT SHOWN)**	15

Finishing Options

Closing Platform (AFTER 04/2024)

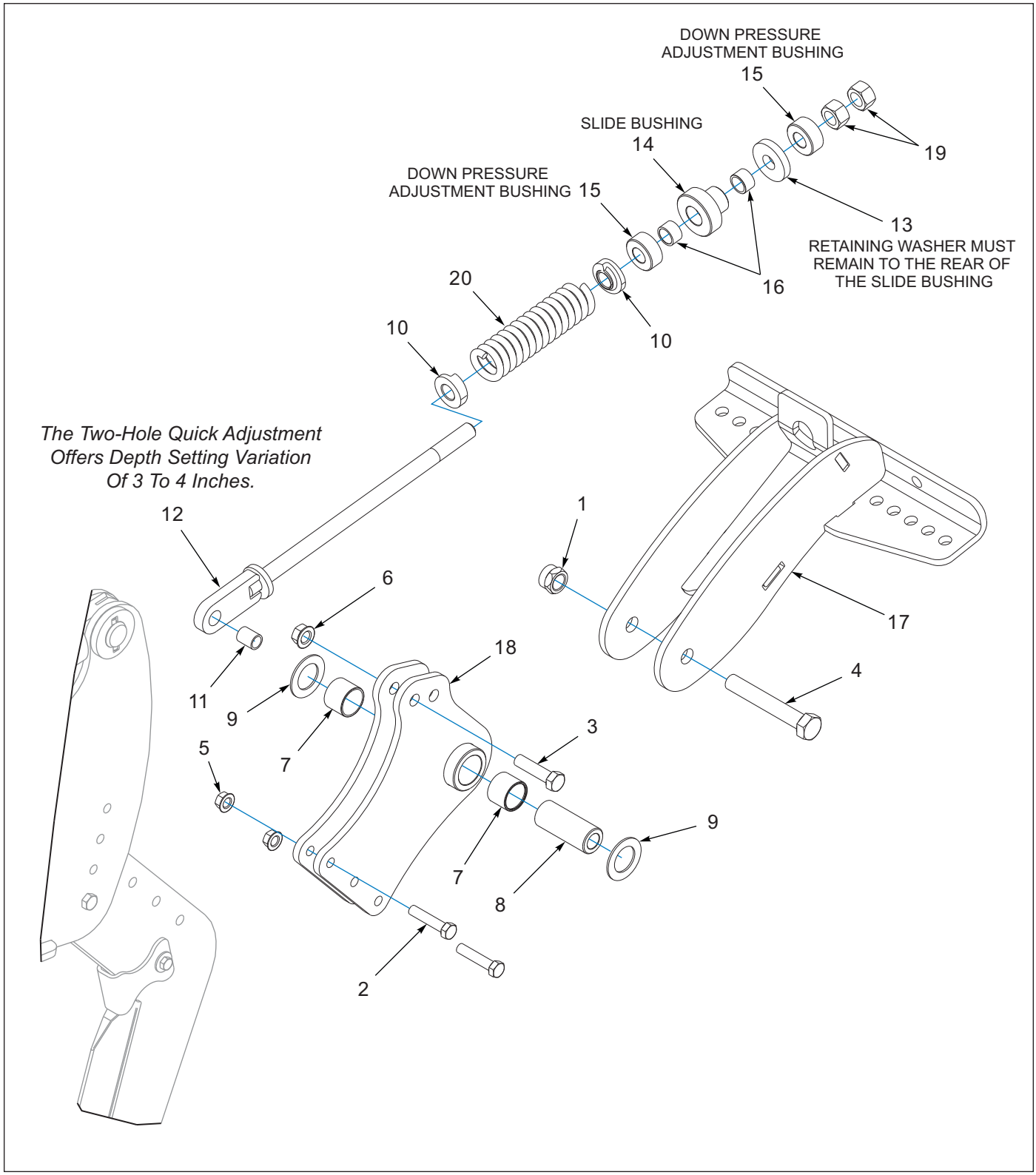

Figure 5-1: Closing Platform (AFTER 04/2024) (1 of 2)

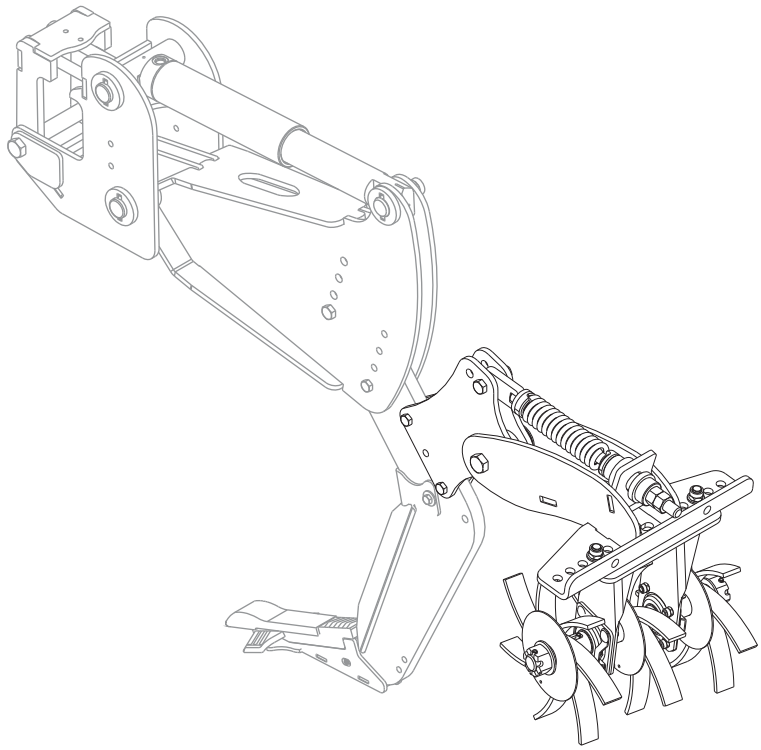

BACK VIEW

Figure 5-2: Closing Platform (AFTER 04/2024) (2 of 2)

Closing Platform (AFTER 04/2024)

ITEM	PART NUMBER	DESCRIPTION	QTY.
	227150	PLATFORM-CLOSING, 2512, ASM **(SHOWN W/ CLOSER WHEEL)**	1
1	1-512-010005-19	NUT 1-8 HEX SLF-LOCKING GRB	1
2	138567	SCREW,HX CP 5/8-11UNCX3-1/2 G8	2
3	1-654-010061-09	SCREW HX CP 3/4-10UNCX3 GR5	1
4	1-654-010125-18	SCREW HEX CAP,1-8UNCX6-1/2GR8	1
5	100827	NUT,FLG HD,SERRATED,5/8-11	2
6	103841	NUT,FLG,LNK,SERRATED 3/4-10UNC	1
7	210879	BEARING-HEF, 2.004X1.76X1-1/2	2
8	227126	BUSHING,1.75 X 1.03 X 4.313	1
9	227132	WASHER-2-7/8X1.78 ID,1/8 UHMW	2
10	227147	PLUG-SPRING, 1-1/16	2
11	227148	TUBE, 1.0 X .782 X 1.250	1
12	227917	BOLT-TENSIONER, WLDMT	1
13	227919	WASHER, 1.03 X 2.75 X 0.5	1
14	227921	BUSHING-SLIDE, BASE	1
15	227922	BUSHING, 2-1/4 X 1-1/32 X 1	2
16	227925	BUSHING, IGUS, MSM-2734-20	2
17	239291	PLATFORM-MOUNT,CLOSER,WELDMENT	1
18	239293	PIVOT-SPRING MOUNT, WELDMENT	1
19	61D16ER	NUT, HEX 1-8UNC GR5 ZP	2
20	6J460	COMPRESSION SPRING	1

Closing Platform (02/2022 TO 04/2024)

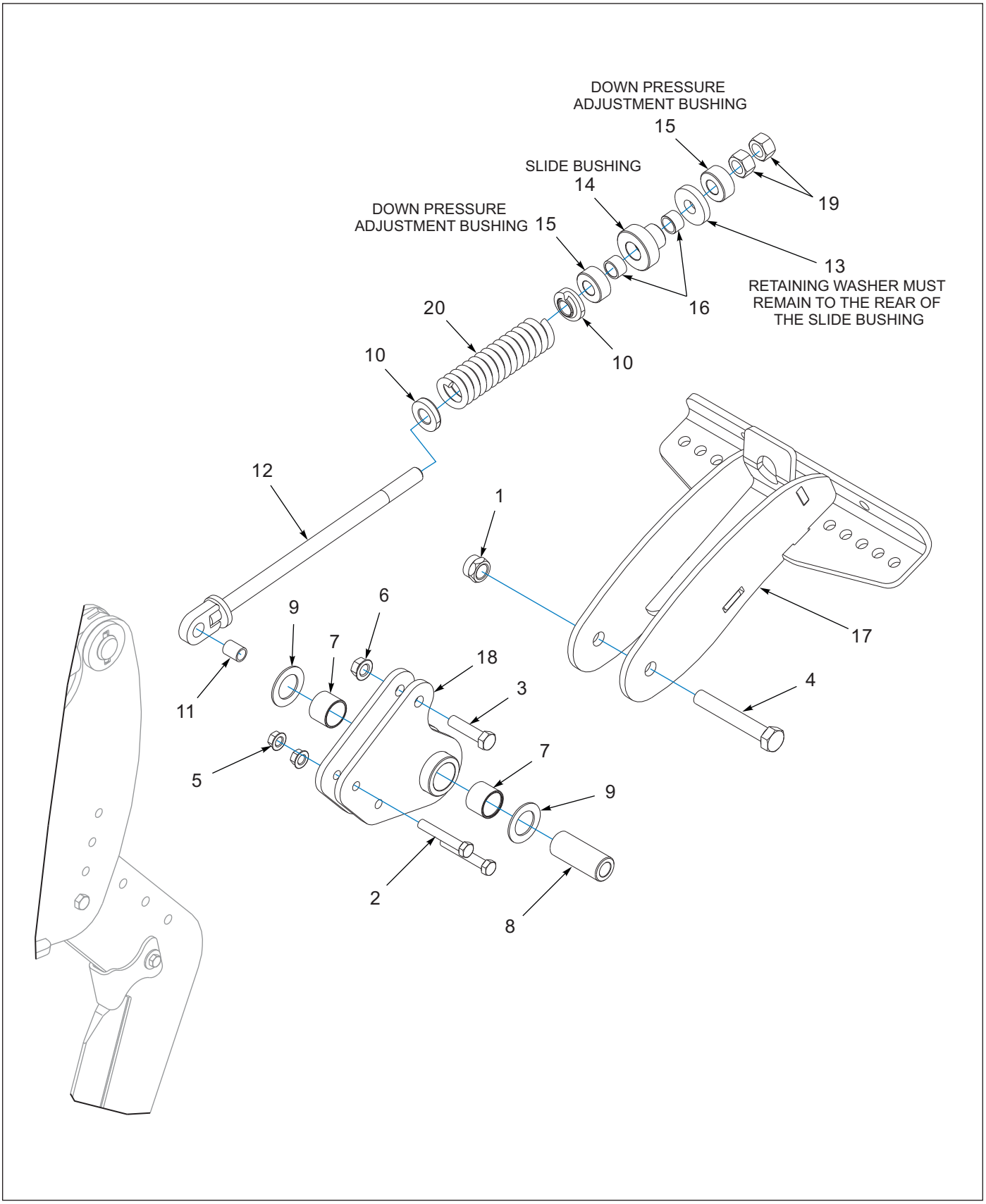

Figure 5-3: Closing Platform (02/2022 TO 04/2024) (1 of 2)

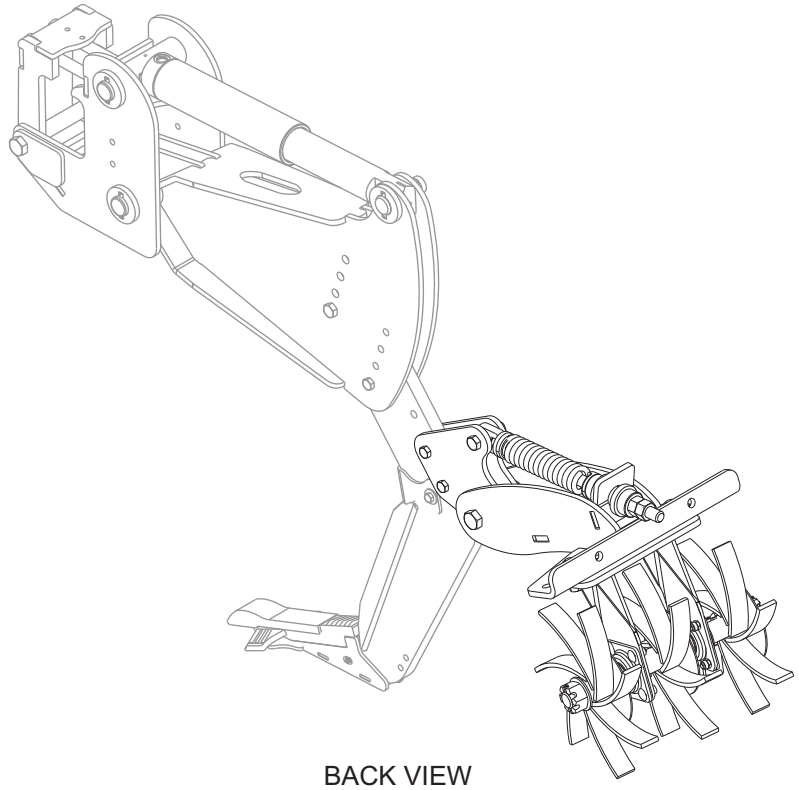

Figure 5-4: Closing Platform (02/2022 TO 04/2024) (2 of 2)

Closing Platform (02/2022 TO 04/2024)

ITEM	PART NUMBER	DESCRIPTION	QTY.
	227150	PLATFORM-CLOSING, 2512, ASM **(SHOWN W/ CLOSER WHEEL)**	1
1	1-512-010005-19	NUT 1-8 HEX SLF-LOCKING GRB	1
2	172829	SCREW HX CP 5/8-11X4 GR8	2
3	1-654-010061-09	SCREW HX CP 3/4-10UNCX3 GR5	1
4	1-654-010125-18	SCREW HEX CAP,1-8UNCX6-1/2GR8	1
5	100827	NUT,FLG HD,SERRATED,5/8-11	2
6	103841	NUT,FLG,LNK,SERRATED 3/4-10UNC	1
7	210879	BEARING-HEF, 2.004X1.76X1-1/2	2
8	227126	BUSHING,1.75 X 1.03 X 4.313	1
9	227132	WASHER-2-7/8X1.78 ID,1/8 UHMW	2
10	227147	PLUG-SPRING, 1-1/16	2
11	227148	TUBE, 1.0 X .782 X 1.250	1
12	227917	BOLT-TENSIONER, WLDMT	1
13	227919	WASHER, 1.03 X 2.75 X 0.5	1
14	227921	BUSHING-SLIDE, BASE	1
15	227922	BUSHING, 2-1/4 X 1-1/32 X 1	2
16	227925	BUSHING, IGUS, MSM-2734-20	2
17	239291	PLATFORM-MOUNT,CLOSER,WELDMENT	1
18	239293	PIVOT-SPRING MOUNT, WELDMENT	1
19	61D16ER	NUT, HEX 1-8UNC GR5 ZP	2
20	6J460	COMPRESSION SPRING	1

Closing Platform (BEFORE 02/2022)

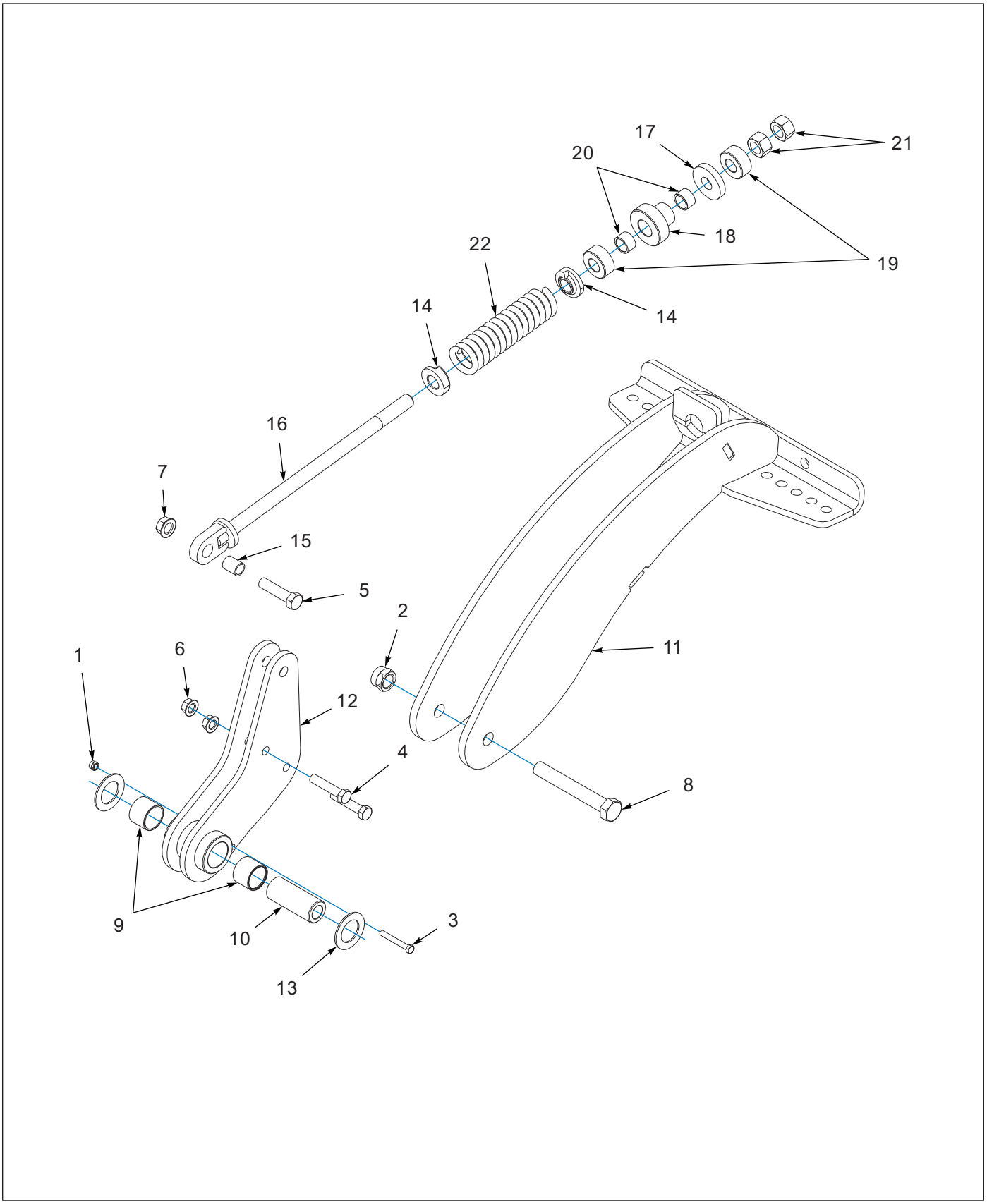

Figure 5-5: Closing Platform (BEFORE 02/2022) (1 of 2)

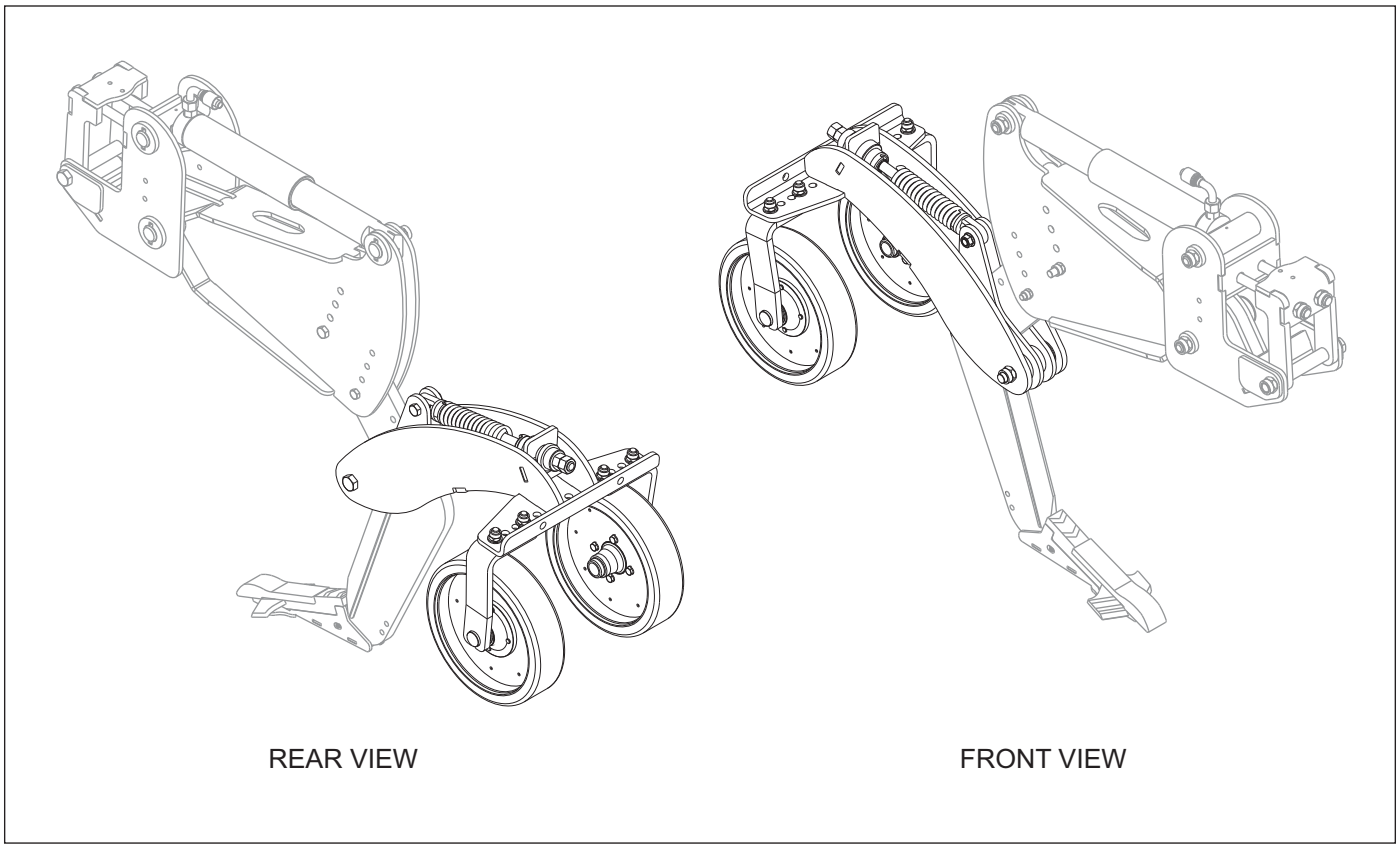

Figure 5-6: Closing Platform (BEFORE 02/2022) (2 of 2)

Closing Platform (BEFORE 02/2022)

ITEM	PART NUMBER	DESCRIPTION	QTY.
	227150	PLATFORM-CLOSING, 2512, ASM **(SHOWN W/ CLOSER WHEEL)**	1
1	1-512-010005-05	NUT, HEX, SLFLKG GRB 3/8-16	1
2	1-512-010005-19	NUT 1-8 HEX SLF-LOCKING GRB	1
3	1-654-010051-12	SCREW,HEX CAP,3/8-16UNCX2-3/4	1
4	1-654-010059-09	SCREW 5/8-11UNCX3 HX CP GR5	2
5	1-654-010061-09	SCREW HX CP 3/4-10UNCX3 GR5	1
6	100827	NUT,FLG HD,SERRATED,5/8-11	2
7	103841	NUT,FLG,LNK,SERRATED 3/4-10UNC	1
8	122767	SCREW,HEX CAP 1-8UNCX7 GR8	1
9	210879	BEARING-HEF, 2.004X1.76X1-1/2	2
10	227126	BUSHING,1.75 X 1.03 X 4.313	1
11	227127	FRAME-WHEEL MOUNT, WLDMT	1
12	227129	PIVOT-CLOSER MOUNT, WLDMT	1
13	227132	WASHER-2-7/8X1.78 ID,1/8 UHMW	2
14	227147	PLUG-SPRING, 1-1/16	2
15	227148	TUBE, 1.0 X .782 X 1.250	1
16	227917	BOLT-TENSIONER, WLDMT	1
17	227919	WASHER, 1.03 X 2.75 X 0.5	1
18	227921	BUSHING-SLIDE, BASE	1
19	227922	BUSHING, 2-1/4 X 1-1/32 X 1	2
20	227925	BUSHING, IGUS, MSM-2734-20	2
21	61D16ER	NUT, HEX 1-8UNC GR5 ZP	2
22	6J460	COMPRESSION SPRING	1

Closer Wheel

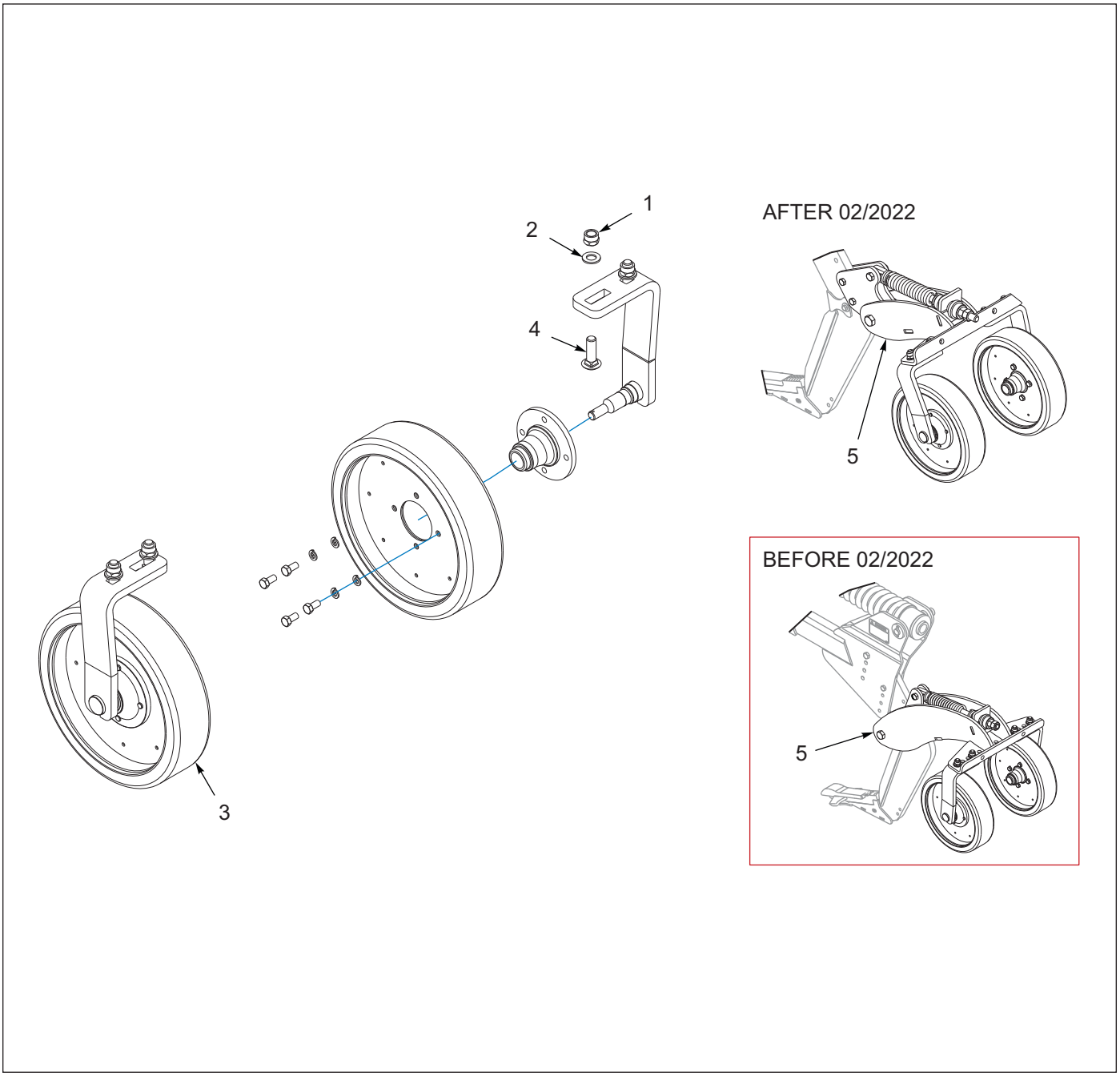

Figure 5-7: Closer Wheel

Closer Wheel

ITEM	PART NUMBER	DESCRIPTION	QTY.
	227228	CLOSER-WHEEL, RIPPER, ASSY	1
1	1-512-010005-15	NUT,HEX,SLFLKG GRB 3/4-10	4
2	1-861-010032-20	WASHER, FLAT,3/4 N ZP/CD	4
3	182257	WHEEL-CLOSING ASSEMBLY	2
4	3/4-10X2-1/2CB	SCREW,RDH SQNK 3/4-10X2-1/2	4
5	227150	PLATFORM-CLOSING, 2512, ASM **(SEE PAGE 5-1)** **(ALWAYS REPLACE W/ "AFTER 02/2022" CLOSING PLATFORM)**	1

Flat Bar Basket - 20"

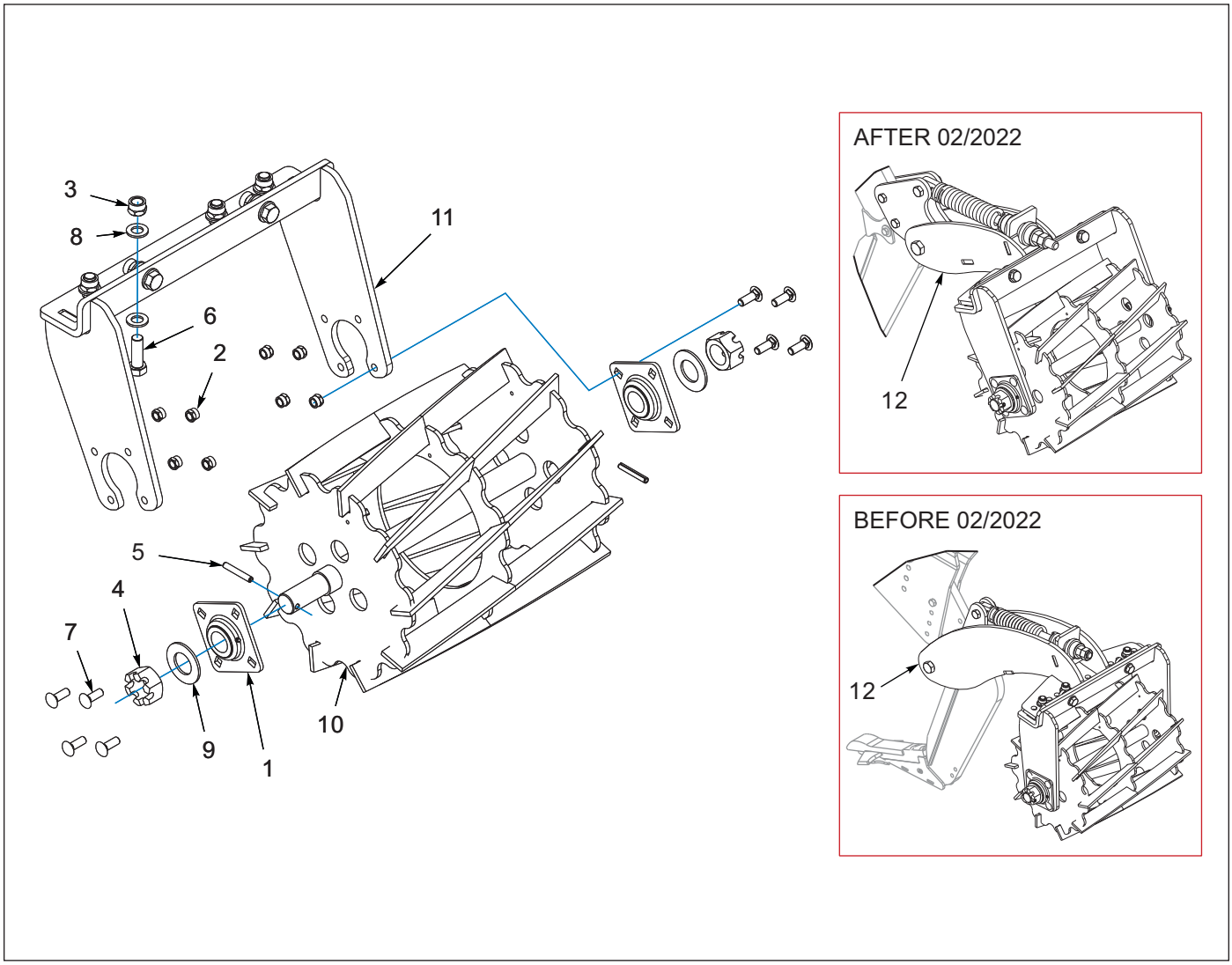

Figure 5-8: Flat Bar Basket - 20"

Flat Bar Basket - 20"

ITEM	PART NUMBER	DESCRIPTION	QTY.
	227232	BASKET-FLAT BAR, 20 INCH, ASSY	1
1	1-065-010011	BEARING FLANGED 1-1/2ID	2
2	1-512-010005-09	NUT,HEX,SLFLKG, 1/2-13 GRB	8
3	1-512-010005-15	NUT,HEX,SLFLKG GRB 3/4-10	6
4	1-516-010001-27	NUT,HX SLOT 1-1/2-6 ZP	2
5	1-647-010004240	PIN,SPRING,SLOTTED 5/16X2-1/2	2
6	1-654-010061-06	SCREW,HXCP,3/4-10UNCX2-1/4GR5	6
7	1-654-010070-03	SCREW RDHD SQNK1/2-13X1-1/2	8
8	1-861-010032-20	WASHER, FLAT,3/4 N ZP/CD	12
9	1-861-010032-32	WASHER FLAT ZP/CD 1-1/2	2
10	227225	REEL-FLAT BAR, WLDMT	1
11	227231	FRAME-MOUNT,REEL, WLDMT	1
12	227150	PLATFORM-CLOSING, 2512, ASM **(SEE PAGE 5-1)**	1
		(ALWAYS REPLACE W/ "AFTER 02/2022" CLOSING PLATFORM)	

Closer Disc

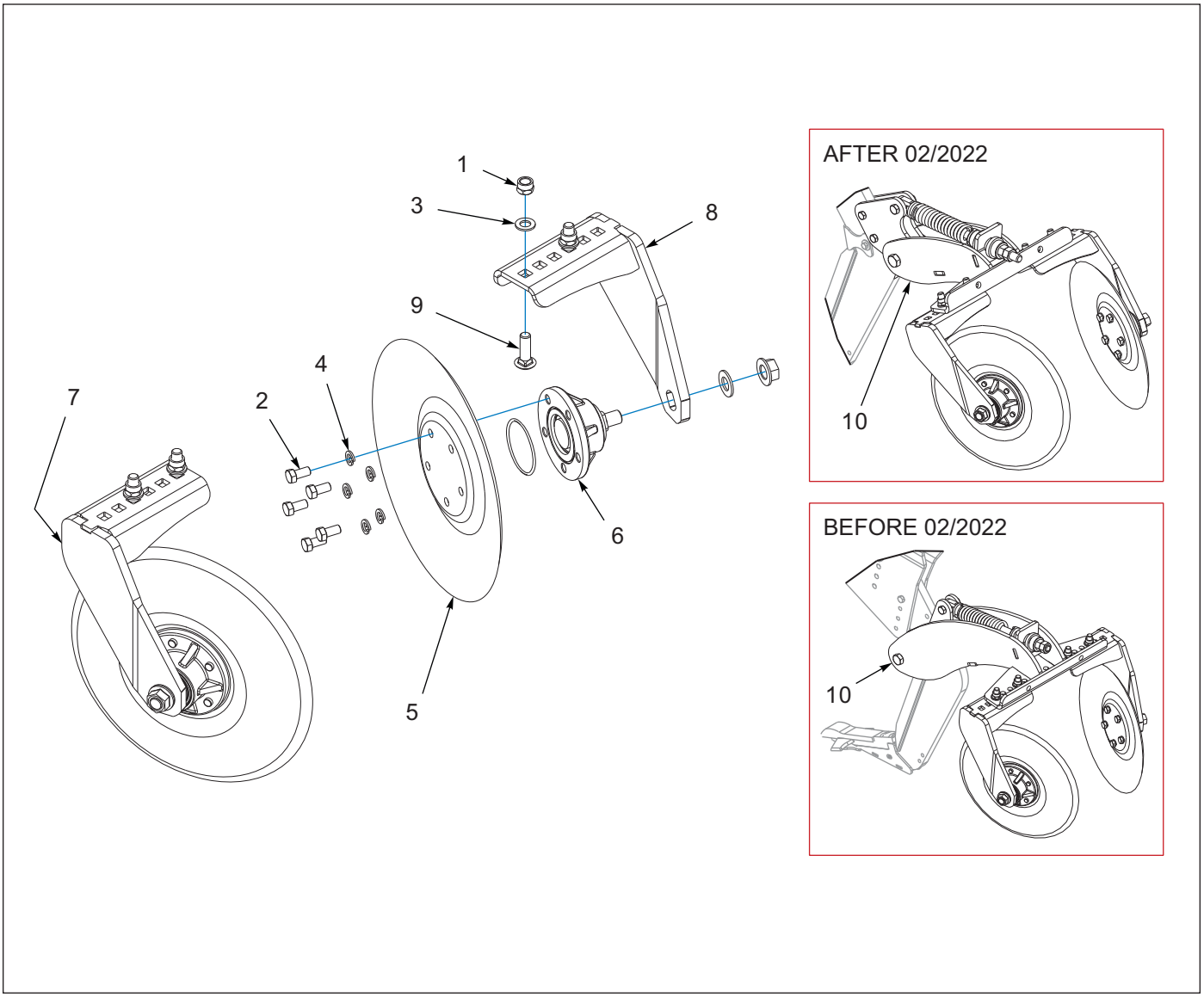

Figure 5-9: Closer Disc

Closer Disc

ITEM	PART NUMBER	DESCRIPTION	QTY.
	227236	CLOSER-DISC, RIPPER, ASSY	1
1	1-512-010005-15	NUT,HEX,SLFLKG GRB 3/4-10	4
2	1-654-010059-02	SCREW,HEX CAP,5/8-11X1-1/4GR5	10
3	1-861-010032-20	WASHER, FLAT,3/4 N ZP/CD	4
4	1-861-010034-15	WASHER,LKG,HLCL SPR,5/8	10
5	201244	DISC-BLADE, 20 INCH, SMOOTH	2
6	210880	KIT-HSL DISC HUB	2
7	227170	SHANK-LH, WLDMT	1
8	227173	SHANK-RH,WLDMT	1
9	3/4-10X2-1/2CB	SCREW,RDH SQNK 3/4-10X2-1/2	4
10	227150	PLATFORM-CLOSING, 2512, ASM **(SEE PAGE 5-1)**	1
		(ALWAYS REPLACE W/ "AFTER 02/2022" CLOSING PLATFORM)	

Crumbler Reel

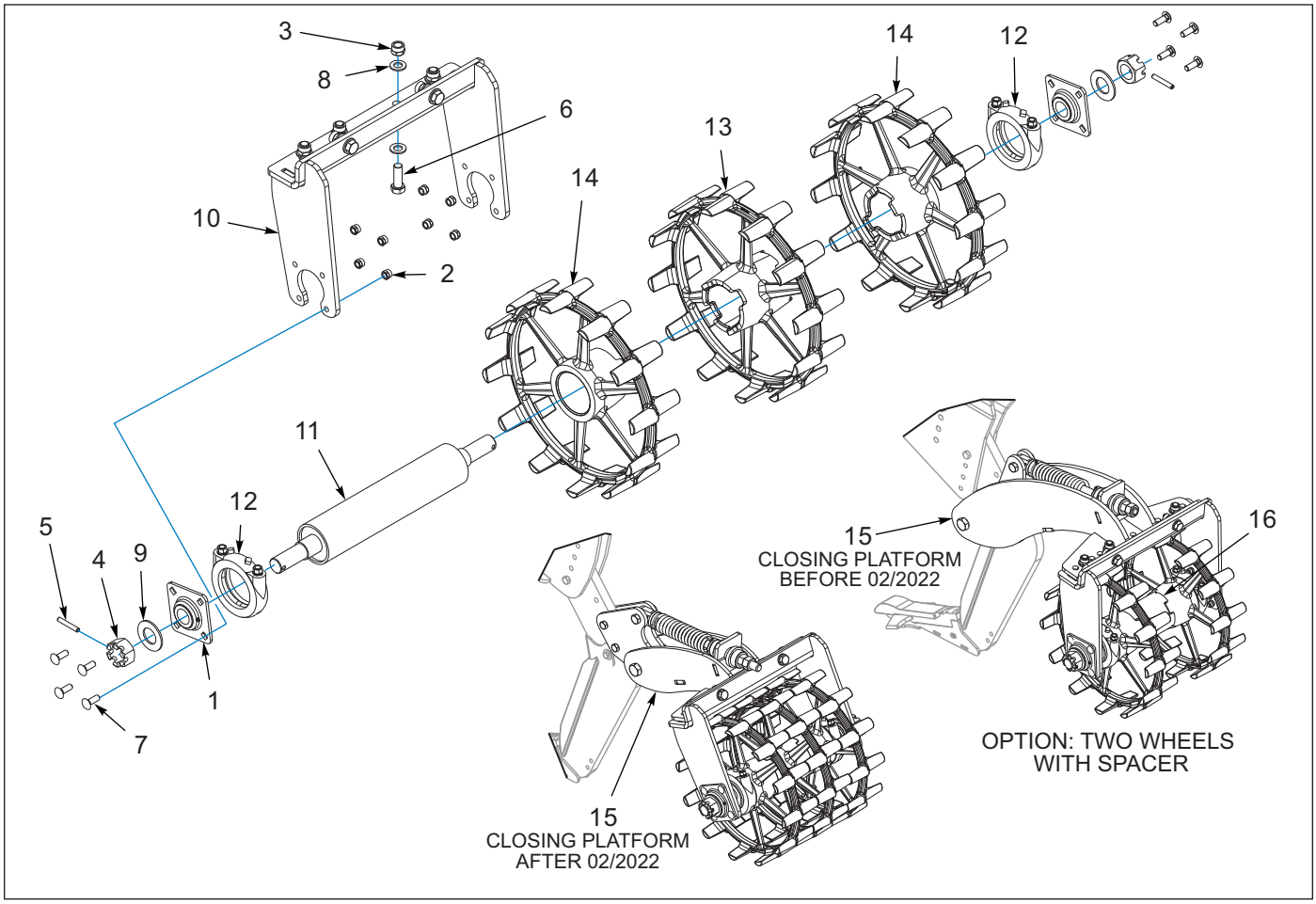

Figure 5-10: Crumbler Reel

Crumbler Reel

ITEM	PART NUMBER	DESCRIPTION	QTY.
	227237	REEL-CRUMBLER, ASSY	1
1	1-065-010011	BEARING FLANGED 1-1/2ID	2
2	1-512-010005-09	NUT,HEX,SLFLKG, 1/2-13 GRB	8
3	1-512-010005-15	NUT,HEX,SLFLKG GRB 3/4-10	6
4	1-516-010001-27	NUT,HX, SLOT 1-1/2-6 ZP	2
5	1-647-010004240	PIN,SPRING,SLOTTED 5/16X2-1/2	2
6	1-654-010061-06	SCREW,HXCP,3/4-10UNCX2-1/4GR5	6
7	1-654-010070-03	SCREW RDHD SQNK1/2-13X1-1/2	8
8	1-861-010032-20	WASHER, FLAT,3/4 N ZP/CD	12
9	1-861-010032-32	WASHER FLAT ZP/CD 1-1/2	2
10	227231	FRAME-MOUNT, REEL, WLDMT	1
11	227235	AXLE-PACKER, WLDMT	1
12	5J375	AXLE CLAMP ASSY	2
13	6K351	OPTIMIZER WHEEL (7006286) 4"	1
14	6K352	OPTIMIZER END WHEEL (7006287)	2
15	227150	PLATFORM-CLOSING, 2512, ASM **(SEE PAGE 5-1)** **(ALWAYS REPLACE W/ "AFTER 02/2022" CLOSING PLATFORM)**	1
16	230839	TUBE-SPACER, CRUMBLER	1

Packer Reel

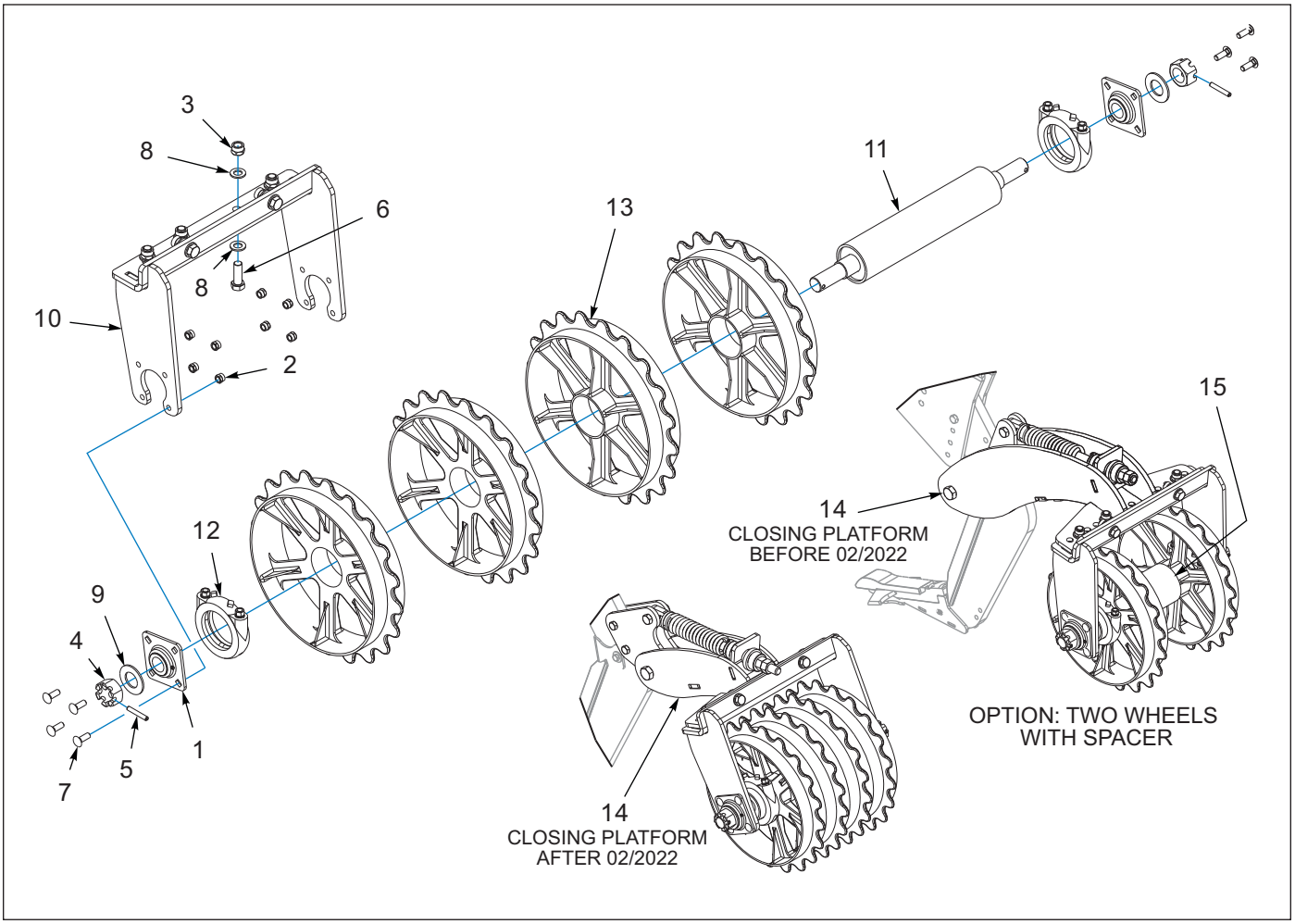

Figure 5-11: Packer Reel

Packer Reel

ITEM	PART NUMBER	DESCRIPTION	QTY.
	227242	REEL-PACKER, ASSY	1
1	1-065-010011	BEARING FLANGED 1-1/2ID	2
2	1-512-010005-09	NUT,HEX,SLFLKG, 1/2-13 GRB	8
3	1-512-010005-15	NUT,HEX,SLFLKG GRB 3/4-10	6
4	1-516-010001-27	NUT, HX SLOT 1-1/2-6 ZP	2
5	1-647-010004240	PIN,SPRING,SLOTTED 5/16X2-1/2	2
6	1-654-010061-06	SCREW,HXCP,3/4-10UNCX2-1/4GR5	6
7	1-654-010070-03	SCREW RDHD SQNK1/2-13X1-1/2	8
8	1-861-010032-20	WASHER, FLAT,3/4 N ZP/CD	12
9	1-861-010032-32	WASHER FLAT ZP/CD 1-1/2	2
10	227231	FRAME-MOUNT, REEL, WLDMT	1
11	227235	AXLE-PACKER, WLDMT	1
12	5J375	AXLE CLAMP ASSY	2
13	9J500	20" DUCTILE END WHEEL 700458	4
14	227150	PLATFORM-CLOSING, 2512, ASM **(SEE PAGE 5-1)** **(ALWAYS REPLACE W/ "AFTER 02/2022" CLOSING PLATFORM)**	1
15	230841	TUBE-SPACER, PACKER	1

Treader

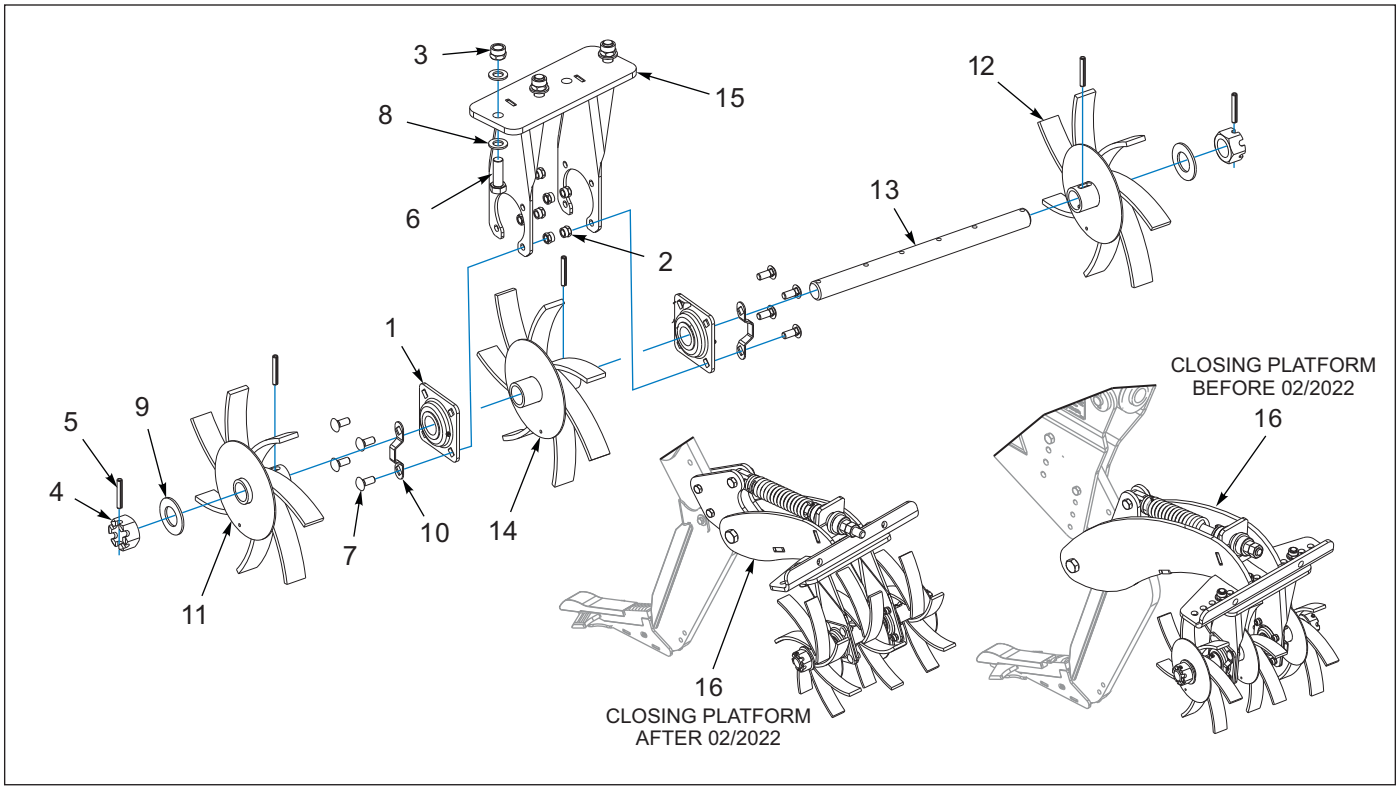

Figure 5-12: Treader

Treader

ITEM	PART NUMBER	DESCRIPTION	QTY.	
	224789	TREADER-LH, 2512, ASSY **(LEFT HAND)**	1	- -
	224790	TREADER-RH, 2512, ASSY **(RIGHT HAND)**	- -	1
1	1-065-010011	BEARING FLANGED 1-1/2ID	2	2
2	1-512-010005-09	NUT,HEX,SLFLKG, 1/2-13 GRB	8	8
3	1-512-010005-15	NUT,HEX,SLFLKG GRB 3/4-10	3	4
4	1-516-010001-27	NUT,HX SLOT 1-1/2-6 ZP	2	2
5	1-647-010004257	PIN,SPRING,SLOTTED 3/8X2-1/2	5	5
6	1-654-010061-06	SCREW,HXCP,3/4-10UNCX2-1/4GR5	3	4
7	1-654-010070-02	SCREW 1/2-13X1-1/4 RD HD SQNK	8	8
8	1-861-010032-20	WASHER, FLAT,3/4 N ZP/CD	7	8
9	1-861-010032-32	WASHER FLAT ZP/CD 1-1/2	2	2
10	206790	PLATE, BEARING ZERK SHIELD	2	2
11	217077	WLDMT,Ø 16" 7 TOOTH, LH FLAT	1	- -
11	217082	WLDMT,Ø 16" 7 TOOTH, RH FLAT	- -	1
12	217079	WLDMT,Ø 16" 7 TOOTH, LH FLAT	1	- -
12	217084	WLDMT,Ø 16" 7 TOOTH, RH FLAT	- -	1
13	227163	SHAFT-TREADER, 3 WHEEL GANG	1	1
14	227175	TREADER-16" 7 TOOTH, LH, WLDMT	1	- -
14	227176	TREADER-16" 7 TOOTH, RH, WLDMT	- -	1
15	227179	HANGER-BEARING, LH, WLDMT	1	- -
15	227180	HANGER-BEARING, RH, WLDMT	- -	1
16	227150	PLATFORM-CLOSING, 2512, ASM **(SEE PAGE 5-1)**	1	1
		(ALWAYS REPLACE W/ "AFTER 02/2022" CLOSING PLATFORM)		

Decals

Decals

ITEM 1 - 1-573-010017

ITEM 2 - 1-573-010096

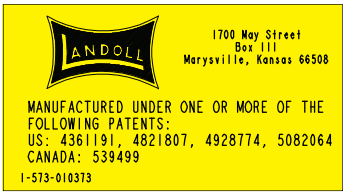

ITEM 3 - 1-573-010373

ITEM 4 - 6K800

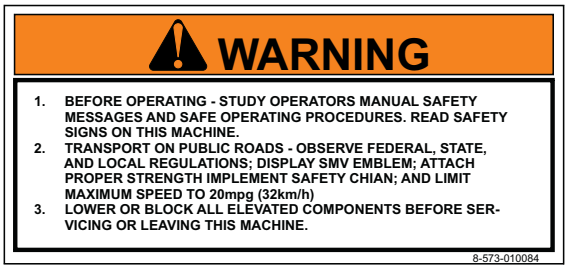

ITEM 7 - 8-573-010084

ITEM 13 - 170510

ITEM 5
2-573-010198

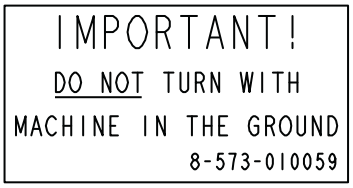

ITEM 6 - 8-573-010059

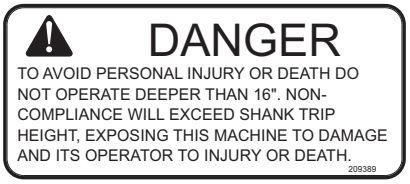

ITEM 11 - 209389

ITEM 10 - 232182

ITEM 8 - 207142

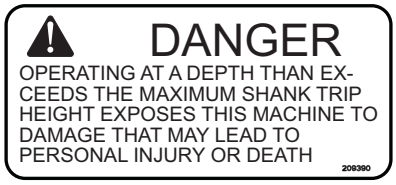

ITEM 12 - 209390

ITEM 9 - 2-573-010469

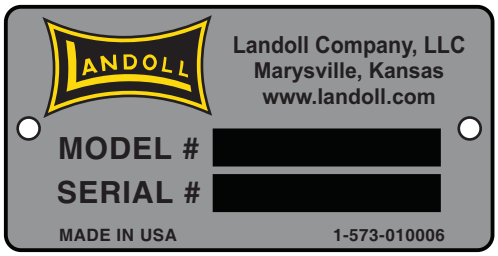

ITEM 14 - 1-573-010006

Figure 6-1: Decals

Decals

ITEM	PART NUMBER	DESCRIPTION	QTY.
1	1-573-010017	DECAL, LANDOLL (WHITE)	2
2	1-573-010096	DECAL, DANGER NO RIDERS	1
3	1-573-010373	DECAL, PATENT TILLAGE	1
4	6K800	DECAL - ZONE COMMANDER	2
5	2-573-010198	DECAL, MEMBER FEMA	1
6	8-573-010059	DECAL, IMPORTANT, NO TURNING	1
7	8-573-010084	DECAL, WARNING BEFORE OPERATING	1
8	207142	DECAL, DANGER STUCK SHANK **(SEE PAGE 1-5)**	REF
9	2-573-010469	DECAL, DANGER SPRING **(SEE PAGE 1-5)**	REF
10	232182	DECAL, QR CODE 2500 SERIES	1
11	209389	DECAL-DANGER, 16 IN DEPTH	2
12	209390	DECAL-DANGER, OPERATING DEPTH	2
13	170510	DECAL,BRILLION LANDOLL	2
14	1-573-010006	PLACARD, NAME	1
15	156010	RIVET, BLIND .156 X 1/2 GRIP **(HARDWARE FOR ITEM 14)**	2

Decal Locations

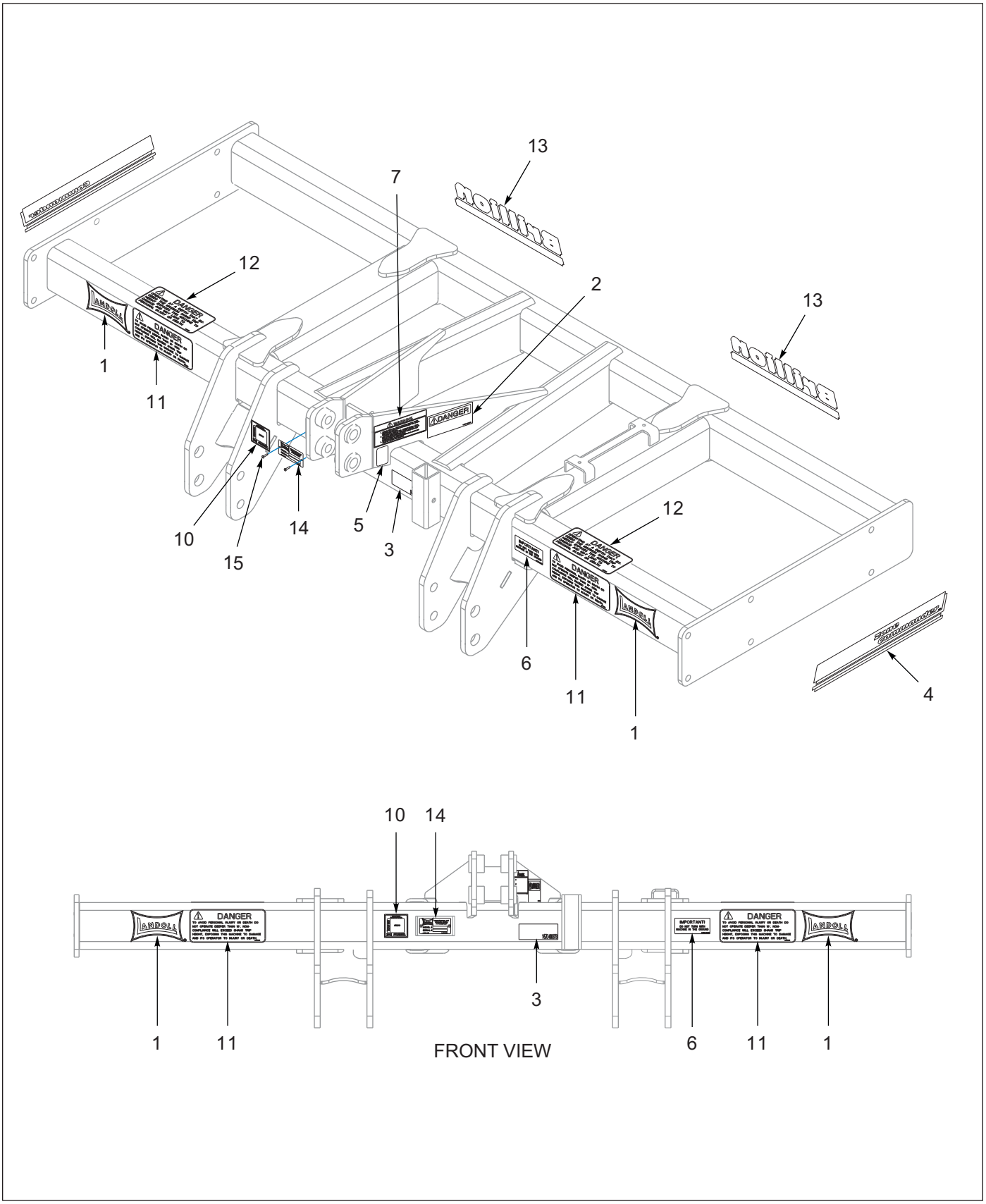

Figure 6-2: Decal Locations

Chapter 7

Glossary

For clarity this glossary of industry standard abbreviations and their definitions are provided.

A

ASM . . . . . .Assembly

B

BATT . . . . . .Battery
BHSC . . . . . .Button Head Socket Cap
BLK . . . . . Black

C

CB . . . . . .Carriage Bolt
CONN . . . . . Connector
CRG . . . . . Carriage
CTSK . . . . . Countersunk
CTWT . . . . . .Counterweight
CVR . . . . . .Cover
CYD . . . . . .Cylinder

D

DBL . . . . . .Double
DIA . . . . . Diameter

E

ENCLSD . . . . . Enclosed

F

FHCS . . . . . .Flanged Head Cap Screw
FHHCS . . . . . Flanged Hex Head Cap Screw
FL OR **FLG** . . . . . Flange
FLT . . . . . Flat

G

GA . . . . . Gauge

H

HHCS . . . . . .Hex Head Cap Screw
HCS . . . . . High Carbon Steel
HD . . . . . .Head
HLCL . . . . . .Helical
HCSKT . . . . . .Hex Socket
HSFC . . . . . .Hex Socket Flat Countersunk
HYD . . . . . Hydraulic

I

ID . . . . . Inside Diameter

L

LH . . . . . Lefthand
LKG OR **LOCK** . . . . . .Locking
LWR . . . . . Lower

M

MANF . . . . . Manifold
MNT . . . . . Mount

N

NRW . . . . . Narrow
- - - - - . . . . . .Not Serviced Separately

O

OD . . . . . Outside Diameter
OHG . . . . . .Overhead Guard
ORFS OR **ORS** . . . . . O-Ring Seal
ORP OR **ORB** . . . . . .O-Ring Boss

P

P-STEER . . . . . .Power Steering
PTFE . . . . . Polytetrafluoroethylene (Teflon)

R

RH . . . . . Righthand
RND . . . . . Round

S

SER . . . . . Series
SHCS . . . . . .Socket Head Cap Screw
SHLD . . . . . Shield
SKT . . . . . .Socket
SLFLKG . . . . . Selflocking
SOC . . . . . .Socket
SPDT . . . . . Single Pole Double Throw
SPR . . . . . Spring
SQ . . . . . Square
SRTD . . . . . Serrated
SSCR . . . . . .Setscrew
SST . . . . . Stainless Steel
STD . . . . . .Standard

U

UPR . . . . . Upper

W

WHL . . . . . Wheel
WLD OR **WLDMT** . . . . . Weldment

Chapter 8

Index

Numerics

100827 . . . . . *4-2, 5-2, 5-4, 5-6*
100966 . . . . . *1-4*
101404 . . . . . *4-2, 4-4*
101510 . . . . . *2-2, 2-4, 2-8*
102498 . . . . . *3-6, 3-8*
102604 . . . . . *3-6, 3-8*
103841 . . . . . *1-4, 5-2, 5-4, 5-6*
1-065-010011 . . . . . *5-8, 5-10, 5-11, 5-12*
1-076-010007 . . . . . *1-4, 3-6, 3-8*
1-076-010009 . . . . . *1-4*
1-076-010010 . . . . . *1-4, 3-6, 3-8*
1-076-010012 . . . . . *1-4*
108820 . . . . . *1-4*
108841 . . . . . *1-2*
109985 . . . . . *1-4*
110-0344 . . . . . *3-6, 3-8*
1-104-010002 . . . . . *1-4*
1-161-010003 . . . . . *1-4*
122767 . . . . . *5-6*
127351 . . . . . *2-2, 2-4, 2-8*
1-298-010001-1 . . . . . *1-4, 3-6, 3-8*
138567 . . . . . *1-6, 2-2, 2-4, 2-8, 5-2*
1-406-010010 . . . . . *1-4*
1-406-010012 . . . . . *1-4*
141251 . . . . . *1-5, 1-6*
141271 . . . . . *1-4*
142753 . . . . . *1-2*
144457 . . . . . *1-5, 1-6*
147072 . . . . . *2-2, 2-4, 2-8*
149192 . . . . . *3-2, 3-4*
150244 . . . . . *1-5, 1-6, 1-7, 2-2, 2-4, 2-8*
1-510-010003-09 . . . . . *2-10*
1-512-010004-05 . . . . . *4-2, 4-4*
1-512-010005-01 . . . . . *1-2, 4-2, 4-4*
1-512-010005-05 . . . . . *2-2, 5-6*
1-512-010005-09 . . *1-4, 1-5, 2-2, 2-4, 2-6, 2-8, 2-10, 3-2, 3-4, 3-6, 3-8, 5-8, 5-10, 5-11, 5-12*
1-512-010005-13 *1-4, 1-5, 1-6, 1-7, 2-2, 2-4, 2-6, 2-8, 3-2, 3-4*
1-512-010005-15 *1-2, 1-5, 1-6, 1-7, 2-2, 2-4, 2-8, 3-6, 3-8, 4-2, 5-7, 5-8, 5-9, 5-10, 5-11, 5-12*
1-512-010005-19 . . . . . *1-5, 1-6, 5-2, 5-4, 5-6*
1-512-010007-12 . . . . . *3-6, 3-8*
1-516-010001-27 . . . . . *5-8, 5-10, 5-11, 5-12*
1-557-010013 . . . . . *1-2, 3-2, 3-4*
1-557-010014 . . . . . *1-4*
1-557-010362-40 . . . . . *1-4*
156010 . . . . . *6-2*
1-573-010006 . . . . . *6-2*
1-573-010096 . . . . . *6-2*
1-573-010373 . . . . . *6-2*
157648 . . . . . *4-2, 4-4*
160151 . . . . . *1-4*
160155 . . . . . *1-4*
164138 . . . . . *4-2, 4-4*
164142 . . . . . *4-2, 4-4*
1-647-010004240 . . . . . *5-8, 5-10, 5-11*
1-647-010004255 . . . . . *2-2*
1-647-010004257 . . . . . *5-12*
1-654-010047-04 . . . . . *4-2*
1-654-010047-06 . . . . . *1-2, 4-2*
1-654-010047-07 . . . . . *4-2*
1-654-010047-08 . . . . . *4-2*
1-654-010049-01 . . . . . *3-6, 3-8*
1-654-010051-10 . . . . . *2-2*
1-654-010051-12 . . . . . *5-6*
1-654-010055-03 . . . . . *3-6, 3-8*
1-654-010055-07 . . . . . *2-10*
1-654-010055-11 . . . . . *1-4*

1-654-010055-13 . . . . . 3-2, 3-4
1-654-010059-02 5-9
1-654-010059-03 1-4
1-654-010059-09 5-6
1-654-010059-13 1-5
1-654-010061-04 4-2
1-654-010061-06 . . . . . 1-2, 5-8, 5-10, 5-11, 5-12
1-654-010061-07 1-4
1-654-010061-09 . . . . . 5-2, 5-4, 5-6
1-654-010061-13 . . . . . 1-5, 1-6, 1-7, 2-2, 2-4, 2-8
1-654-010061-15 . . . . . 3-6, 3-8
1-654-010070-02 5-12
1-654-010070-03 . . . . . 2-10, 5-8, 5-10, 5-11
1-654-010125-18 . . . . . 5-2, 5-4
1-659-010004 1-4
168226 . . . . . 3-6, 3-8
169484 1-6
169486 1-6
169492 . . . . . 1-5, 1-6
169493 2-2
171811 1-6
172829 5-4
172830 . . . . . 1-7, 2-4, 2-8
174435 . . . . . 4-2, 4-4
174436 . . . . . 4-2, 4-4
174437 . . . . . 4-2, 4-4
174732 . . . . . 1-5, 1-6, 1-7
174749 1-7
175151 . . . . . 4-2, 4-4
176846 . . . . . 3-2, 3-4
176848 3-4
176849 3-4
178514 . . . . . 4-2, 4-4
179079 1-2
179082 . . . . . 3-2, 3-4
179545 . . . . . 3-2, 3-4
179546 . . . . . 3-2, 3-4
179547 . . . . . 3-2, 3-4
179548 1-2
179551 1-7
179563 1-7
179966 . . . . . 3-2, 3-4
179975 1-2
181085 3-4
181843 3-2
181844 3-2
181845 3-2
182220 3-8
182222 3-8
182224 . . . . . 3-6, 3-8
182225 3-8
182233 3-8
182241 . . . . . 3-4, 3-8
182242 . . . . . 3-2, 3-8
182257 5-7
182290 4-2
182310 . . . . . 4-2, 4-4
184413 1-6
185203 4-4
185204 4-4
185205 4-2
1-861-010004 1-4
1-861-010032-07 . . . . . 1-2, 4-2
1-861-010032-09 . . . . . 3-6, 3-8
1-861-010032-14 2-2
1-861-010032-15 . . . . . 2-2, 2-4, 2-8
1-861-010032-18 1-5
1-861-010032-20 . 3-6, 5-7, 5-8, 5-9, 5-10, 5-11, 5-12
1-861-010032-32 . . . . . 5-8, 5-10, 5-11, 5-12
1-861-010034-15 5-9
195566 1-5
197341 1-4
197344 1-4
201244 5-9
206790 5-12
207142 . . . . . 1-5, 1-6

2-102-010032 . . . . . 4-2, 4-4
210879 . . . . . 1-5, 5-2, 5-4, 5-6
210880 5-9
214396 2-10
217077 5-12
217079 5-12
217082 5-12
217084 5-12
218785 . . . . . 1-5, 1-6
224743 2-4
224744 . . . . . 2-4, 2-10
224745 2-4
224746 . . . . . 2-2, 2-10
224747 2-2
224748 2-2
224752 . . . . . 2-4, 2-8
224763 2-8
224767 2-8
224768 . . . . . 2-6, 2-8, 2-10
224789 5-12
224790 5-12
227126 . . . . . 5-2, 5-4, 5-6
227127 5-6
227129 5-6
227132 . . . . . 5-2, 5-4, 5-6
227147 . . . . . 5-2, 5-4, 5-6
227148 . . . . . 5-2, 5-4, 5-6
227150 . 5-2, 5-4, 5-6, 5-7, 5-8, 5-9, 5-10, 5-11, 5-12
227163 5-12
227170 5-9
227173 5-9
227175 5-12
227176 5-12
227179 5-12
227180 5-12
227189 2-11
227191 2-11
227198 2-11
227207 2-11
227210 2-11
227221 2-12
227225 5-8
227228 5-7
227231 . . . . . 5-8, 5-10, 5-11
227232 5-8
227235 . . . . . 5-10, 5-11
227236 5-9
227237 5-10
227242 5-11
227245 2-12
227247 . . . . . 2-10, 2-11
227265 2-11
227267 2-11
227272 2-11
227273 2-11
227299 2-10
227917 . . . . . 5-2, 5-4, 5-6
227919 . . . . . 5-2, 5-4, 5-6
227921 . . . . . 5-2, 5-4, 5-6
227922 . . . . . 5-2, 5-4, 5-6
227925 . . . . . 5-2, 5-4, 5-6
230839 5-10
230841 5-11
233835 3-6
233836 3-6
233838 3-6
233841 . . . . . 3-2, 3-6
233842 . . . . . 3-4, 3-6
233845 3-6
233847 3-6
233849 3-6
233850 3-6
233851 3-6
233873 3-2
233874 3-4
233875 3-2

233876 3-4
233877 3-2
233878 3-4
233887 3-6
2-368-010287 . . . . . 4-2, 4-4
239291 . . . . . 5-2, 5-4
239293 . . . . . 5-2, 5-4
239522 1-5
240342 1-5
2-423-010034 1-2
243054 1-5
243129 1-5
247319 2-10
253721 1-5
253809 1-5
253811 1-5
253814 1-5
2-557-010009 1-2
2-573-010198 6-2
2-573-010469 . . . . . 1-5, 1-6
3/4-10X2-1/2CB 5-7, 5-9
3/4-16HSN 3-6, 3-8
3J397 . . . . . 3-6, 3-8
3K608 3-8
3K613 . . . . . 3-6, 3-8
4K076 3-8
4K551 2-10
5D954 . . . . . 3-2, 3-4
5J375 . . . . . 5-10, 5-11
5J425 2-10
61D16ER 5-2, 5-4, 5-6
6D337 . . . . . 3-6, 3-8
6J460 . . . . . 5-2, 5-4, 5-6
6K351 5-10
6K352 5-10
6K478 2-10
70260977 . . . . . 4-2, 4-4
7J569 . . . . . 3-6, 3-8
8-557-010095 . . . . . 1-2, 3-2, 3-4
8-557-010149 1-4
8-573-010059 6-2
8-573-010084 6-2
8K756 . . . . . 3-2, 3-4
9J500 5-11
9K289 . . . . . 3-2, 3-4
9K295 3-8
9K453 . . . . . 3-6, 3-8
9K454 . . . . . 3-6, 3-8

T

TR416 1-4

Table provided for general use.

NOTES:

Instructions for Ordering Parts

**** Repair parts must be ordered through an Authorized Dealer ****

DEALER INSTRUCTIONS FOR ORDERING PARTS FROM LANDOLL PARTS DISTRIBUTION CENTER

Phone: 800-423-4320 or 785-562-5381 **Fax: 888-527-3909**
Order online: dealer.landoll.com

DATA PLATE

The Data Plate, which lists the model number and serial number, is located on the front of the frame.

SERIAL NUMBER

The following information will help decode the serial number.

25C2400100 = xxmyyssssss

xx	= model series (i.e. “25” for all Zone Commanders)
m	= month of manufacture (ex. “C” means March. The letter I is not used.)
yy	= year manufactured (ex. “24” means 2024)
sssss	= sequential number used to track warranty and service information.

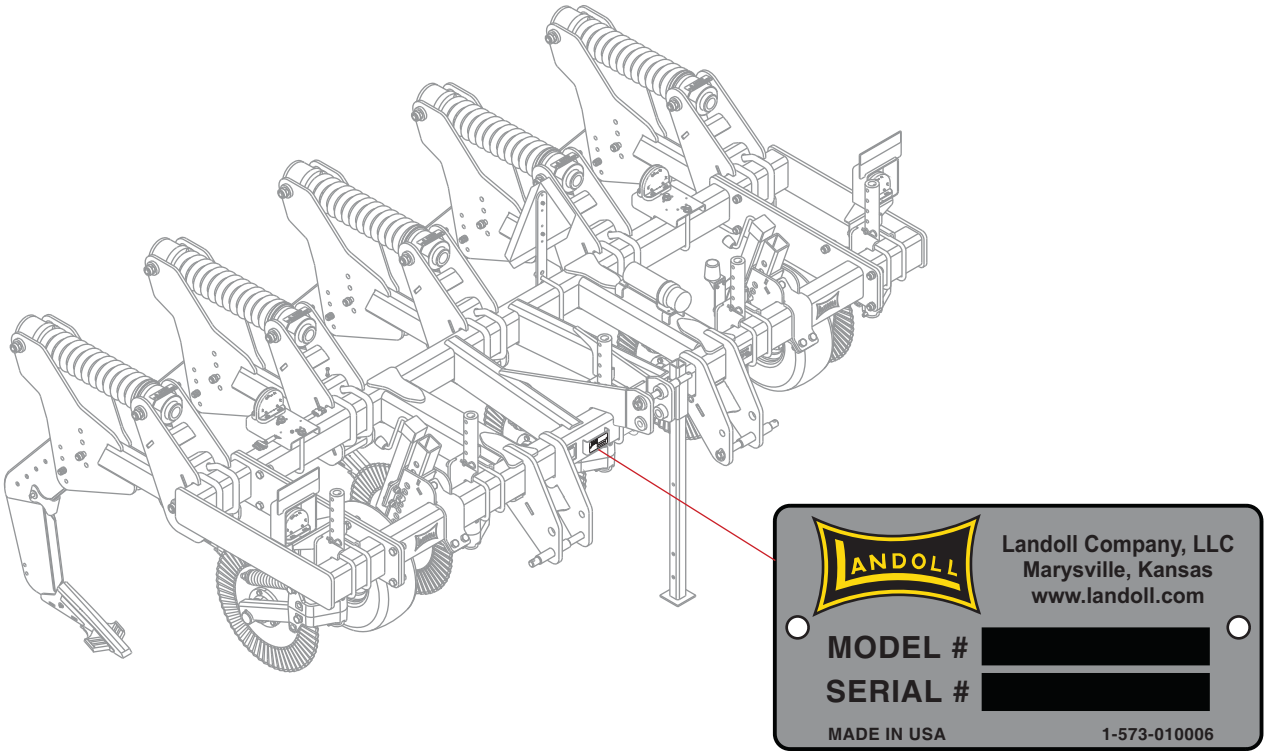

Figure: Data Plate and Location

Manuals for 2511N - 3, 4, 5 Shanks

Manual Number	Manual Type
F-1172	Operator’s Manual
F-1171	Parts Manual

Document Control Revision Log:

Date	Form #	Improvement(s): Description and Comments
09/2024	F-1171-2409	Initial Release - Manual for 2511N Narrow Rigid Models Only - 3, 4, 5 Shanks ECN 50527 - Change to Wear Guard Keeper (PUB 01/27/2025)
01/2026	F-1171-2601	ECN 51698 - Shank Clamp Asm ECN 52123 - Finishing Roll Pin (PUB 06/24/2026)
10/2026	F-1171-2610	ECN 51800, 52221 - 3/4 Straight Leg Shank and Point

Equipment from Landoll Company, LLC is built to exacting standards ensured by ISO 9001:2015 registration at all Landoll manufacturing facilities.

2511N
Zone Commander
Models: 3, 4, 5 Shanks
Parts Manual

FOR MODELS BEFORE 04/15/2024
SEE F-757 RIGID & FOLDING ZONE COMMANDER

Re-Order Part Number F-1171

LANDOLL COMPANY, LLC
1900 North Street
Marysville, Kansas 66508
(785) 562-5381
800-428-5655 ~ WWW.LANDOLL.COM

Copyright 2026. Landoll Company, LLC
"All rights reserved, including the right to reproduce this material or portions thereof in any form."