2512 Zone Commander

FOR UNITS SHIPPED AFTER DECEMBER 1, 2020
(SN:25M201237 AND ABOVE)
PREVIOUS UNITS SHOULD REFERENCE F-1039-0320

Parts Manual

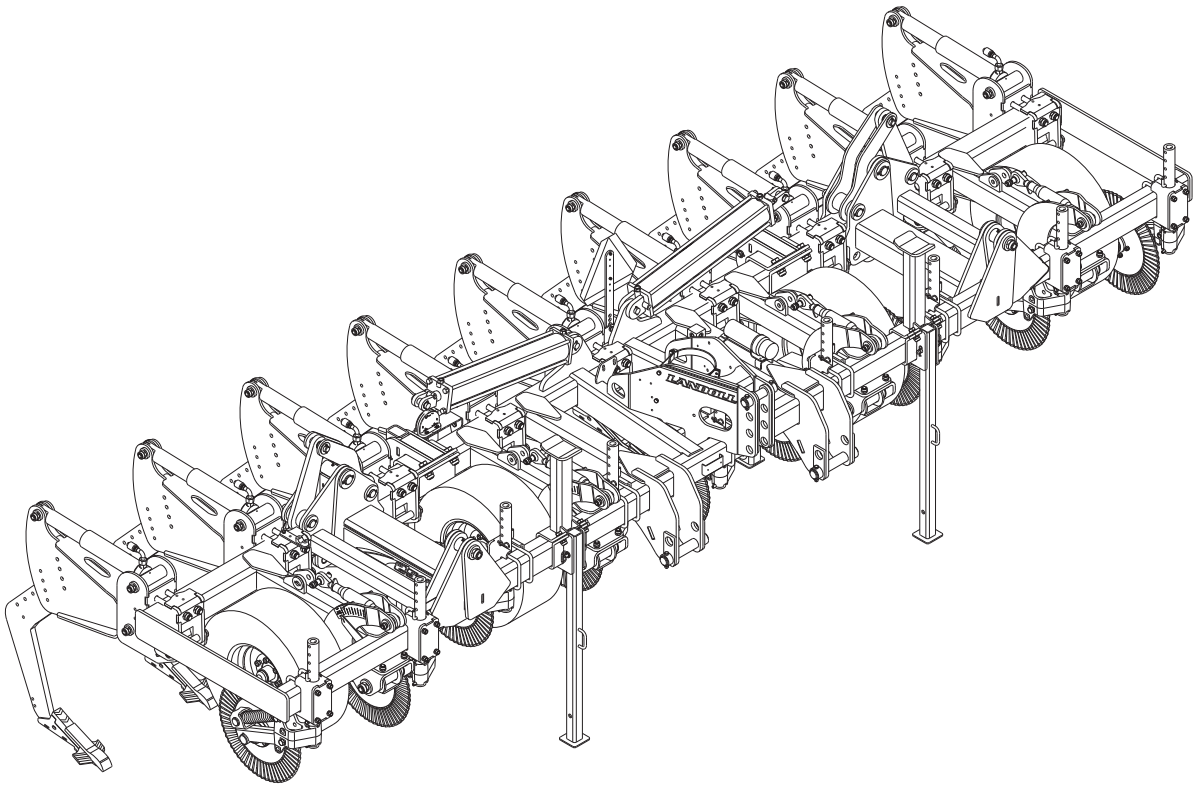

LANDOLL COMPANY, LLC
1900 North Street
Marysville, Kansas 66508
(785) 562-5381
800-428-5655 ~ WWW.LANDOLL.COM

F-1048-2607

Instructions for Ordering Parts

**** Repair parts must be ordered through an Authorized Dealer ****

DEALER INSTRUCTIONS FOR ORDERING PARTS FROM LANDOLL PARTS DISTRIBUTION CENTER

Phone: 800-423-4320 or 785-562-5381 **Fax: 888-527-3909**
Order online: dealer.landoll.com

DATA PLATE

The Data Plate, which lists the model number and serial number, is located on the front of the frame.

SERIAL NUMBER

The following information will help decode the serial number.
25C2400100 = xxmyyssssss

xx	= model series (i.e. “25” for all Zone Commanders)
m	= month of manufacture (ex. “C” means March. The letter I is not used.)
yy	= year manufactured (ex. “24” means 2024)
sssss	= sequential number used to track warranty and service information.

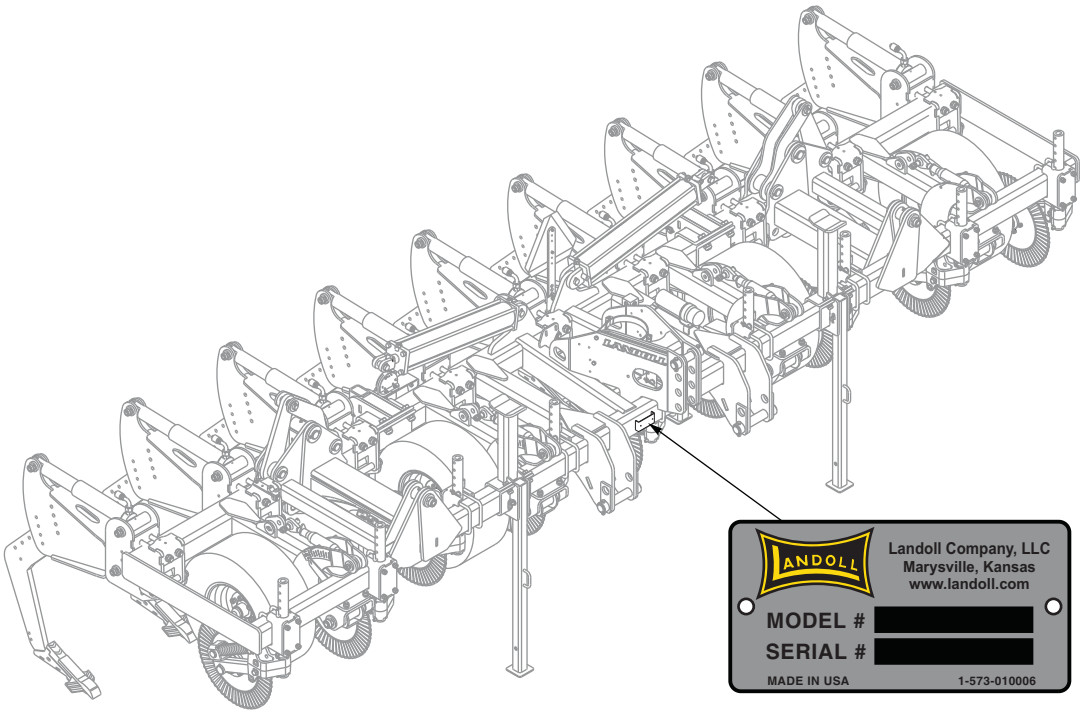

Figure: Data Plate

Manuals for 2512 Zone Commander and Caddy

FOR UNITS SHIPPED AFTER DECEMBER1, 2020 (SN: 25M201237 AND ABOVE)
PREVIOUS UNITS SHOULD REFERENCE F-1039-0320

Manual Number	Manual Type
F-1049	Operator’s Manual
F-1048	Parts Manual **(2512 Zone Commander ONLY)**
F-1075	Caddy Parts Manual **(ONLY)**

Table of Contents

1 Frames

Rigid Frame 1-1
Folding Frame 1-3
Auto Reset Shank Clamp, Spring (AFT. 01/01/2024) 1-7
Auto Reset Shank Clamp, Spring - Setback (AFT. 01/01/2024) 1-8
Auto Reset Shank Clamp, Spring (01/16/23 TO 01/01/24) 1-9
Auto Reset Shank Clamp, Spring - Setback (01/16/23 TO 01/01/24) 1-10
Auto Reset Shank Clamp, Spring (BEF. 01/16/2023) 1-11
Auto Reset Shank Clamp, Spring - Setback (BEF. 01/16/2023) 1-12
Auto Reset Shank Clamp, Hydraulic (AFT. 02/07/2025) 1-13
Auto Reset Shank Clamp, Hydraulic - Setback (AFT. 02/07/2025) 1-14
Auto Reset Shank Clamp, Hydraulic (12/12/23 TO 02/07/25) 1-15
Auto Reset Shank Clamp, Hydraulic - Setback (12/12/23 TO 02/07/25) 1-16
Auto Reset Shank Clamp, Hydraulic (BEF. 12/12/2023) 1-17
Auto Reset Shank Clamp, Hydraulic - Setback (BEF. 12/12/2023) 1-18
RSB Shank Clamp Assembly (Rigid Shear Bolt) 1-19
Jack Stand and Wing Rest (AFTER 06/07/2023) 1-21
Jack Stand and Wing Rest (11/01/21 TO 06/07/23) 1-23
Jack Stand and Wing Rest (BEFORE 11/01/2021) 1-24
Jack Stand, Rear - Optional 1-25
Gauge Wheel Assembly - Horizontal Mount (Left and Right) 1-27
Gauge Wheel Assembly - Vertical Mount (Left and Right) 1-29
Hub Assembly 1-31
Rear Tow Bar Hitch - Optional 1-33

2 Coulter Assemblies

Blade Coulter - Straight, Rippled & Pyramid Option (Left Hand) 2-1
Blade Coulter - Straight, Rippled & Pyramid Option (Right Hand) 2-3
Heavy Duty Coulter (AFTER 02/2022) 2-5
Heavy Duty Coulter (BEFORE 02/2022) 2-7
Coulter Placement 2-9

3 Electrical

Lighting and Reflectors (Rigid 4 Shank) 3-1
Lighting and Reflections (Rigid 5/6/7/8 Shank) 3-3
Lighting and Reflectors (Folding) 3-5
Wiring Diagram 3-7

4 Hydraulics

2512 Folding Frame Hydraulic Diagram (AFTER 11/01/2021) 4-1
2512 Folding Frame Hydraulic Diagram (BEFORE 11/01/2021) 4-3
2512 Accumulator Bladder 4-6

2512 Hydraulics, 4 Shank 4-7
2512 Hydraulics, 5 Shank 4-8
2512 Hydraulics, 6 Shank 4-9
2512 Hydraulics, 7 Shank (Rigid and Folding) 4-11
2512 Hydraulics, 8 Shank (Rigid and Folding) 4-13
2512 Hydraulics, 9 Shank (Folding) 4-15
Manifold-Draft Assembly 4-17
Manifold-Shank Cylinder Assembly 4-18
Wing Lock Kit - Optional 4-19
Hydraulic Cylinder, 1-1/2 x 1-1/2 - 230890 4-21
Hydraulic Cylinder, 3 x 9-1/2 - 209372 4-22
Hydraulic Cylinder, 4 x 24 - 108331 4-23
Hydraulic Cylinder, 5 x 30 - 233870 4-24
Hydraulic Cylinder, 6 x 30 - 233833 4-25

5 Shanks

Parabolic Shank, 1-1/4 5-1
Straight Leg Shank, 1-1/4 5-3
Straight Leg Shank, 3/4 (AFTER 02/2026) 5-5
Straight Leg Shank, 3/4 (BEFORE 02/2026) 5-7
Coverboard Kit 5-9

6 Points

Points for 1-1/4 Shank 6-1
Points for 3/4 Shank 6-2

7 Finishing Options

Closing Platform (AFTER 04/2024) 7-1
Closing Platform (02/2022 TO 04/2024) 7-3
Closing Platform (BEFORE 02/2022) 7-5
Closer Wheel 7-7
Flat Bar Basket - 20" 7-8
Closer Disc 7-9
Crumbler Reel 7-10
Packer Reel 7-11
Treader 7-12

8 Decals

Decals 8-1
Decal Placement 8-3

9 Glossary

10 Index

Table provided for general use.

NOTES:

Frames

Rigid Frame

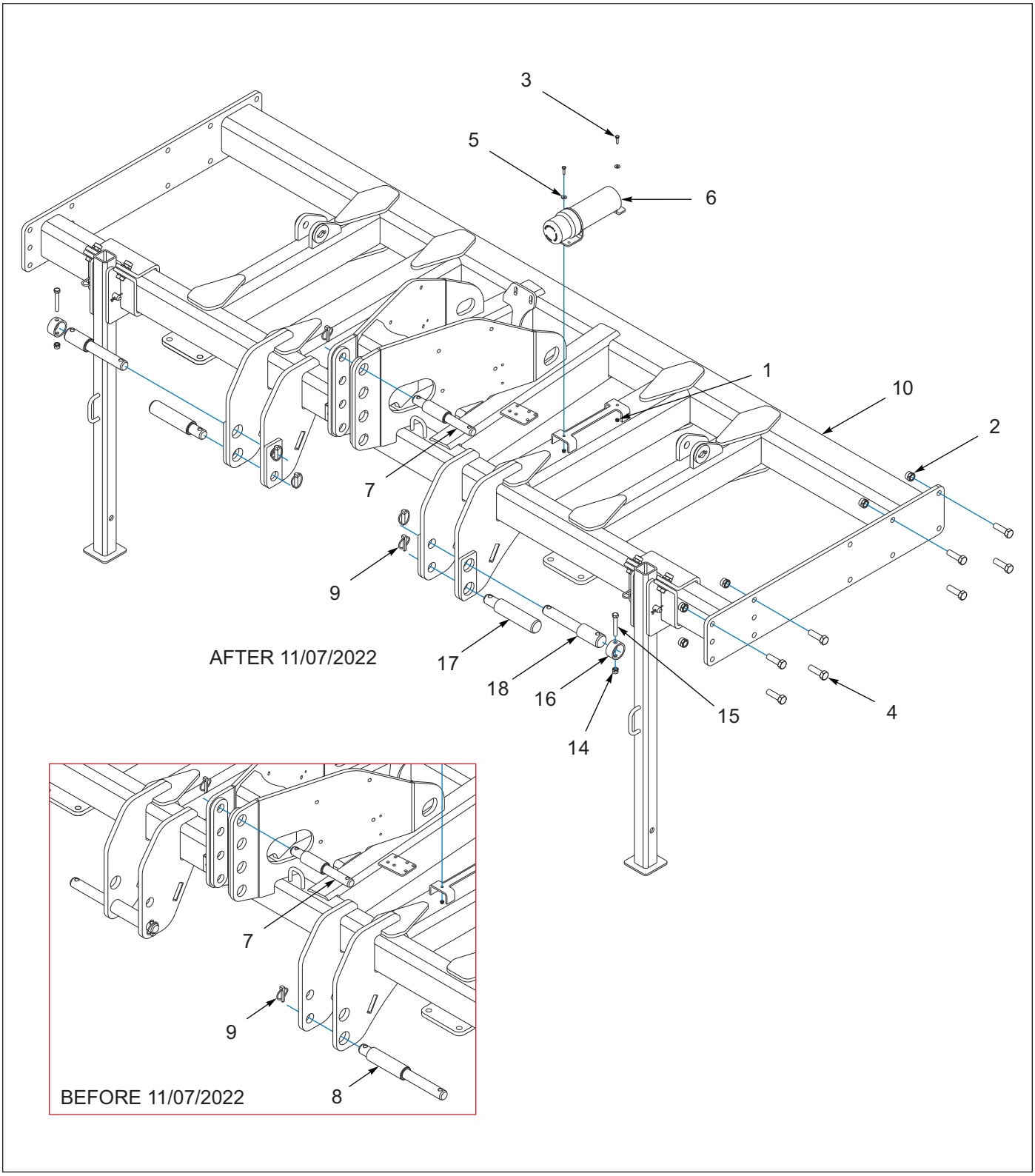

Figure 1-1: Rigid Frame (1 of 2)

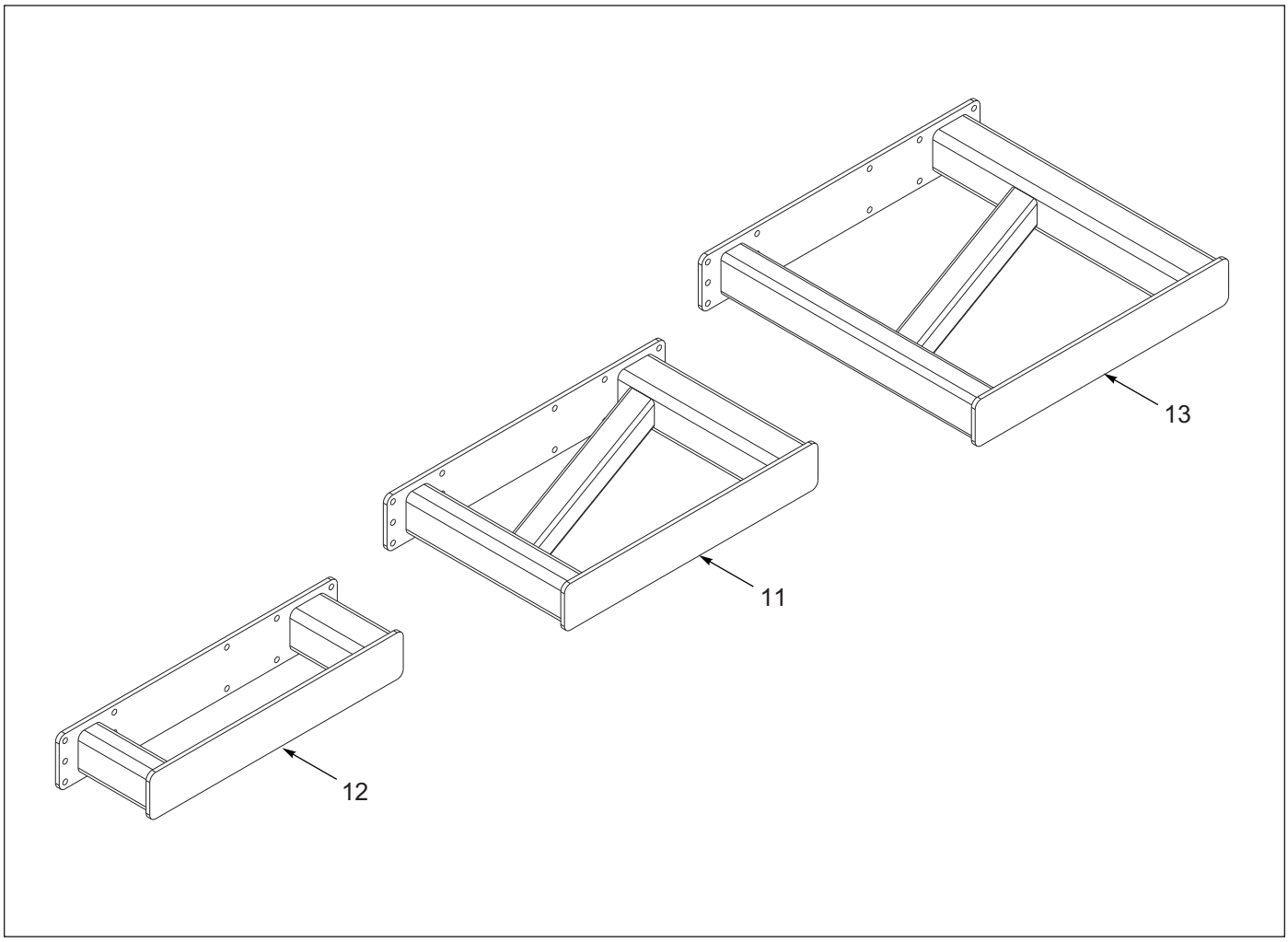

Figure 1-2: Rigid Frame (2 of 2)

Rigid Frame

ITEM	PART NUMBER	DESCRIPTION	QTY.
1	1-512-010005-01	NUT,HEX,SLFLKG GRB 1/4-20	2
2	1-512-010005-15	NUT,HEX,SLFLKG GRB 3/4-10	16
3	1-654-010047-06	SCREW,HX CP 1/4-20UNCX1 GR5	2
4	1-654-010061-07	SCREW,HX CP 3/4-10UNCX2-1/2G5	8
5	1-861-010032-07	WASHER,FLAT 1/4 ZP	2
6	142753	MANUAL HOLDER	1
7	191655	PIN TOP LINK CAT II/III/IV-N	1
8	191656	PIN HITCH CAT II/III/IV-N **(BEFORE 11/07/2022)**	2
9	2-557-010417	PIN, LYNCH CAT III	5
10	210891	FRAME-RIGID, 2512 WLDMT	1
11	213207	EXTENSION WLDMT, 27IN **(7 SHANKS)**	2
12	213212	EXTENSION-12 INCH, WLDMT **(6 SHANKS)**	2
13	214353	FRAME-EXTENSION, LONG, WLDMT **(8 SHANKS)**	2
14	1-512-010005-09	NUT,HEX,SLFLKG, 1/2-13 GRB **(AFTER 11/07/2022)**	2
15	1-654-010055-10	SCREW HEX CAP 1/2-13X3-1/4GR5 **(AFTER 11/07/2022)**	2
16	221925	BUSHIN-HITCH LOWER **(AFTER 11/07/2022)**	2
17	240265	PIN-HITCH, CAT IV-N **(AFTER 11/07/2022)**	2
18	240266	PIN-HITCH, CAT III **(AFTER 11/07/2022)**	2

Folding Frame

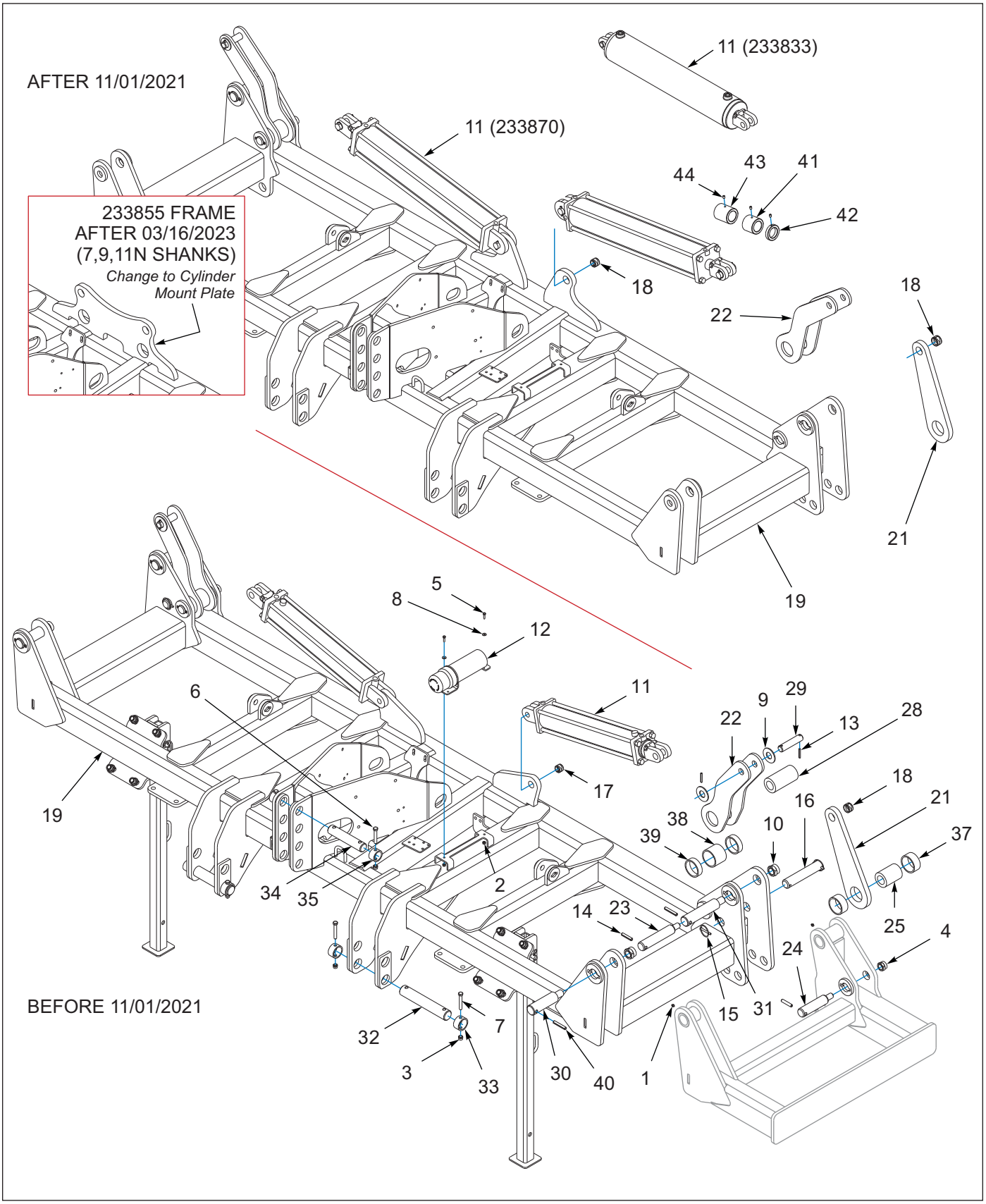

Figure 1-3: 2512 Folding Frame (1 of 2)

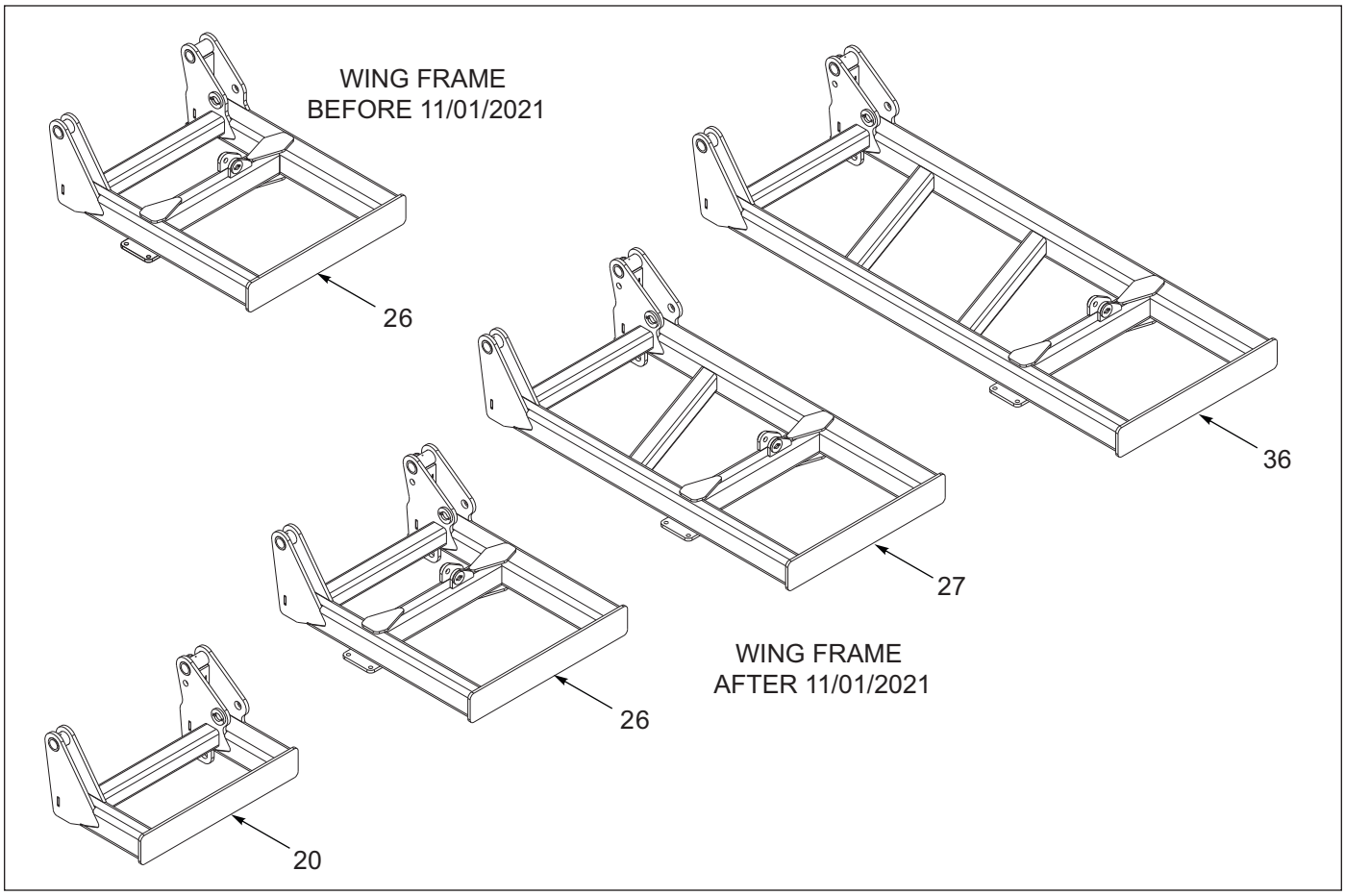

Figure 1-4: 2512 Folding Frame (2 of 2)

Folding Frame

ITEM	PART NUMBER	DESCRIPTION	QTY.
1	1-298-010001-1	ZERK FITTING 1/4 SAE	4
2	1-512-010005-01	NUT,HEX,SLFLKG GRB 1/4-20	2
3	1-512-010005-09	NUT,HEX,SLFLKG, 1/2-13 GRB	6
4	1-512-010005-19	NUT 1-8 HEX SLF-LOCKING GRB	4
5	1-654-010047-06	SCREW,HX CP 1/4-20UNCX1 GR5	2
6	1-654-010055-09	SCREW,HX CP,1/2-13UNCX3 GR5	2
7	1-654-010055-10	SCREW HEX CAP 1/2-13X3-1/4GR5	4
8	1-861-010032-07	WASHER,FLAT 1/4 ZP	2
9	116100	WASHER 1-1/4 NAR FL ZP/CD **(AFTER 11/01/2021)**	4
9	1-861-010032-29	WASHER, FLAT 1-1/4 W ZP/CD **(BEFORE 11/01/2021)**	4
10	101385	NUT,HEX SLFLKG,1-1/4-7 GRB	4
11	233870	CYLINDER, HYD 5 X 30, 3000 PSI **(SEE PAGE 4-23)** **(AFTER 11/01/2021 - 7, 8, 9, 10, 11, 11N, 12, 13, 14 SHANKS)**	2
11	233833	CYLINDER-HYD, 6 X 30, 3000 PSI **(SEE PAGE 4-25)** **(AFTER 11/01/2021 - 15, 16 SHANKS)**	2
11	108331	CYLINDER, HYD 4X24 SP **(BEFORE 11/01/2021) (SEE PAGE 4-26)**	2
12	142753	MANUAL HOLDER	1
13	147072	PIN, SPRING SLOTTED 5/16 X 2	4
14	172802	PIN SPRING SLOTTED 1/2X2-1/2	4
15	172946	PIN LYNCH 5/16 X 2.00	4

Folding Frame

ITEM	PART NUMBER	DESCRIPTION	QTY.
16	179470	PIN 1-3/4X7-3/4, 2H	2
17	192890	BUSHING 1-3/8ODX1 IDX1 STEEL **(BEFORE 11/01/2021)**	2
18	2-150-010174	BUSHING,1-5/8X1-1/4X1 **(BEFORE 11/01/2021, QTY=2)**	4
19	233855	FRAME-FOLDING (5), 2512F WLDMT **(AFTER 11/01/2021 - 7, 9, 11N SHANKS)**	1
19	219955	FRAME-FOLDING (5), 2512F WLDMT **(BEFORE 11/01/2021 - 7, 9, 11N SHANKS)**	1
19	233856	FRAME-FOLDING (6), 2512F WLDMT **(AFTER 11/01/2021 - 8, 10, 12 SHANKS)**	
19	221314	FRAME-FOLDING (6), 2512F WLDMT **(BEFORE 11/01/2021 - 8, 10, 12 SHANKS)**	1
19	233857	FRAME-FOLDING (7), 2512F WLDMT **(AFTER 11/01/2021 - 11, 13, 15 SHANKS)**	1
19	221939	FRAME-FOLDING (7), 2512F WLDMT **(BEFORE 11/01/2021 - 11, 13, 15 SHANKS)**	1
19	233858	FRAME-FOLDING (8), 2512F WLDMT **(AFTER 11/01/2021 - 14, 16 SHANKS)**	1
19	221943	FRAME-FOLDING (8), 2512F WLDMT **(BEFORE 11/01/2021 - 14, 16 SHANKS)**	1
20	233859	FRAME-WING, LH, (1) WLDMT **(LEFT ONLY) (SHOWN) (AFTER 11/01/2021 - 7 & 8 SHANKS)**	1
20	219973	FRAME-WING, LH, (1) WLDMT **(LEFT ONLY) (SHOWN) (BEFORE 11/01/2021 - 7 & 8 SHANKS)**	1
20	233860	FRAME-WING, RH, (1) WLDMT **(RIGHT ONLY) (AFTER 11/01/2021 - 7 & 8 SHANKS)**	1
20	219974	FRAME-WING, RH, (1) WLDMT **(RIGHT ONLY) (BEFORE 11/01/2021 - 7 & 8 SHANKS)**	1
21	233830	LINK-WING FOLD **(AFTER 11/01/2021)**	2
21	219977	LINK-WING FOLD **(BEFORE 11/01/2021)**	2
22	233852	LINK-WING FOLD **(AFTER 11/01/2021 - 11N, 12, 13, 14, 15, 16 SHANKS)**	4
22	233828	LINK-WING FOLD **(AFTER 11/01/2021 - 7, 8, 9, 10, 11, SHANKS)**	4
22	219978	LINK-WING FOLD **(BEFORE 11/01/2021)**	4
23	219980	PIN, 1-3/4 X 7-1/2, STEP	2
24	219981	PIN, 1-3/4 X 5-3/4, STEP	2
25	219983	BUSHING, 3.0 X 1.78 X 4-3/32	2
26	233861	FRAME-WING, LH, (2), WLDMT **(LEFT ONLY) (SHOWN) (AFTER 11/01/2021 - 9, 10, 11 SHANKS)**	1
26	219991	FRAME-WING, LH, (2), WLDMT **(LEFT ONLY) (SHOWN) (BEFORE 11/01/2021 - 9, 10, 11 SHANKS)**	1
26	233862	FRAME-WING, RH, (2), WLDMT **(RIGHT ONLY) (AFTER 11/01/2021 - 9, 10, 11 SHANKS)**	1
26	219992	FRAME-WING, RH, (2), WLDMT **(RIGHT ONLY) (BEFORE 11/01/2021 - 9, 10, 11 SHANKS)**	1
27	233865	FRAME-WING, LH, (3), WLDMT **(LEFT ONLY) (SHOWN) (AFTER 11/01/2021 - 11N, 11, 12, 13, 14, 15, 16 SHANKS)**	1
27	219995	FRAME-WING, LH, (3), WLDMT **(LEFT ONLY) (SHOWN) (BEFORE 11/01/2021 - 11N, 11, 12, 13, 14, 15, 16 SHANKS)**	1
27	233866	FRAME-WING, RH, (3), WLDMT **(RIGHT ONLY) (AFTER 11/01/2021 - 11, 12, 13, 14, 15, 16 SHANKS)**	1

Folding Frame

ITEM	PART NUMBER	DESCRIPTION	QTY.
27	219996	FRAME-WING, RH, (3), WLDMT **(RIGHT ONLY)** **(BEFORE 11/01/2021 - 11, 12, 13, 14, 15, 16 SHANKS)**	1
28	221311	BUSHING, 3.0 X 1.78 X 5-7/8	2
29	221312	PIN, 1-1/4 X 5-1/2 (4-7/16)	2
30	221318	PIN-SHOULDER, 2X5-1/2	2
31	221319	PIN-SHOULDER, 2X7-1/2	2
32	221924	PIN-HITCH, LOWER CAT IV	2
33	221925	BUSHIN-HITCH LOWER	4
34	221926	PIN-HITCH, UPPER CAT IV	1
35	221927	BUSHING-HITCH UPPER	2
36	233867	FRAME-WING, LH, (4), WLDMT **(LEFT ONLY)** **(AFTER 11/01/2021 - 15, 16 SHANKS) (SHOWN)**	1
36	221947	FRAME-WING, LH, (4), WLDMT **(LEFT ONLY)** **(BEFORE 11/01/2021 - 15, 16 SHANKS) (SHOWN)**	1
36	233868	FRAME-WING, RH, (4), WLDMT **(RIGHT ONLY)** **(AFTER 11/01/2021 - 15, 16 SHANKS)**	1
36	221948	FRAME-WING, RH, (4), WLDMT **(RIGHT ONLY)** **(BEFORE 11/01/2021 - 15, 16 SHANKS)**	1
37	224450	BUSHING, 3.5X3.04X1-1/2, PVC	4
38	224451	BUSHING, 3.5X3.04X2-3/4, PVC	2
39	224452	BUSHING, 3.5X3.04X1, PVC	4
40	5D979	ROLL PIN 1/2 X 3	4
41	235888	STOP-CYL, 2 ROD X 2-5/8 **(USED W/233870 HYD CYL)** **(AFTER 06/07/2023 - 7, 8, 11N, 12, 13, 14 ALL CLAMP TYPES)** **(11/01/2021 TO 06/07/2023 - 7, 8, 12, 14, 14 ALL - 9, 10, 11 SPRING A/R)**	2
42	235889	STOP-CYL, 2 ROD X 5/8 **(USED W/233870 HYD CYL)** **(AFTER 06/07/2023 - 9, 10, 11 ALL CLAMP TYPES)** **(11/01/2021 TO 06/07/2023 - 9, 10, 11 HYD A/R, RSB)**	2
43	235892	STOP-CYL, 2 ROD X 3-7/16 **(USED W/233870 HYD CYL)** **(AFTER 11/01/2021 - 11N ALL CLAMP TYPES)**	2
44	122709	SCREW,SET,HXSKTCPPT 3/8-16X1/2 **(AFTER 11/01/2021)**	2
45	235887	STOP-CYL, 2-1/2 ROD X 3-5/16 **(USED W/233833 HYD CYL)** **(AFTER 11/01/2021 - 15, 16 ALL CLAMP TYPES)**	2
46	233795	STOP-CYLINDER,1-3/4 ROD,X2-1/4 **(USED W/108331 HYD CYL)** **(06/02/2021 TO 11/01/2021 - 7, 8 ALL CLAMP TYPES)**	2
47	222011	BUSHING-CYL STOP,1-3/4 X 1-3/8L **(USED W/108331 HYD CYL)** **(06/02/2021 TO 11/01/2021 - 9, 10, 11 HYD A/R, RSB)**	2
48	233795	STOP-CYLINDER,1-3/4 ROD,X2-1/4 **(USED W/108331 HYD CYL)** **(06/02/2021 TO 11/01/2021 - 9, 10, 11 SPRING A/R)**	2

Auto Reset Shank Clamp, Spring (AFT. 01/01/2024)

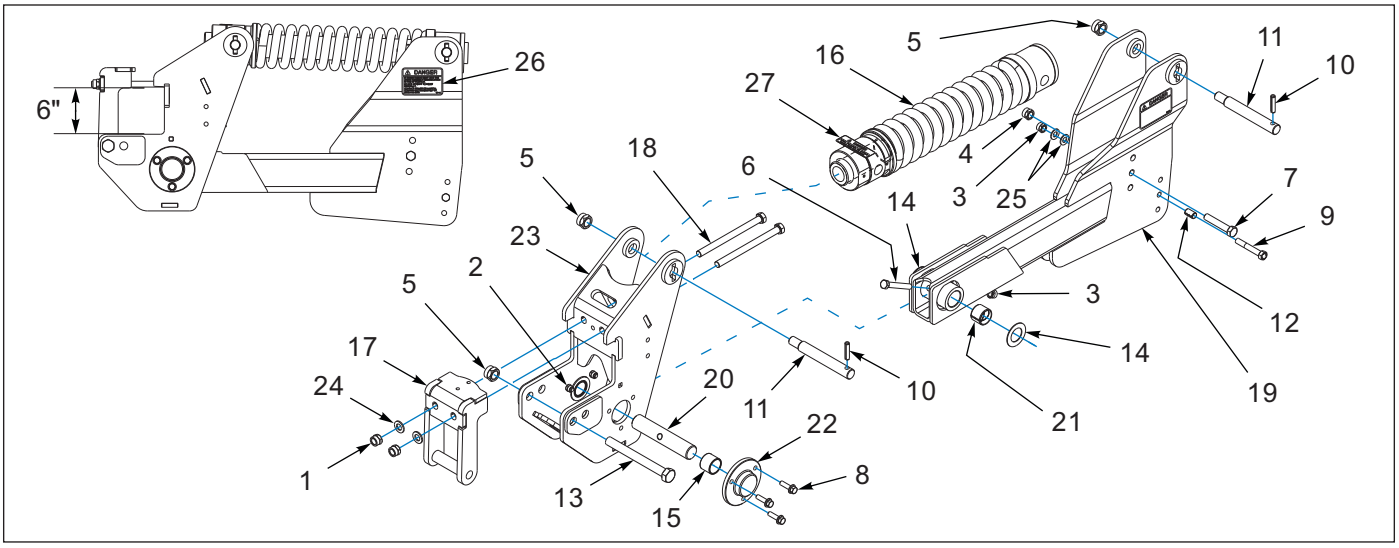

Figure 1-5: Auto Reset Shank Clamp, Spring (AFT. 01/01/2024)

Auto Reset Shank Clamp, Spring (AFT. 01/01/2024)

ITEM	PART NUMBER	DESCRIPTION	QTY.
	243130	CLAMP-SHANK, ASM W/CHROME PIN **(INCLUDES ITEMS 1-24)** **(FOR CYL. STOP USED W/CLAMP TYPE, SEE "FOLDING FRAME")**	1
1	1-512-010002-16	NUT,3/4-16 HEX,SLFLKG, GRC	2
2	1-512-010005-09	NUT,HEX,SLFLKG, 1/2-13 GRB	6
3	1-512-010005-13	NUT,HEX SLFLKG GRB 5/8-11	2
4	1-512-010005-15	NUT,HEX,SLFLKG GRB 3/4-10	1
5	1-512-010005-19	NUT 1-8 HEX SLF-LOCKING GRB	3
6	1-654-010059-14	SCREW HX CP,5/8-11UNCX4-1/2G5	1
7	1-654-010061-13	SCREW,HX CP 3/4-10UNCX4 GR5	1
8	243054	SCREW FLG HD 1/2-13X1-3/4 GR8	6
9	172829	SCREW HX CP 5/8-11X4 GR8 **(REPLACE WITH 253721)**	1
9	253721	SCREW HEX CAP,5/8-11UNC-4,GR9 **(AFTER 01/20/2026)**	1
10	141251	SPRING PIN,SLOTTED 1/2X2-1/4	2
11	144457	PIN, SHANK **(1-1/4 X 7-1/4)**	2
12	150244	BUSHING,CNX-5/8 X 3/4 X 1-1/4	1
13	172581	SCREW HEX CAP 1-8UNCX9.5 GR8	1
14	195566	WASHER THRUST 1-3/4 14 GA	2
15	210879	BEARING-HEF, 2.004X1.76X1-1/2	2
16	218785	SPRING-CLAMP, SHANK, ASSY	1
17	221412	GATE-CLAMP WLDMT	1
18	239516	SCREW, HXCP 3/4-16UNFX10 GR8	2
19	240314	SHANK MOUNT, 1-1/4, WLDMT	1
20	243129	PIN, SHANK PIVOT NITRO **(9 X 1-3/4)**	1
21	240342	BUSHING,SPRG 2 X 1-3/4 X 1-1/2	2
22	241980	CAP, BEARING STEEL 1-3/4 PIN	2
23	243128	CLAMP, SHANK WLDMT	1
24	622-3511-008	WASHER, FLAT 3/4 MIL-CARB SAE	2
25	1-861-010032-18	WASHER, FLAT 5/8 N ZP/CD	2
26	207142	DECAL, DANGER STUCK SHANK	1
27	2-573-010469	DECAL, DANGER SPRING	1

Auto Reset Shank Clamp, Spring - Setback (AFT. 01/01/2024)

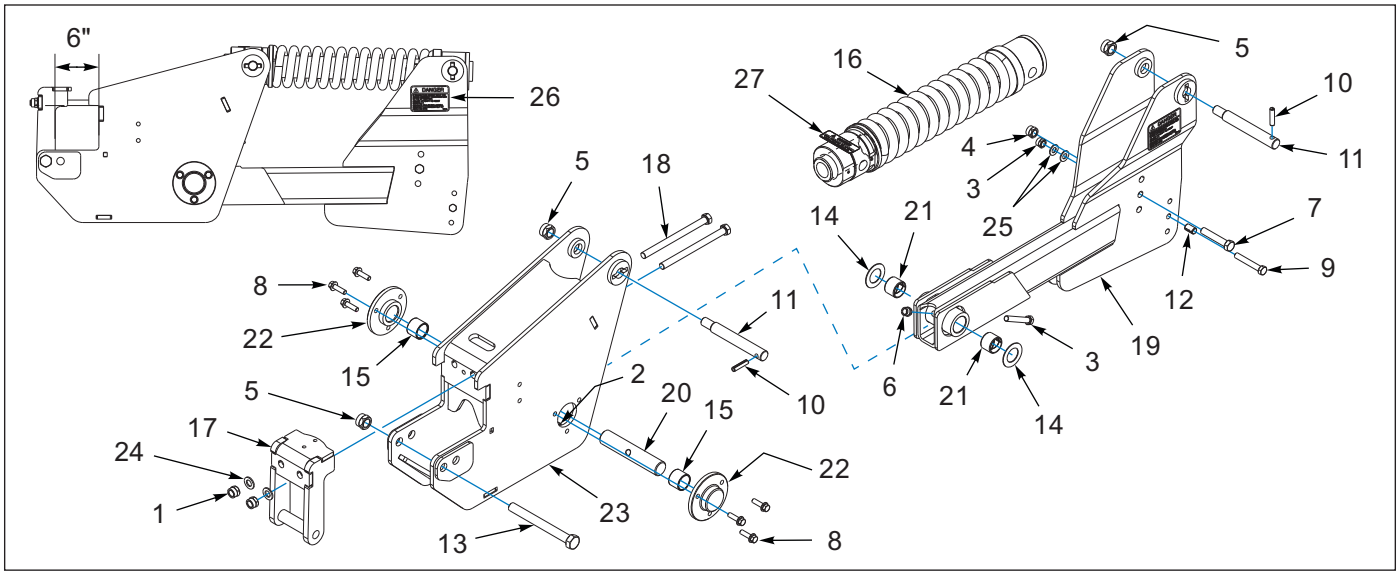

Figure 1-6: 2512 Auto Reset Shank Clamp, Spring - Setback (AFTER 01/01/2024)

Auto Reset Shank Clamp, Spring - Setback (AFT. 01/01/2024)

ITEM	PART NUMBER	DESCRIPTION	QTY.
	242821	CLAMP-SHANK, SETBACK, ASM **(INCLUDES ITEMS 1-23)** **(FOR CYL. STOP USED W/CLAMP TYPE, SEE "FOLDING FRAME")**	1
1	1-512-010002-16	NUT,3/4-16 HEX,SLFLKG, GRC	2
2	1-512-010005-09	NUT,HEX,SLFLKG, 1/2-13 GRB	6
3	1-512-010005-13	NUT,HEX SLFLKG GRB 5/8-11	2
4	1-512-010005-15	NUT,HEX,SLFLKG GRB 3/4-10	1
5	1-512-010005-19	NUT 1-8 HEX SLF-LOCKING GRB	3
6	1-654-010059-13	SCREW HEX CAP 5/8-11X4UNC GR5	1
7	1-654-010061-13	SCREW,HX CP 3/4-10UNCX4 GR5	1
8	243054	SCREW FLNG HD 1/2-13X1-3/4 GR8	6
9	172829	SCREW HX CP 5/8-11X4 GR8	1
10	141251	SPRING PIN,SLOTTED 1/2X2-1/4	2
11	144457	PIN, SHANK **(1-1/4 X 7-1/4)**	2
12	150244	BUSHING,CNX-5/8 X 3/4 X 1-1/4	1
13	172581	SCREW HEX CAP 1-8UNCX9.5 GR8	1
14	195566	WASHER THRUST 1-3/4 14 GA	2
15	210879	BEARING-HEF, 2.004X1.76X1-1/2	2
16	218785	SPRING-CLAMP, SHANK, ASSY	1
17	221412	GATE-CLAMP WLDMT	1
18	239516	SCREW, HXCP 3/4-16UNFX10 GR8	2
19	240314	SHANK MOUNT, 1-1/4, WLDMT	1
20	243129	PIN, SHANK PIVOT NITRO **(1-3/4 DIA)**	1
21	240342	BUSHING,SPRG 2 X 1-3/4 X 1-1/2	2
22	239522	CAP, CASTING MACHINED	2
23	242817	CLAMP-SHANK, SETBACK, WLDMNT	1
24	622-3511-008	WASHER, FLAT 3/4 MIL-CARB SAE	2
25	1-861-010032-18	WASHER, FLAT 5/8 N ZP/CD	2
26	207142	DECAL, DANGER STUCK SHANK	1
27	2-573-010469	DECAL, DANGER SPRING	1

Auto Reset Shank Clamp, Spring (01/16/23 TO 01/01/24)

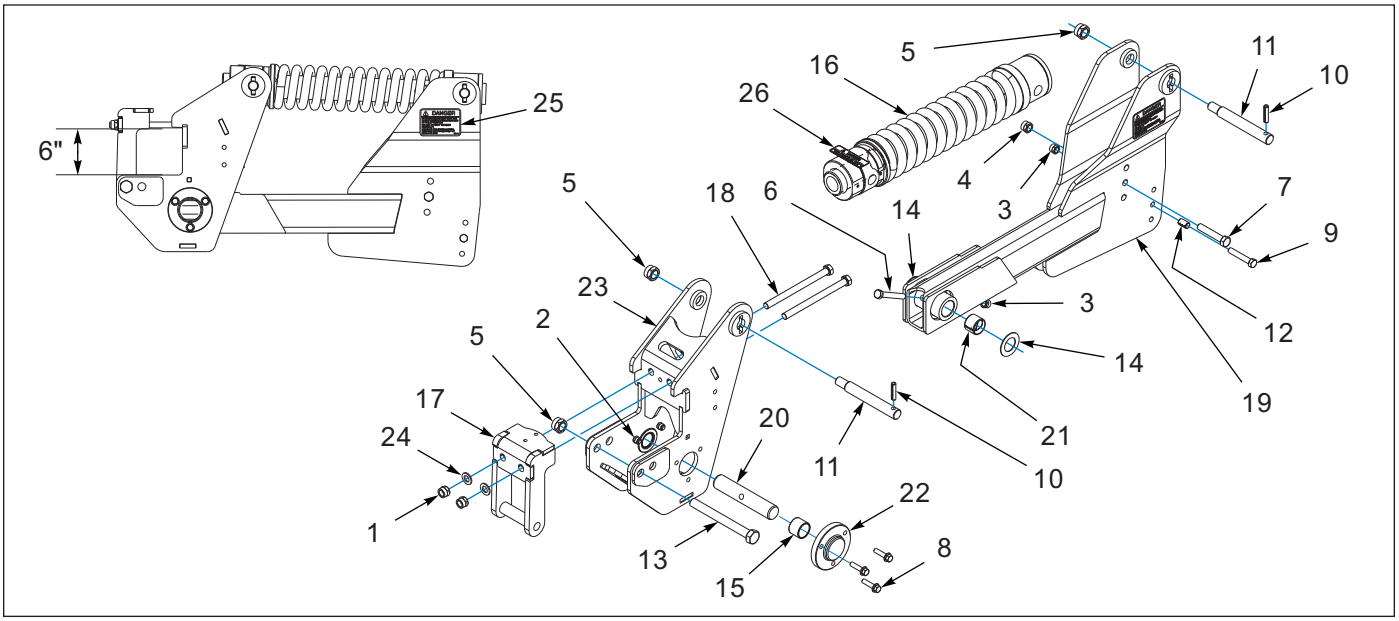

Figure 1-7: Auto Reset Shank Clamp, Spring (01/16/2023 TO 01/01/2024)

Auto Reset Shank Clamp, Spring (01/16/23 TO 01/01/24)

ITEM	PART NUMBER	DESCRIPTION	QTY.
	243130	CLAMP-SHANK, ASM W/CHROME PIN **(INCLUDES ITEMS 1-24)** **(FOR CYL. STOP USED W/CLAMP TYPE, SEE "FOLDING FRAME")**	1
1	1-512-010002-16	NUT,3/4-16 HEX,SLFLKG, GRC	2
2	1-512-010005-09	NUT,HEX,SLFLKG, 1/2-13 GRB	6
3	1-512-010005-13	NUT,HEX SLFLKG GRB 5/8-11	2
4	1-512-010005-15	NUT,HEX,SLFLKG GRB 3/4-10	1
5	1-512-010005-19	NUT 1-8 HEX SLF-LOCKING GRB	3
6	1-654-010059-14	SCREW HX CP,5/8-11UNCX4-1/2G5	1
7	1-654-010061-13	SCREW,HX CP 3/4-10UNCX4 GR5	1
8	1-655-010001-05	SCREW,FLG HD 1/2-13X2 GR8 ZP	6
9	138567	SCREW,HX CP 5/8-11UNCX3-1/2G8	1
10	141251	SPRING PIN,SLOTTED 1/2X2-1/4	2
11	144457	PIN, SHANK **(1-1/4 X 7-1/4)**	2
12	150244	BUSHING,CNX-5/8 X 3/4 X 1-1/4	1
13	172581	SCREW HEX CAP 1-8UNCX9.5 GR8	1
14	195566	WASHER THRUST 1-3/4 14 GA	2
15	210879	BEARING-HEF, 2.004X1.76X1-1/2	2
16	218785	SPRING-CLAMP, SHANK, ASSY	1
17	221412	GATE-CLAMP WLDMT	1
18	239516	SCREW, HXCP 3/4-16UNFX10 GR8	2
19	240314	SHANK MOUNT, 1-1/4, WLDMT	1
20	240317	PIN, SHANK PIVOT 1-3/4 DIA	1
21	240342	BUSHING,SPRG 2 X 1-3/4 X 1-1/2	2
22	241980	CAP, BEARING STEEL 1-3/4 PIN	2
23	243128	CLAMP, SHANK WLDMT	1
24	622-3511-008	WASHER, FLAT 3/4 MIL-CARB SAE	2
25	207142	DECAL, DANGER STUCK SHANK	1
26	2-573-010469	DECAL, DANGER SPRING	1

Auto Reset Shank Clamp, Spring - Setback (01/16/23 TO 01/01/24)

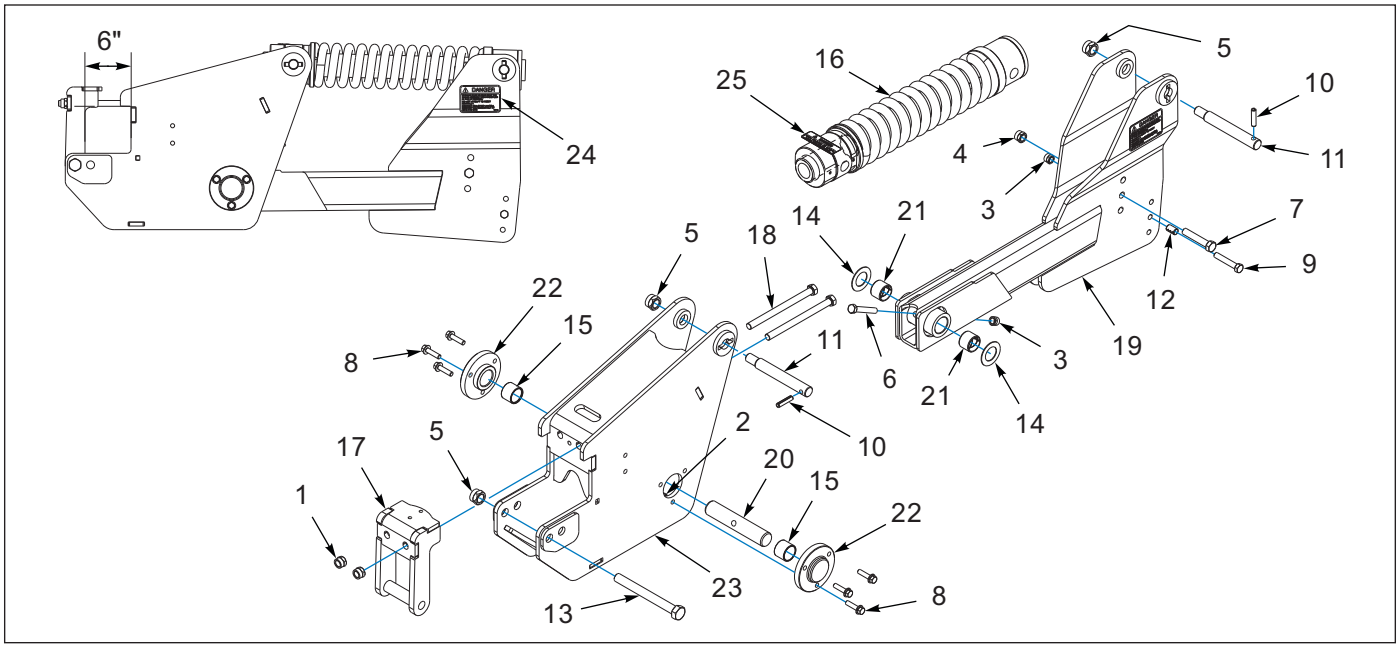

Figure 1-8: 2512 Auto Reset Shank Clamp, Spring - Setback (01/16/2023 TO 01/01/2024)

Auto Reset Shank Clamp, Spring - Setback (01/16/23 TO 01/01/24)

ITEM	PART NUMBER	DESCRIPTION	QTY.
	242821	CLAMP-SHANK, SETBACK, ASM **(INCLUDES ITEMS 1-23)** **(FOR CYL. STOP USED W/CLAMP TYPE, SEE "FOLDING FRAME")**	1
1	1-512-010002-16	NUT,3/4-16 HEX,SLFLKG, GRC	2
2	1-512-010005-09	NUT,HEX,SLFLKG, 1/2-13 GRB	6
3	1-512-010005-13	NUT,HEX SLFLKG GRB 5/8-11	2
4	1-512-010005-15	NUT,HEX,SLFLKG GRB 3/4-10	1
5	1-512-010005-19	NUT 1-8 HEX SLF-LOCKING GRB	3
6	1-654-010059-13	SCREW HEX CAP 5/8-11X4UNC GR5	1
7	1-654-010061-13	SCREW,HX CP 3/4-10UNCX4 GR5	1
8	1-655-010001-05	SCREW,FLG HD 1/2-13X2 GR8 ZP	6
9	138567	SCREW,HX CP 5/8-11UNCX3-1/2G8	1
10	141251	SPRING PIN,SLOTTED 1/2X2-1/4	2
11	144457	PIN, SHANK **(1-1/4 X 7-1/4)**	2
12	150244	BUSHING,CNX-5/8 X 3/4 X 1-1/4	1
13	172581	SCREW HEX CAP 1-8UNCX9.5 GR8	1
14	195566	WASHER THRUST 1-3/4 14 GA	2
15	210879	BEARING-HEF, 2.004X1.76X1-1/2	2
16	218785	SPRING-CLAMP, SHANK, ASSY	1
17	221412	GATE-CLAMP WLDMT	1
18	239516	SCREW, HXCP 3/4-16UNFX10 GR8	2
19	240314	SHANK MOUNT, 1-1/4, WLDMT	1
20	240317	PIN, SHANK PIVOT 1-3/4 DIA	1
21	240342	BUSHING,SPRG 2 X 1-3/4 X 1-1/2	2
22	241980	CAP, BEARING STEEL 1-3/4 PIN	2
23	242817	CLAMP-SHANK, SETBACK, WLDMNT	1
24	207142	DECAL, DANGER STUCK SHANK	1
25	2-573-010469	DECAL, DANGER SPRING	1

Auto Reset Shank Clamp, Spring (BEF. 01/16/2023)

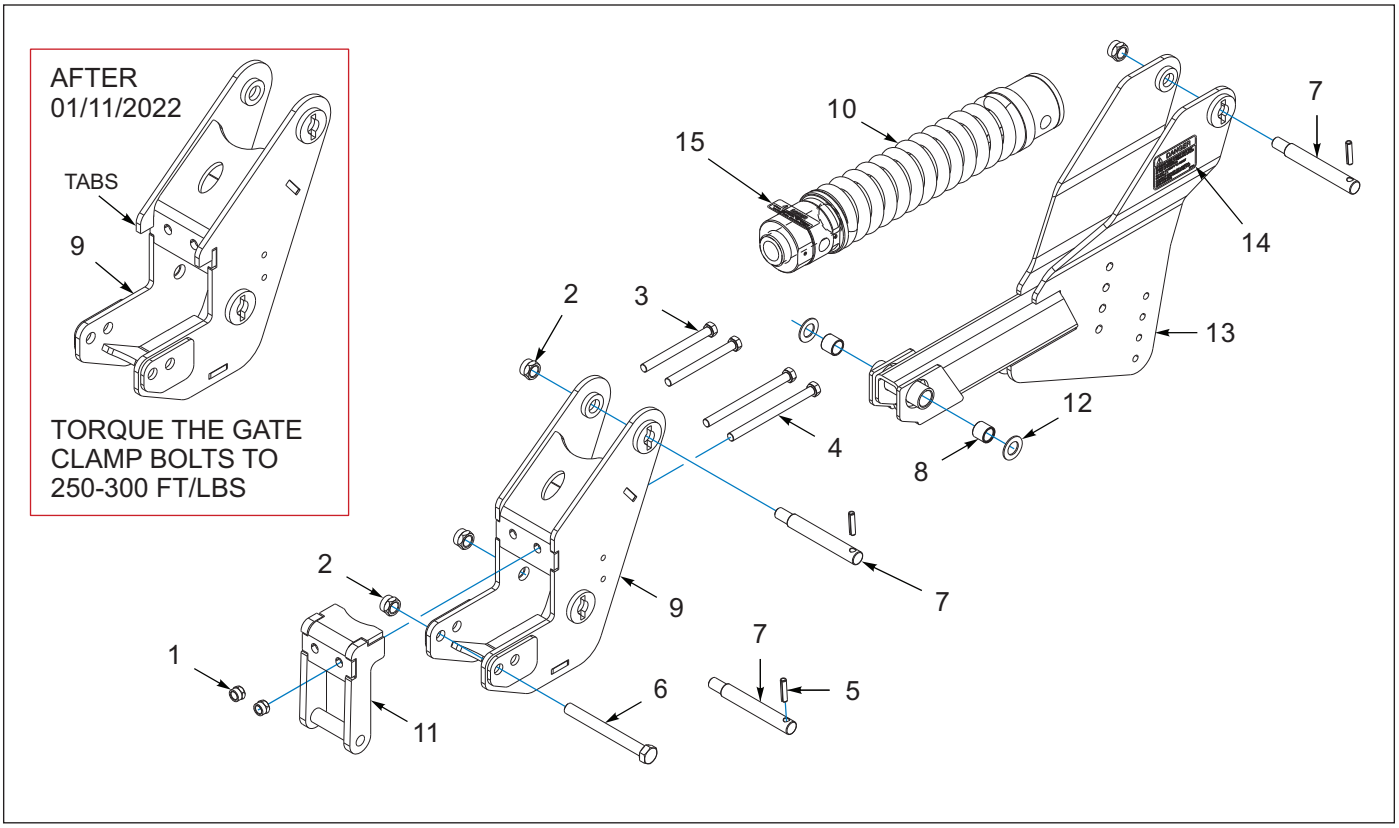

Figure 1-9: Auto Reset Shank Clamp, Spring (BEFORE 01/16/2023)

Auto Reset Shank Clamp, Spring (BEF. 01/16/2023)

ITEM	PART NUMBER	DESCRIPTION	QTY. 6X4 Tool Bar	QTY. 6X6 Tool Bar
	214397	CLAMP-SHANK, ASSY **(INCLUDES ITEMS 1-13) (FOR CYL. STOP USED W/CLAMP TYPE, SEE "FOLDING FRAME")**	1	1
1	1-512-010005-15	NUT,HEX,SLFLKG GRB 3/4-10	2	2
2	1-512-010005-19	NUT 1-8 HEX SLF-LOCKING GRB	4	4
3	162249	SCREW, HX CP,3/4-10UNCX8 GR8 **(AFT. 01/11/2022)**	2	- -
3	1-654-010061-21	SCREW,HXCP 3/4-10UNCX10GR5 **(BEF. 01/11/2022)**	2	- -
4	1-654-010032-25	SCREW HX CP 3/4-10X10 GR8 **(AFT. 01/11/2022)**	- -	2
4	1-654-010061-25	SCREW,HXCP 3/4-10UNCX10GR5 **(BEF. 01/11/2022)**	- -	2
5	141251	SPRING PIN,SLOTTED 1/2X2-1/4	3	3
6	172581	SCREW HEX CAP 1-8UNCX9.5 GR8	1	1
7	144457	PIN, SHANK **(1-1/4 X 7-1/4) (AFTER 09/01/2021)**	3	3
7	210887	PIN, 1-1/4 X 7-1/4, STEP **(BEFORE 09/01/2021)**	3	3
8	217196	BEARING-HEF,1.5 X 1.25 X 1.3	2	2
9	217969	CLAMP-SHANK, 6X6 TOOLBAR,WLDMT	1	1
10	218785	SPRING-CLAMP, SHANK, ASSY	1	1
11	221412	GATE-CLAMP WLDMT	1	1
12	221428	WASHER-2-1/4OD,1-1/4ID,1/8UHMW	2	2
13	221433	CLAMP-SHANK, 1-1/4, WLDMT	1	1
14	207142	DECAL, DANGER STUCK SHANK	1	1
15	2-573-010469	DECAL, DANGER SPRING	1	1

Auto Reset Shank Clamp, Spring - Setback (BEF. 01/16/2023)

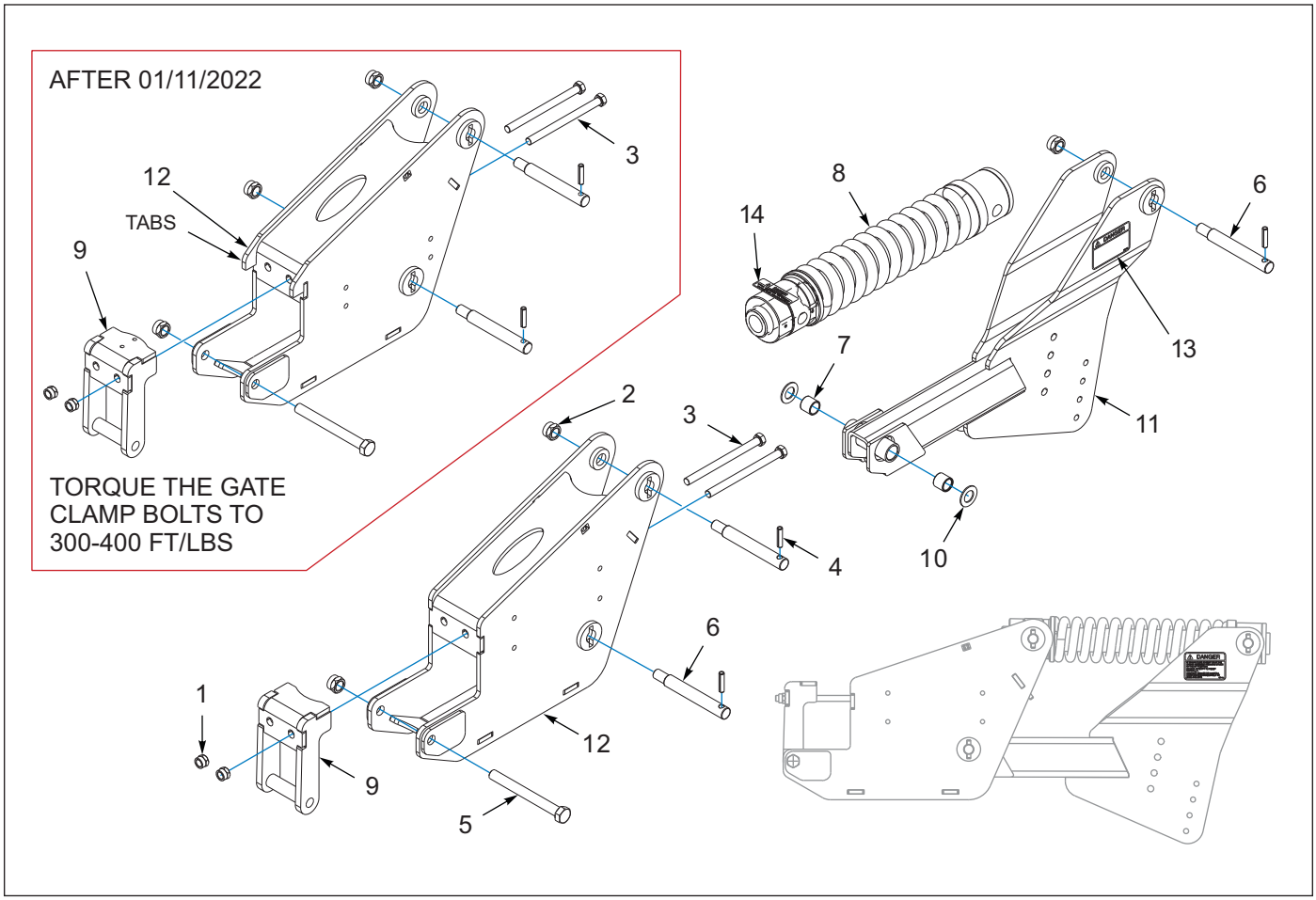

Figure 1-10: 2512 Auto Reset Shank Clamp, Spring - Setback (BEFORE 01/16/2023)

Auto Reset Shank Clamp, Spring - Setback (BEF. 01/16/2023)

ITEM	PART NUMBER	DESCRIPTION	QTY.
	221445	CLAMP-SHANK, SETBACK, ASSY **(INCLUDES ITEMS 1-12)** **(FOR CYL. STOP USED W/CLAMP TYPE, SEE "FOLDING FRAME")**	1
1	1-512-010005-15	NUT,HEX,SLFLKG GRB 3/4-10	2
2	1-512-010005-19	NUT 1-8 HEX SLF-LOCKING GRB	4
3	1-654-010032-25	SCREW HX CP 3/4-10X10 GR8 **(AFTER 01/11/2022)**	2
3	1-654-010061-25	SCREW,HX CP 3/4-10UNCX10 GR5 **(BEFORE 01/11/2022)**	2
4	141251	SPRING PIN,SLOTTED 1/2X2-1/4	3
5	172581	SCREW HEX CAP 1-8UNCX9.5 GR8	1
6	144457	PIN, SHANK **(1-1/4 X 7-1/4) (AFTER 09/01/2021)**	3
6	210887	PIN, 1-1/4 X 7-1/4, STEP **(BEFORE 09/01/2021)**	3
7	217196	BEARING-HEF,1.5 X 1.25 X 1.3	2
8	218785	SPRING-CLAMP, SHANK, ASSY	1
9	221412	GATE-CLAMP WLDMT	1
10	221428	WASHER-2-1/4OD,1-1/4ID,1/8UHMW	2
11	221433	CLAMP-SHANK, 1-1/4, WLDMT	1
12	221441	CLAMP-SHANK, SETBACK, WLDMT	1
13	207142	DECAL, DANGER STUCK SHANK	1
14	2-573-010469	DECAL, DANGER SPRING	1

Auto Reset Shank Clamp, Hydraulic (AFT. 02/07/2025)

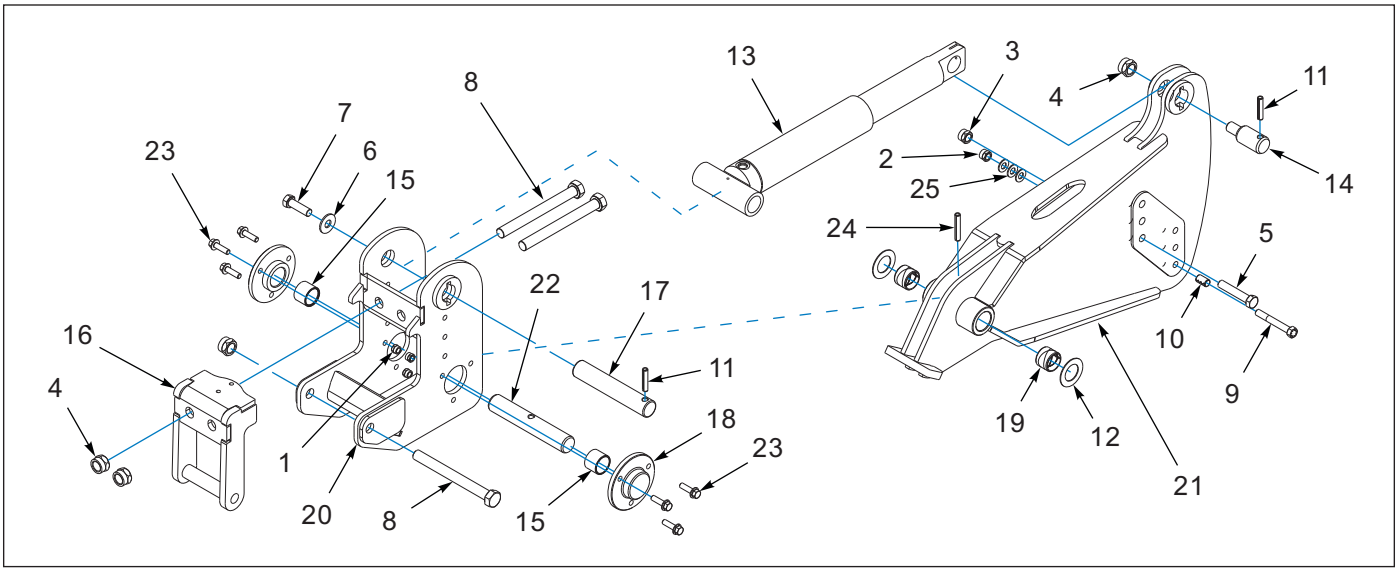

Figure 1-11: Auto Reset Shank Clamp, Hydraulic (AFT. 02/07/2025)

Auto Reset Shank Clamp, Hydraulic (AFT. 02/07/2025)

ITEM	PART NUMBER	DESCRIPTION	QTY.
	242824	CLAMP-SHANK, ASSY **(INCLUDES ITEMS 1-24)**	1
		(FOR CYL. STOP USED W/CLAMP TYPE, SEE "FOLDING FRAME")	
1	1-512-010005-19	NUT 1-8 HEX SLF-LOCKING GRB	6
2	1-512-010005-13	NUT,HEX SLFLKG GRB 5/8-11	1
3	1-512-010005-15	NUT,HEX,SLFLKG GRB 3/4-10	1
4	1-512-010005-19	NUT 1-8 HEX SLF-LOCKING GRB	4
5	1-654-010061-13	SCREW,HX CP 3/4-10UNCX4 GR5	1
6	1-861-010032-21	WASHER, FLAT 3/4 W ZP/CD	1
7	104483	SCREW 3/4-10X2-1/2 HXCP ZPGR8	1
8	134964	SCREW,HEX CAP,1-8UNCX10, GR8	3
9	253822	SCREW HEX CAP,5/8-11X4-1/2,GR9 **(AFTER 01/20/2026)**	1
9	122962	SCREW, HEX CP 5/8-11X4-1/2GR8 **(06/2025 TO 01/2026)**	1
9	172829	SCREW HX CP 5/8-11X4 GR8 **(BEFORE 06/05/2025)**	1
10	150244	BUSHING,CNX-5/8 X 3/4 X 1-1/4	1
11	172802	PIN SPRING SLOTTED 1/2X2-1/2	2
12	195566	WASHER THRUST 1-3/4 14 GA	2
13	209372	CYLINDER-SA,3 X 9-1/2 DISP **(SEE PAGE 4-22)**	1
14	210874	PIN, 1-3/4 X 2-5/16, STEP	1
15	210879	BEARING-HEF, 2.004X1.76X1-1/2	2
16	218755	GATE-CLAMP WLDMT	1
17	239243	PIN-PIVOT, SHANK, 1-3/4 X 9	1
18	239522	CAP, CASTING MACHINED	2
19	240342	BUSHING,SPRG 2 X 1-3/4 X 1-1/2	2
20	242823	MOUNT-SHANK CLAMP, WELDMENT	1
21	242825	CLAMP-SHANK, 1-1/4, WELDMENT	1
22	242827	PIN-PIVOT, SHANK, 1-3/4 DIA	1
23	243054	SCREW FLG HD 1/2-13X1-3/4 GR8	6
24	5D979	ROLL PIN 1/2 X 3	1
25	1-861-010032-18	WASHER, FLAT 5/8 N ZP/CD **(AFTER 06/05/2025)**	3

Auto Reset Shank Clamp, Hydraulic - Setback (AFT. 02/07/2025)

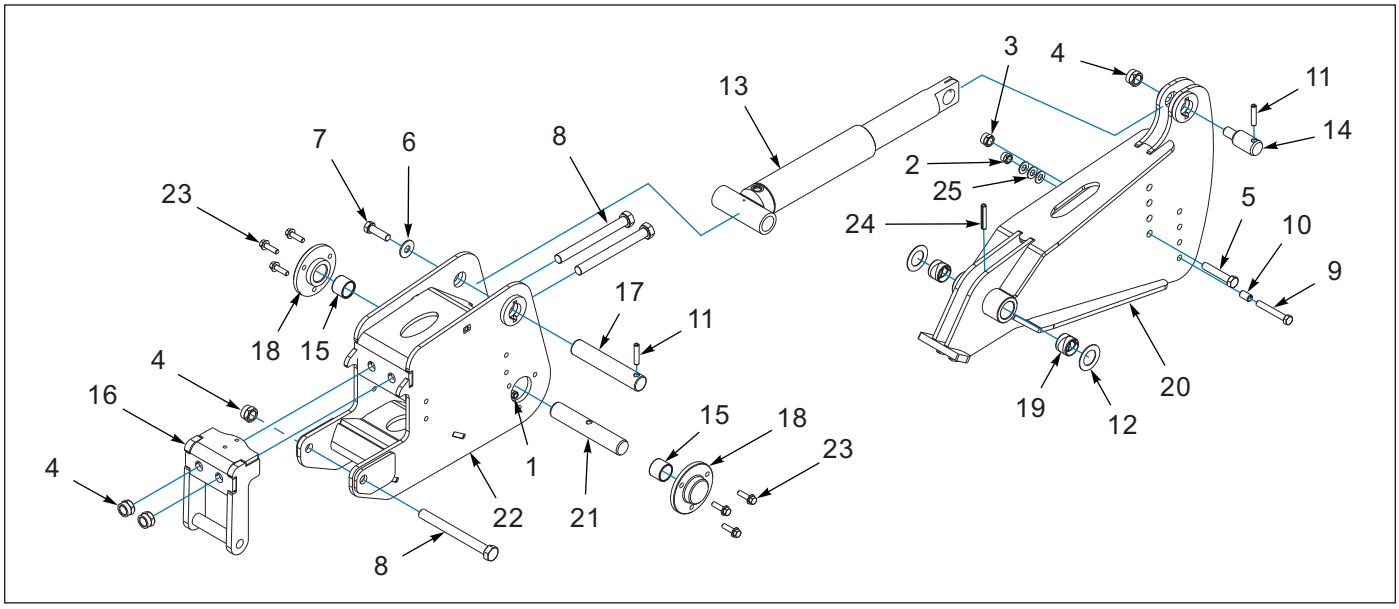

Figure 1-12: Auto Reset Shank Clamp, Hydraulic - Setback (AFT. 02/07/2025)

Auto Reset Shank Clamp, Hydraulic - Setback (AFT. 02/07/2025)

ITEM	PART NUMBER	DESCRIPTION	QTY.
	242850	CLAMP-SHANK, SEBTACK, ASM **(FOR CYL. STOP USED W/CLAMP TYPE, SEE "FOLDING FRAME")**	1
1	1-512-010005-09	NUT,HEX,SLFLKG, 1/2-13 GRB	6
2	1-512-010005-13	NUT,HEX SLFLKG GRB 5/8-11	1
3	1-512-010005-15	NUT,HEX,SLFLKG GRB 3/4-10	1
4	1-512-010005-19	NUT 1-8 HEX SLF-LOCKING GRB	4
5	1-654-010061-13	SCREW,HX CP 3/4-10UNCX4 GR5	1
6	1-861-010032-21	WASHER, FLAT 3/4 W ZP/CD	1
7	104483	SCREW 3/4-10X2-1/2 HXCP ZPGR8	1
8	134964	SCREW,HEX CAP,1-8UNCX10, GR8	3
9	122962	SCREW, HEX CP 5/8-11X4-1/2GR8 **(AFTER 06/05/2025)**	1
9	138567	SCREW,HX CP 5/8-11UNCX3-1/2G8 **(BEFORE 06/05/2025)**	1
10	150244	BUSHING,CNX-5/8 X 3/4 X 1-1/4	1
11	172802	PIN SPRING SLOTTED 1/2X2-1/2	2
12	195566	WASHER THRUST 1-3/4 14 GA	2
13	209372	CYLINDER-SA,3 X 9-1/2 DISP **(SEE PAGE 4-22)**	1
14	210874	PIN, 1-3/4 X 2-5/16, STEP	1
15	210879	BEARING-HEF, 2.004X1.76X1-1/2	2
16	218755	GATE-CLAMP WLDMT	1
17	239243	PIN-PIVOT, SHANK, 1-3/4 X 9	1
18	239522	CAP, CASTING MACHINED	2
19	240342	BUSHING,SPRG 2 X 1-3/4 X 1-1/2	2
20	242825	CLAMP-SHANK, 1-1/4, WELDMENT	1
21	242827	PIN-PIVOT, SHANK, 1-3/4 DIA	1
22	242849	MOUNT-SHANK, CLAMP, WELDMENT	1
23	243054	SCREW FLG HD 1/2-13X1-3/4 GR8	6
24	5D979	ROLL PIN 1/2 X 3	1
25	1-861-010032-18	WASHER, FLAT 5/8 N ZP/CD **(AFTER 06/05/2025)**	3

Auto Reset Shank Clamp, Hydraulic (12/12/23 TO 02/07/25)

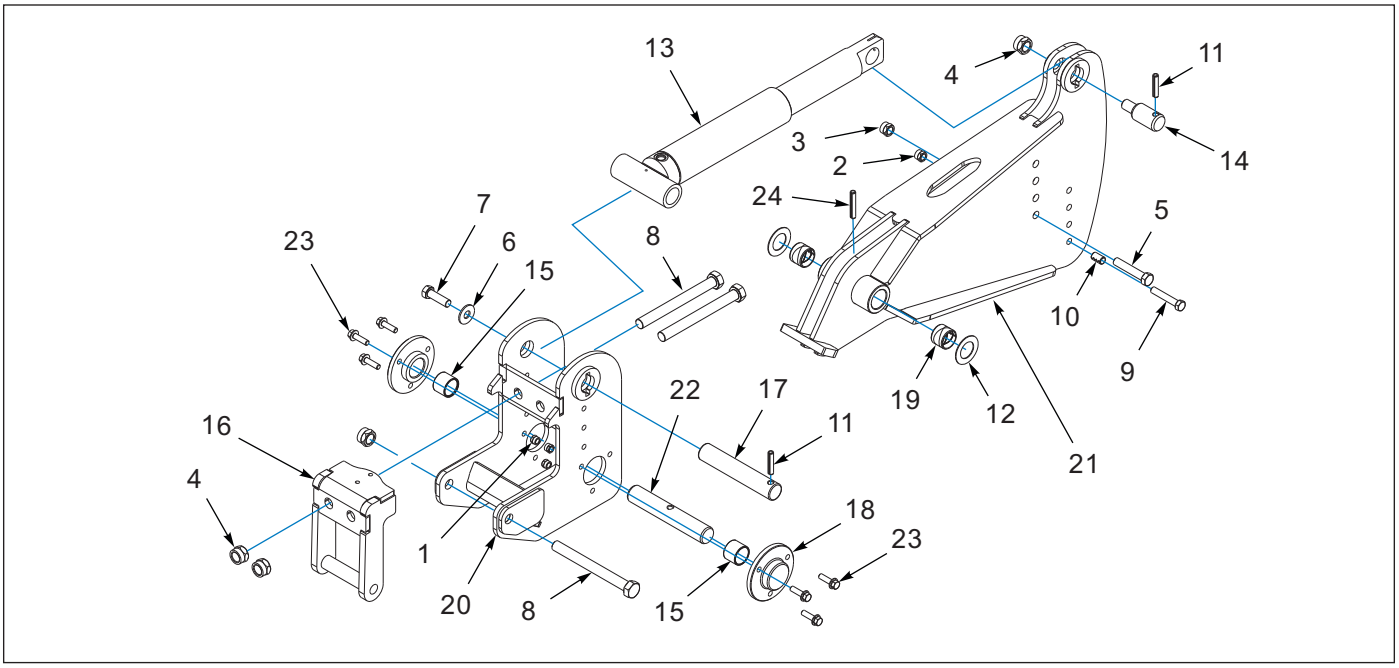

Figure 1-13: Auto Reset Shank Clamp, Hydraulic (12/12/23 TO 02/07/25)

Auto Reset Shank Clamp, Hydraulic (12/12/23 TO 02/07/25)

ITEM	PART NUMBER	DESCRIPTION	QTY.
	242824	CLAMP-SHANK, ASSY **(INCLUDES ITEMS 1-24)**	1
		(FOR CYL. STOP USED W/CLAMP TYPE, SEE "FOLDING FRAME")	
1	1-512-010005-19	NUT 1-8 HEX SLF-LOCKING GRB	6
2	1-512-010005-13	NUT,HEX SLFLKG GRB 5/8-11	1
3	1-512-010005-15	NUT,HEX,SLFLKG GRB 3/4-10	1
4	1-512-010005-19	NUT 1-8 HEX SLF-LOCKING GRB	4
5	1-654-010061-13	SCREW,HX CP 3/4-10UNCX4 GR5	1
6	1-861-010032-21	WASHER, FLAT 3/4 W ZP/CD	1
7	104483	SCREW 3/4-10X2-1/2 HXCP ZPGR8	1
8	134964	SCREW,HEX CAP,1-8UNCX10, GR8	3
9	138567	SCREW,HX CP 5/8-11UNCX3-1/2G8	1
10	150244	BUSHING,CNX-5/8 X 3/4 X 1-1/4	1
11	172802	PIN SPRING SLOTTED 1/2X2-1/2	2
12	195566	WASHER THRUST 1-3/4 14 GA	2
13	209372	CYLINDER-SA,3 X 9-1/2 DISP **(SEE PAGE 4-22)**	1
14	210874	PIN, 1-3/4 X 2-5/16, STEP	1
15	210879	BEARING-HEF, 2.004X1.76X1-1/2	2
16	218755	GATE-CLAMP WLDMT	1
17	239243	PIN-PIVOT, SHANK, 1-3/4 X 9	1
18	239522	CAP, CASTING MACHINED	2
19	240342	BUSHING,SPRG 2 X 1-3/4 X 1-1/2	2
20	242823	MOUNT-SHANK CLAMP, WELDMENT	1
21	242825	CLAMP-SHANK, 1-1/4, WELDMENT	1
22	242827	PIN-PIVOT, SHANK, 1-3/4 DIA	1
23	243054	SCREW FLG HD 1/2-13X1-3/4 GR8	6
24	5D979	ROLL PIN 1/2 X 3	1

Auto Reset Shank Clamp, Hydraulic - Setback (12/12/23 TO 02/07/25)

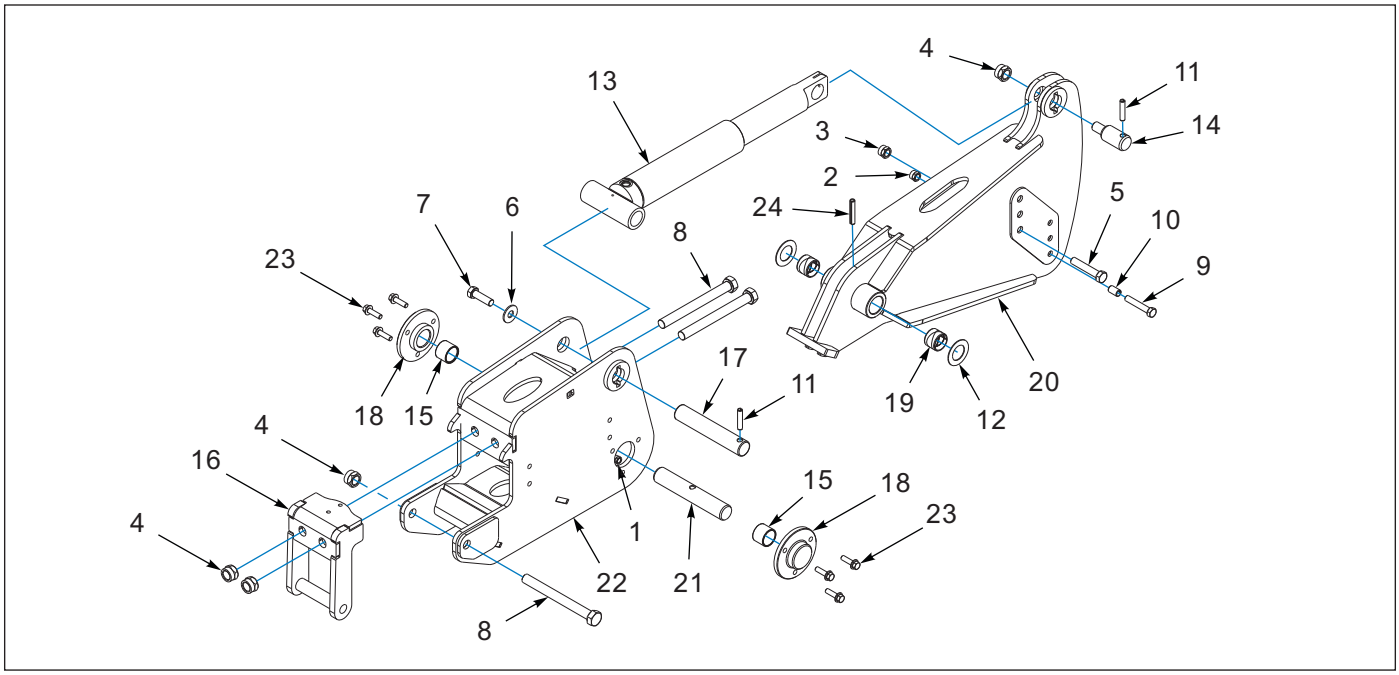

Figure 1-14: Auto Reset Shank Clamp, Hydraulic - Setback (12/12/23 TO 02/07/25)

Auto Reset Shank Clamp, Hydraulic - Setback (12/12/23 TO 02/07/25)

ITEM	PART NUMBER	DESCRIPTION	QTY.
	242850	CLAMP-SHANK, SEBTACK, ASM **(FOR CYL. STOP USED W/CLAMP TYPE, SEE “FOLDING FRAME”)**	1
1	1-512-010005-09	NUT,HEX,SLFLKG, 1/2-13 GRB	6
2	1-512-010005-13	NUT,HEX SLFLKG GRB 5/8-11	1
3	1-512-010005-15	NUT,HEX,SLFLKG GRB 3/4-10	1
4	1-512-010005-19	NUT 1-8 HEX SLF-LOCKING GRB	4
5	1-654-010061-13	SCREW,HX CP 3/4-10UNCX4 GR5	1
6	1-861-010032-21	WASHER, FLAT 3/4 W ZP/CD	1
7	104483	SCREW 3/4-10X2-1/2 HXCP ZPGR8	1
8	134964	SCREW,HEX CAP,1-8UNCX10, GR8	3
9	172829	SCREW HX CP 5/8-11X4 GR8	1
10	150244	BUSHING,CNX-5/8 X 3/4 X 1-1/4	1
11	172802	PIN SPRING SLOTTED 1/2X2-1/2	2
12	195566	WASHER THRUST 1-3/4 14 GA	2
13	209372	CYLINDER-SA,3 X 9-1/2 DISP **(SEE PAGE 4-22)**	1
14	210874	PIN, 1-3/4 X 2-5/16, STEP	1
15	210879	BEARING-HEF, 2.004X1.76X1-1/2	2
16	218755	GATE-CLAMP WLDMT	1
17	239243	PIN-PIVOT, SHANK, 1-3/4 X 9	1
18	239522	CAP, CASTING MACHINED	2
19	240342	BUSHING,SPRG 2 X 1-3/4 X 1-1/2	2
20	242825	CLAMP-SHANK, 1-1/4, WELDMENT	1
21	242827	PIN-PIVOT, SHANK, 1-3/4 DIA	1
22	242849	MOUNT-SHANK, CLAMP, WELDMENT	1
23	243054	SCREW FLG HD 1/2-13X1-3/4 GR8	6
24	5D979	ROLL PIN 1/2 X 3	1

Auto Reset Shank Clamp, Hydraulic (BEF. 12/12/2023)

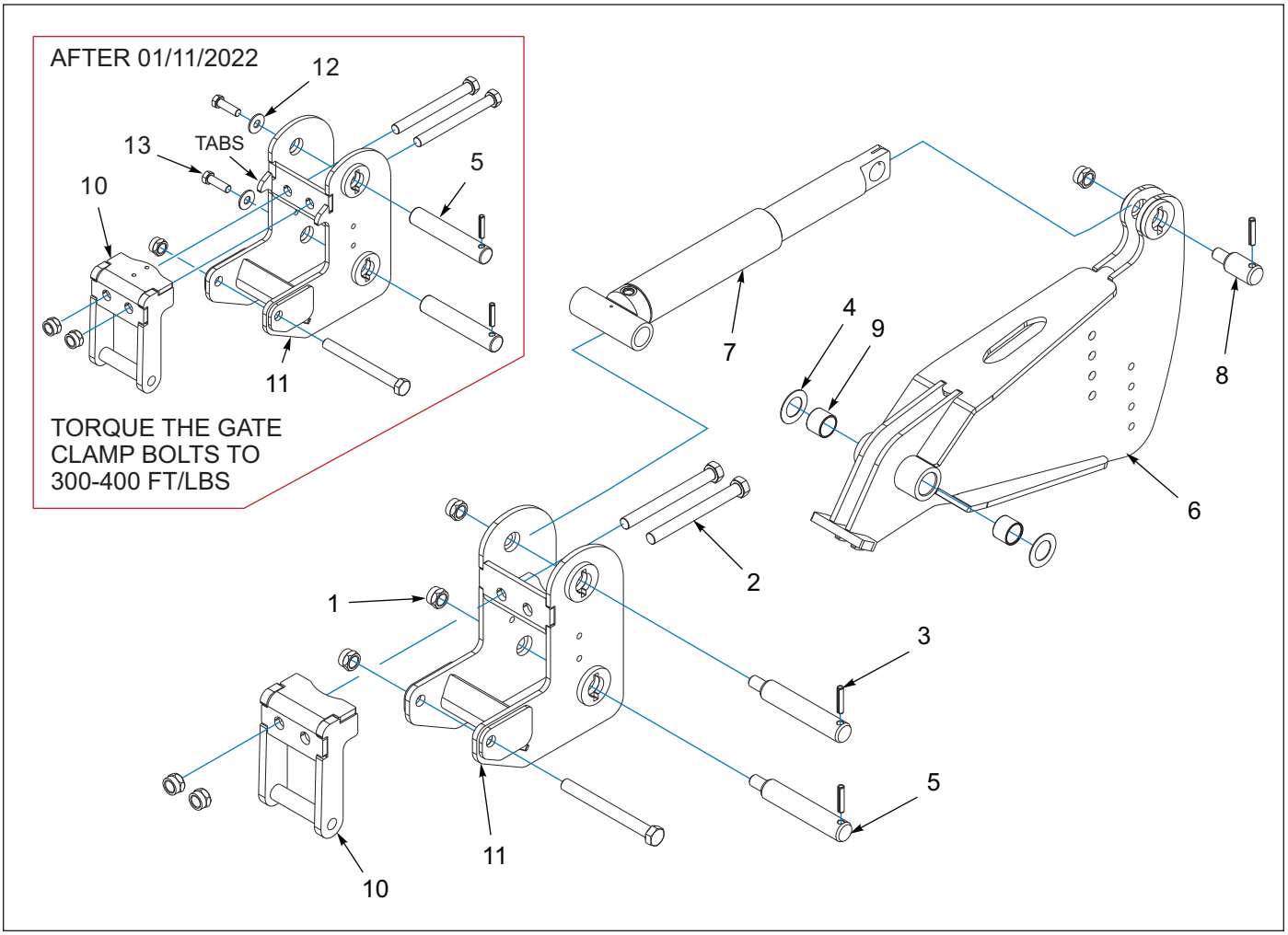

Figure 1-15: Auto Reset Shank Clamp, Hydraulic (BEF. 12/12/2023)

Auto Reset Shank Clamp, Hydraulic (BEF. 12/12/2023)

ITEM	PART NUMBER	DESCRIPTION	QTY.
	209370	CLAMP-SHANK, ASSY **(FOR CYL. STOP USED W/CLAMP TYPE, SEE "FOLDING FRAME")**	1
1	1-512-010005-19	NUT 1-8 HEX SLF-LOCKING GRB **(BEFORE 01/11/2022, QTY=6)**	4
2	134964	SCREW,HEX CAP,1-8UNCX10, GR8	3
3	172802	PIN SPRING SLOTTED 1/2X2-1/2	3
4	195566	WASHER THRUST 1-3/4 14 GA	2
5	239243	PIN-PIVOT, SHANK, 1-3/4 X 9 **(AFTER 01/11/2022)**	2
5	209252	PIN, 1-3/4 X 8-1/4, STEP **(BEFORE 01/11/2022)**	2
6	209367	CLAMP-SHANK 1-1/4 WLDMT	1
7	209372	CYLINDER-SA,3 X 9-1/2 DISP **(SEE PAGE 4-22)**	1
8	210874	PIN, 1-3/4 X 2-5/16, STEP	1
9	210879	BEARING-HEF, 2.004X1.76X1-1/2	2
10	218755	GATE-CLAMP WLDMT	1
11	221434	MOUNT-SHANK CLAMP, WELDMENT	1
12	1-861-010032-21	WASHER, FLAT 3/4 W ZP/CD **(AFTER 01/11/2022)**	2
13	104483	SCREW 3/4-10X2-1/2 HXCP ZPGR8 **(AFTER 01/11/2022)**	2

Auto Reset Shank Clamp, Hydraulic - Setback (BEF. 12/12/2023)

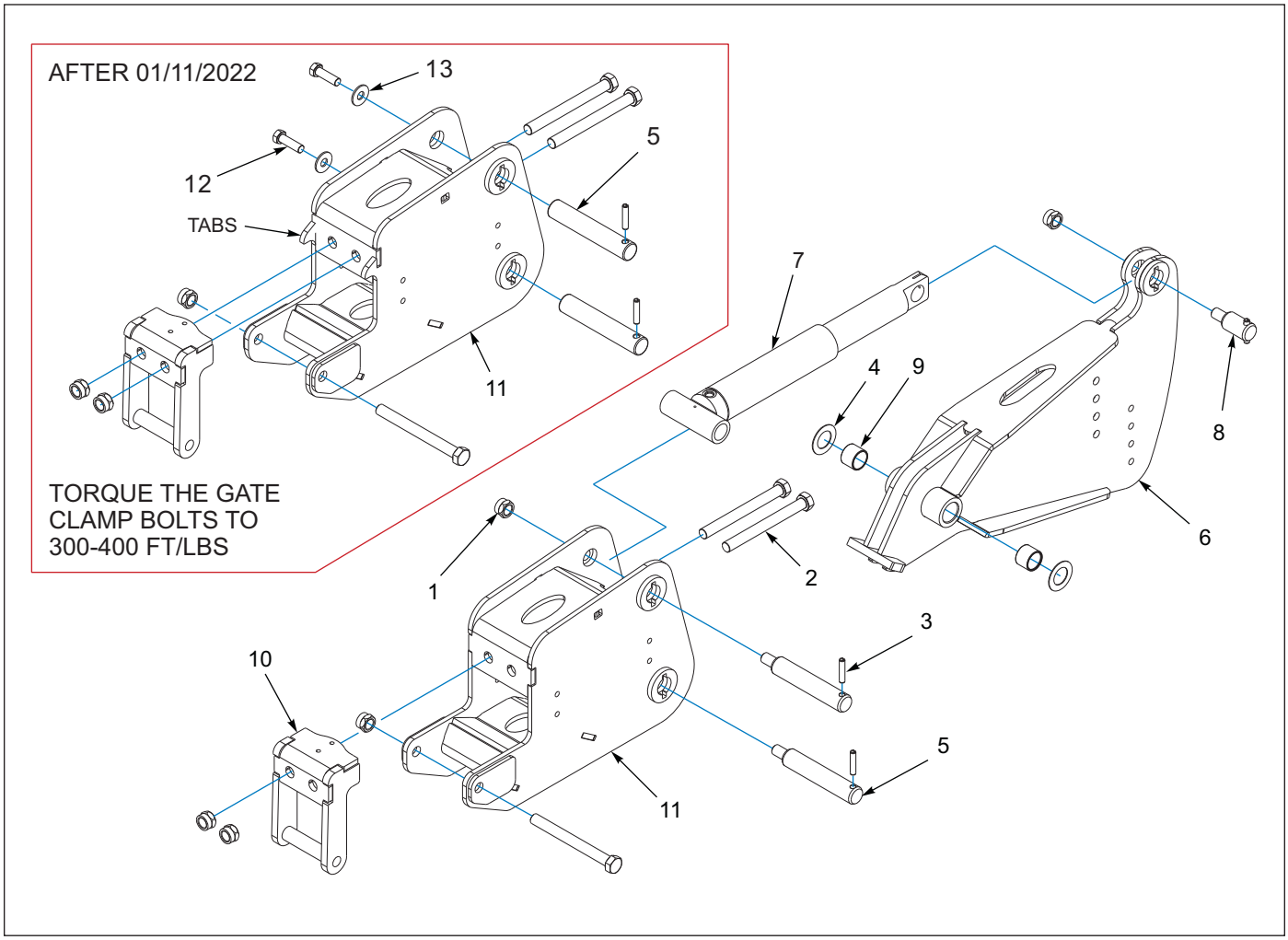

Figure 1-16: Auto Reset Shank Clamp, Hydraulic - Setback (BEF. 12/12/2023)

Auto Reset Shank Clamp, Hydraulic - Setback (BEF. 12/12/2023)

ITEM	PART NUMBER	DESCRIPTION	QTY.
	214375	CLAMP-SHANK, SETBACK, ASSY **(FOR CYL. STOP USED W/CLAMP TYPE, SEE "FOLDING FRAME")**	1
1	1-512-010005-19	NUT 1-8 HEX SLF-LOCKING GRB **(BEFORE 01/11/2022, QTY=6)**	4
2	134964	SCREW,HEX CAP,1-8UNCX10, GR8	3
3	172802	PIN SPRING SLOTTED 1/2X2-1/2	3
4	195566	WASHER THRUST 1-3/4 14 GA	2
5	239243	PIN-PIVOT, SHANK, 1-3/4 X 9 **(AFTER 01/11/2022)**	2
5	209252	PIN, 1-3/4 X 8-1/4, STEP **(BEFORE 01/11/2022)**	2
6	209367	CLAMP-SHANK 1-1/4 WLDMT	1
7	209372	CYLINDER-SA,3 X 9-1/2 DISP **(SEE PAGE 4-22)**	1
8	210874	PIN, 1-3/4 X 2-5/16, STEP	1
9	210879	BEARING-HEF, 2.004X1.76X1-1/2	2
10	218755	GATE-CLAMP WLDMT	1
11	221438	MOUNT-SHANK CLAMP, WLDMT **(SETBACK)**	1
12	104483	SCREW 3/4-10X2-1/2 HXCP ZP8 **(AFTER 01/11/2022)**	2
13	1-861-010032-21	WASHER, FLAT 3/4 W ZP/CD **(AFTER 01/11/2022)**	2

RSB Shank Clamp Assembly (Rigid Shear Bolt)

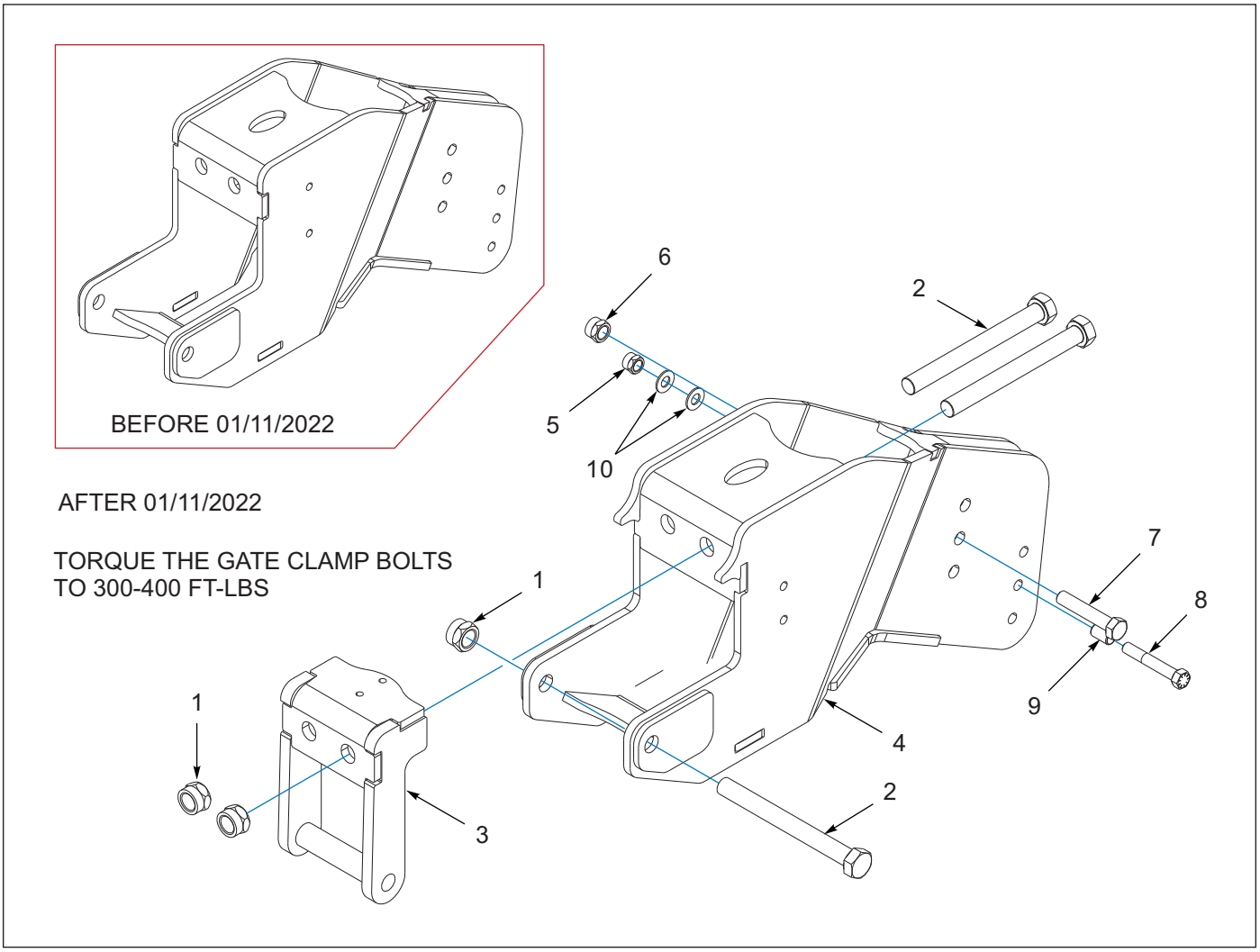

Figure 1-17: RSB Shank Clamp Assembly (Rigid Shear Bolt)

RSB Shank Clamp Assembly (Rigid Shear Bolt)

ITEM	PART NUMBER	DESCRIPTION	QTY.
	218760	CLAMP-SHANK,RIGID, ASSY **(ITEMS 5-9, ADDED TO ASM 04/12/2024)** **(FOR CYL. STOP USED W/CLAMP TYPE, SEE "FOLDING FRAME")**	1
1	1-512-010005-19	NUT 1-8 HEX SLF-LOCKING GRB	3
2	134964	SCREW,HEX CAP,1-8UNCX10, GR8	3
3	218755	GATE-CLAMP WLDMT	1
4	218757	CLAMP-SHANK,RIGID,WLDMT	1
5	1-512-010005-13	NUT,HEX SLFLKG GRB 5/8-11	1
6	1-512-010005-15	NUT,HEX,SLFLKG GRB 3/4-10	1
7	1-654-010061-13	SCREW,HX CP 3/4-10UNCX4 GR5	1
8	253721	SCREW HEX CAP,5/8-11UNC-4,GR9 **(AFTER 01/20/2026)**	1
8	172829	SCREW HX CP 5/8-11X4 GR8 **(06/2025 TO 01/2026)**	1
8	138567	SCREW,HX CP 5/8-11UNCX3-1/2G8 **(BEFORE 06/05/2025)**	1
9	150244	BUSHING,CNX-5/8 X 3/4 X 1-1/4	1
10	1-861-010032-18	WASHER, FLAT 5/8 N ZP/CD **(06/05/2025 TO 01/2026, QTY=3)**	2

Table provided for general use.

NOTES:

Jack Stand and Wing Rest (AFTER 06/07/2023)

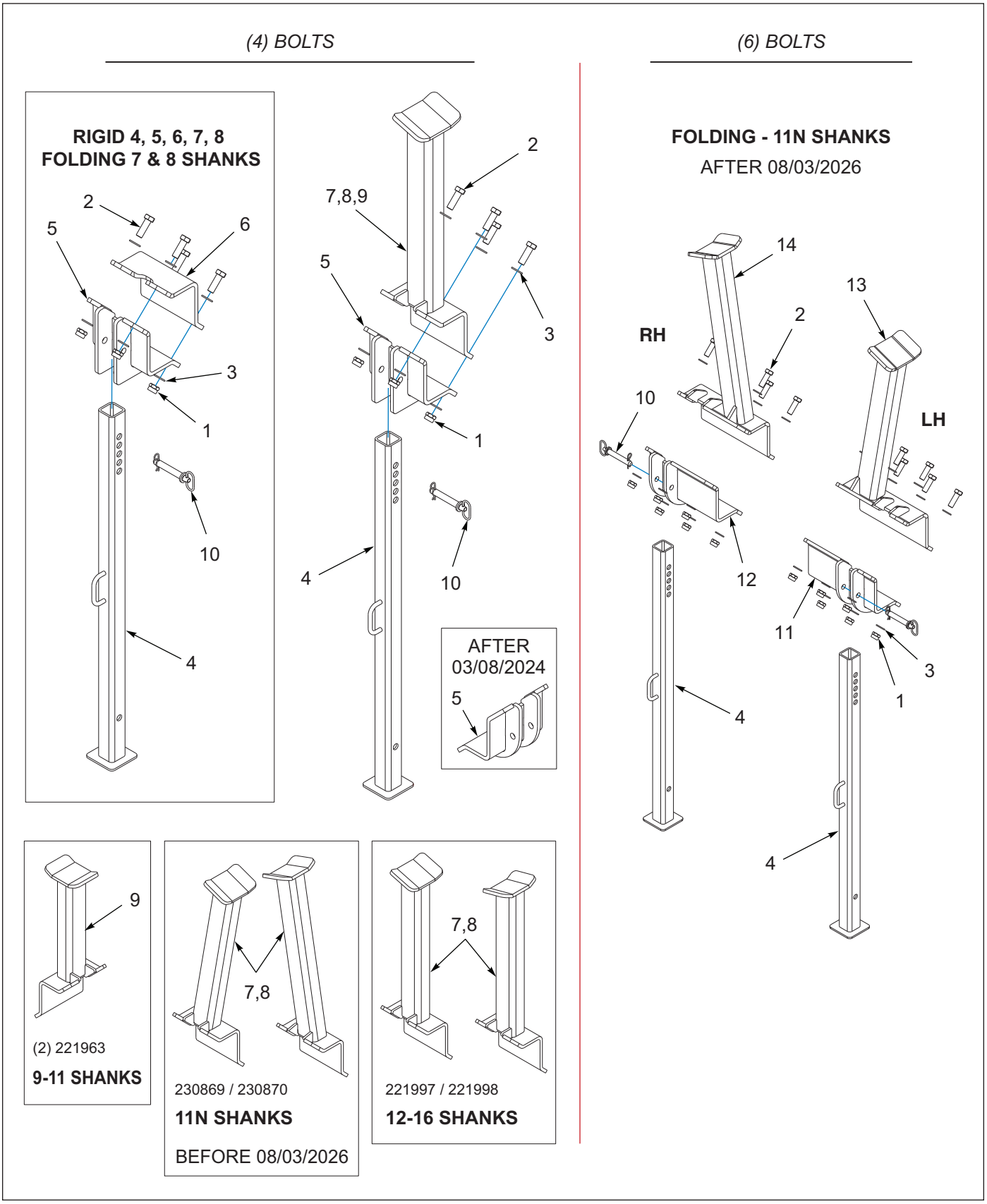

Figure 1-18: 2512 Jack Stand and Wing Rest (AFTER 06/07/2023)

Jack Stand and Wing Rest (AFTER 06/07/2023)

ITEM	PART NUMBER	DESCRIPTION	QTY.
1	1-512-010005-15	NUT,HEX,SLFLKG GRB 3/4-10 **(PER MODEL)**	- -
2	1-654-010061-06	SCREW,HXCP,3/4-10UNCX2-1/4GR5 **(PER MODEL)**	- -
3	1-861-010032-20	WASHER, FLAT,3/4 N ZP/CD **(PER MODEL, 2 PER BOLT)**	- -
4	221990	JACK STAND WLDMT	2
5	221993	MOUNT-JACK STAND, WLDMT	2
6	222015	CAP-BRACKET,JACK MOUNT **(RIGID FRAME - ALL CLAMP TYPES)** **(FOLDING 7 & 8 SHANKS - ALL CLAMP TYPES)**	2
7	221997	REST-WING, LH, WLDMT **(12-16 SHANKS - ALL CLAMP TYPES)**	1
7	230869	REST-WING, LH, WLDMT **(11N SHANKS - ALL CLAMP TYPES)**	1
8	221998	REST-WING, RH, WLDMT **(12-16 SHANKS - ALL CLAMP TYPES)**	1
8	230870	REST-WING, RH, WLDMT **(11N SHANKS - ALL CLAMP TYPES) (BEFORE 08/03/2026)**	1
9	221963	REST-WING, 180, WLDMT **(9-11 SHANKS - ALL CLAMP TYPES)**	2
10	4001311	3/4 x 4 HITCH PIN	2
11	253890	MOUNT-JACK STAND,LH,WELDMENT **(11N SHANKS - ALL CLAMP TYPES) (AFTER 08/03/2026)**	1
12	253894	MOUNT-JACK STAND,RH,WELDMENT **(11N SHANKS - ALL CLAMP TYPES) (AFTER 08/03/2026)**	1
13	230870	REST-WING, LH, WELDMENT **(11N SHANKS - ALL CLAMP TYPES) (AFTER 08/03/2026)**	1
14	230869	REST-WING, RH, WELDMENT **(11N SHANKS - ALL CLAMP TYPES) (AFTER 08/03/2026)**	1

Jack Stand and Wing Rest (11/01/21 TO 06/07/23)

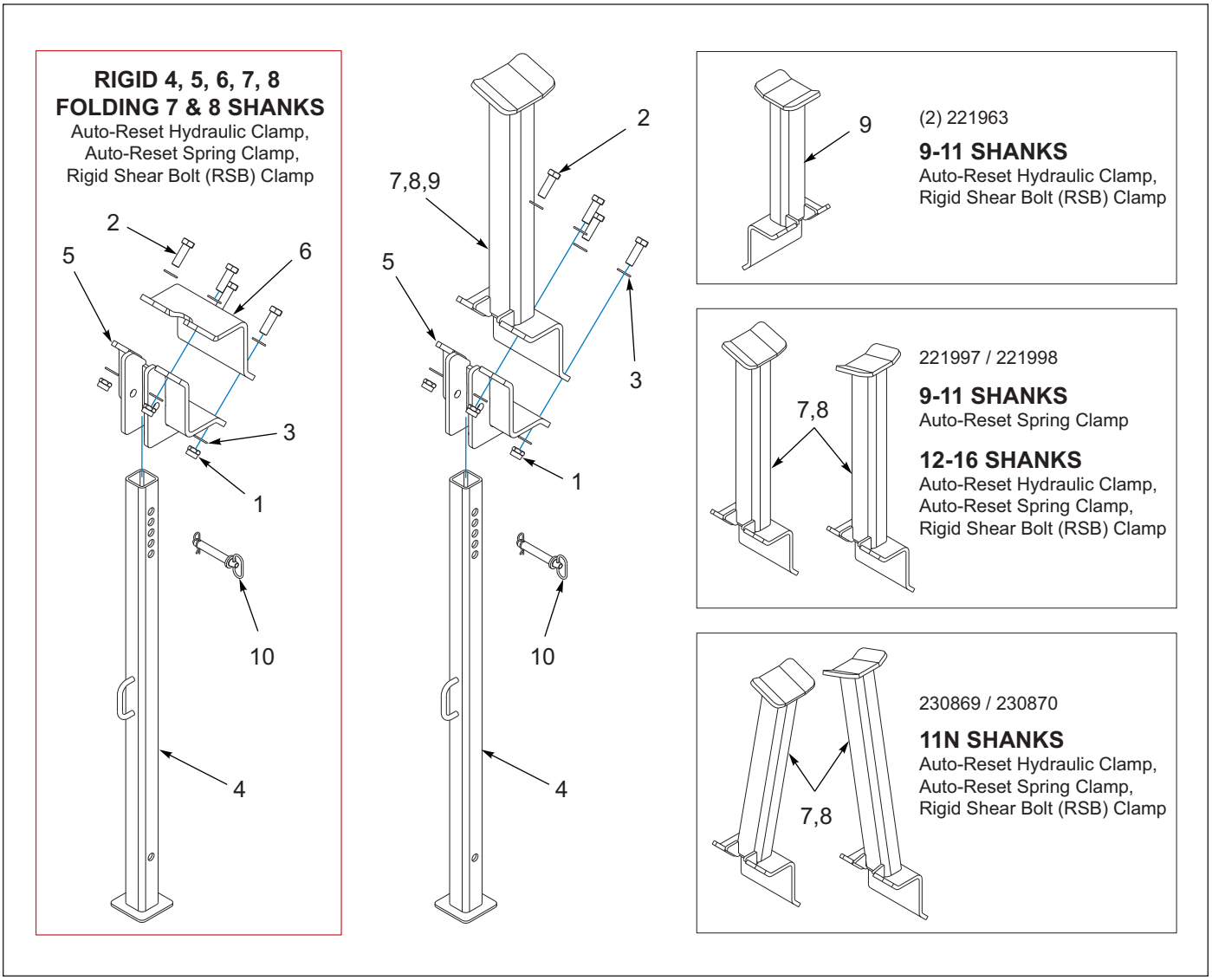

Figure 1-19: 2512 Jack Stand and Wing Rest (11/01/21 TO 06/07/23)

Jack Stand and Wing Rest (11/01/21 TO 06/07/23)

ITEM	PART NUMBER	DESCRIPTION	QTY.
1	1-512-010005-15	NUT,HEX,SLFLKG GRB 3/4-10	8
2	1-654-010061-06	SCREW,HXCP,3/4-10UNCX2-1/4GR5	8
3	1-861-010032-20	WASHER, FLAT,3/4 N ZP/CD	16
4	221990	JACK STAND WLDMT	2
5	221993	MOUNT-JACK STAND, WLDMT	2
6	222015	CAP-BRACKET,JACK MOUNT **(RIGID FRAME - ALL CLAMP TYPES) (FOLDING 7 & 8 SHANKS - ALL CLAMP TYPES)**	2
7	221997	REST-WING, LH, WLDMT **(9-11 SHANKS - SPRING) (12-16 SHANKS - ALL)**	1
7	230869	REST-WING, LH, WLDMT **(11N SHANKS - ALL CLAMP TYPES)**	1
8	221998	REST-WING, RH, WLDMT **(9-11 SHANKS - SPRING) (12-16 SHANKS - ALL)**	1
8	230870	REST-WING, RH, WLDMT **(11N SHANKS - ALL CLAMP TYPES)**	1
9	221963	REST-WING, 180, WLDMT **(9-11 SHANKS - HYD & RSB)**	2
10	4001311	3/4 x 4 HITCH PIN	2

Jack Stand and Wing Rest (BEFORE 11/01/2021)

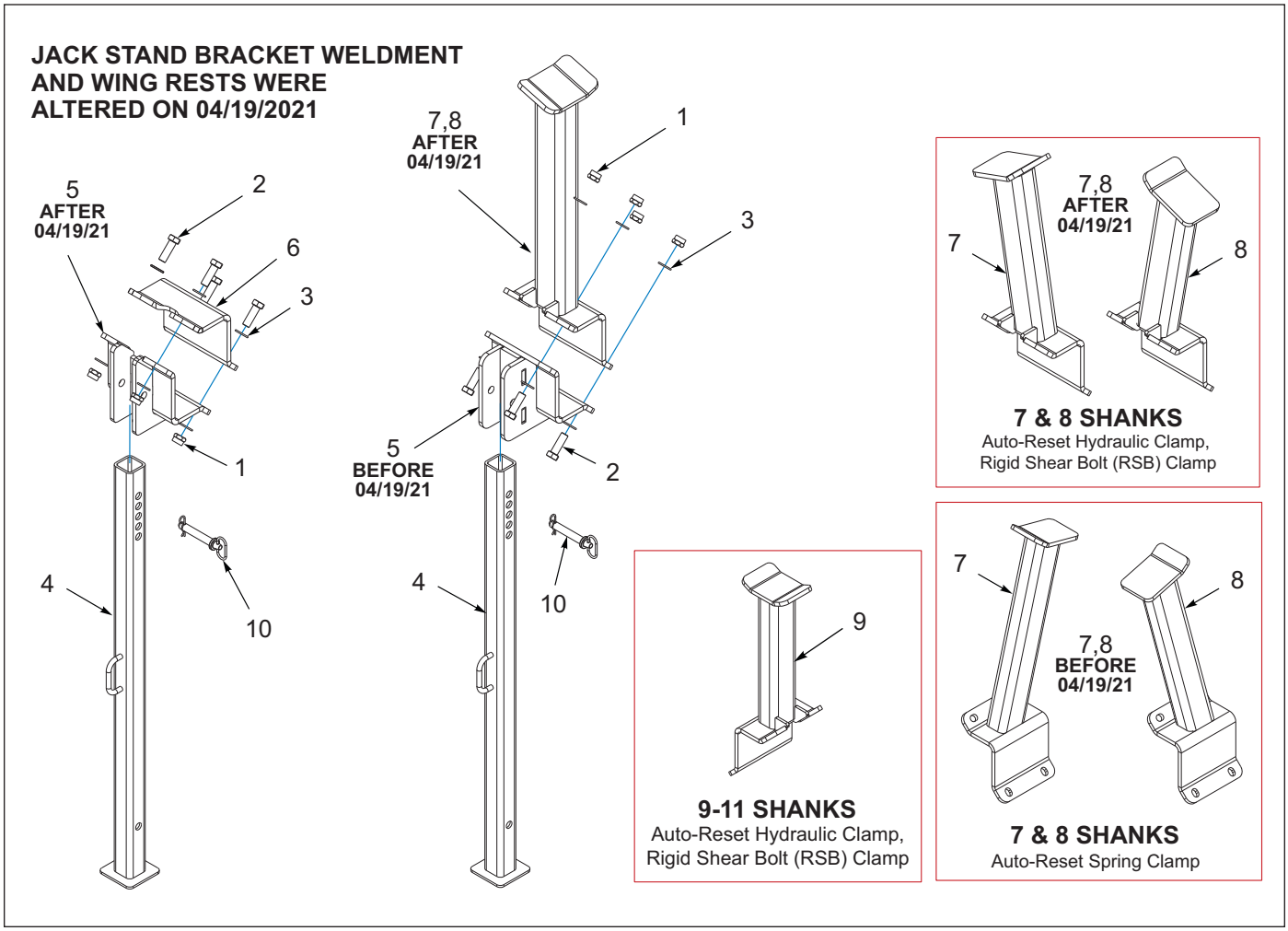

Figure 1-20: 2512 Jack Stand and Wing Rest (BEFORE 11/01/2021)

Jack Stand and Wing Rest (BEFORE 11/01/2021)

ITEM	PART NUMBER	DESCRIPTION	QTY.
1	1-512-010005-15	NUT,HEX,SLFLKG GRB 3/4-10	8
2	1-654-010061-06	SCREW,HXCP,3/4-10UNCX2-1/4GR5	8
3	1-861-010032-20	WASHER, FLAT,3/4 N ZP/CD	16
4	221990	JACK STAND WLDMT	2
5	221993	BRACKET, JACK STAND, WLDMT	2
6	222015	CAP-BRACKET,JACK MOUNT **(RIGID FRAME ONLY)**	2
7	230873	REST-WING, LH, WLDMT **(FOLDING 7 & 8 SHANKS - HYD & RSB) (SHOWN)**	1
7	230875	REST-WING, LH, WLDMT **(FOLDING 7 & 8 SHANKS - SPRING) (SHOWN)**	1
7	221997	REST-WING, LH, WLDMT **(FOLDING 9-16 SHANKS - SPRING)**	1
7	230869	REST-WING, LH, WLDMT **(FOLDING 11N - ALL CLAMP TYPES)**	2
8	230874	REST-WING, RH, WLDMT **(FOLDING 7 & 8 SHANKS - HYD & RSB)**	1
8	230876	REST-WING, RH, WLDMT **(FOLDING 7 & 8 SHANKS - SPRING)**	1
8	221998	REST-WING, RH, WLDMT **(FOLDING 9-16 SHANKS - SPRING)**	1
8	230870	REST-WING, RH, WLDMT **(FOLDING 11N - ALL CLAMP TYPES)**	1
9	221963	REST-WING, 180, WLDMT **(9-16 SHANKS - HYD & RSB) (SHOWN)**	2
10	4001311	3/4 x 4 HITCH PIN	2

Jack Stand, Rear - Optional

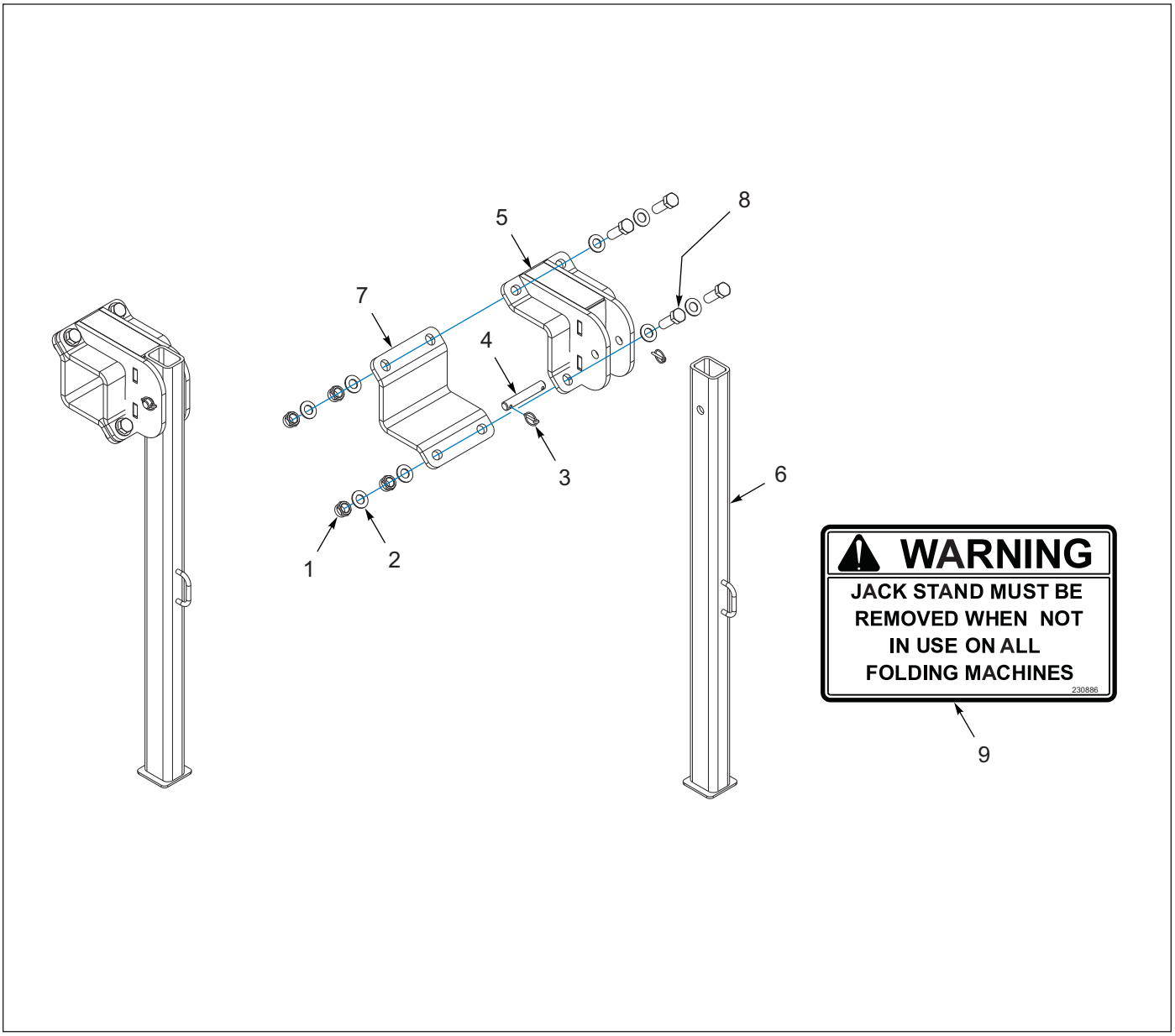

Figure 1-21: Jack Stand, Rear - Optional

Jack Stand, Rear - Optional

ITEM	PART NUMBER	DESCRIPTION	QTY.
	230884	STAND-JACK, REAR ASSY **(INCLUDES ITEMS 1-8)**	1
1	1-512-010005-19	NUT 1-8 HEX SLF-LOCKING GRB	4
2	1-861-010032-24	WASHER FL 1IN NARROW ZP	8
3	134912	PIN, LYNCH 1/4 X 1-1/4	2
4	193753	PIN, 1.00 X 6.00 H2	1
5	230880	BRACKET-JACK STAND, WLDMT	1
6	230883	STAND-JACK, WLDMT	1
7	230888	BRACKET-MOUNT, JACK STAND	1
8	3J608	SCREW,HX CP 1-8UNC X 3 GR5	4
9	230886	DECAL, JACK STAND	1

Table provided for general use.

NOTES:

Gauge Wheel Assembly - Horizontal Mount (Left and Right)

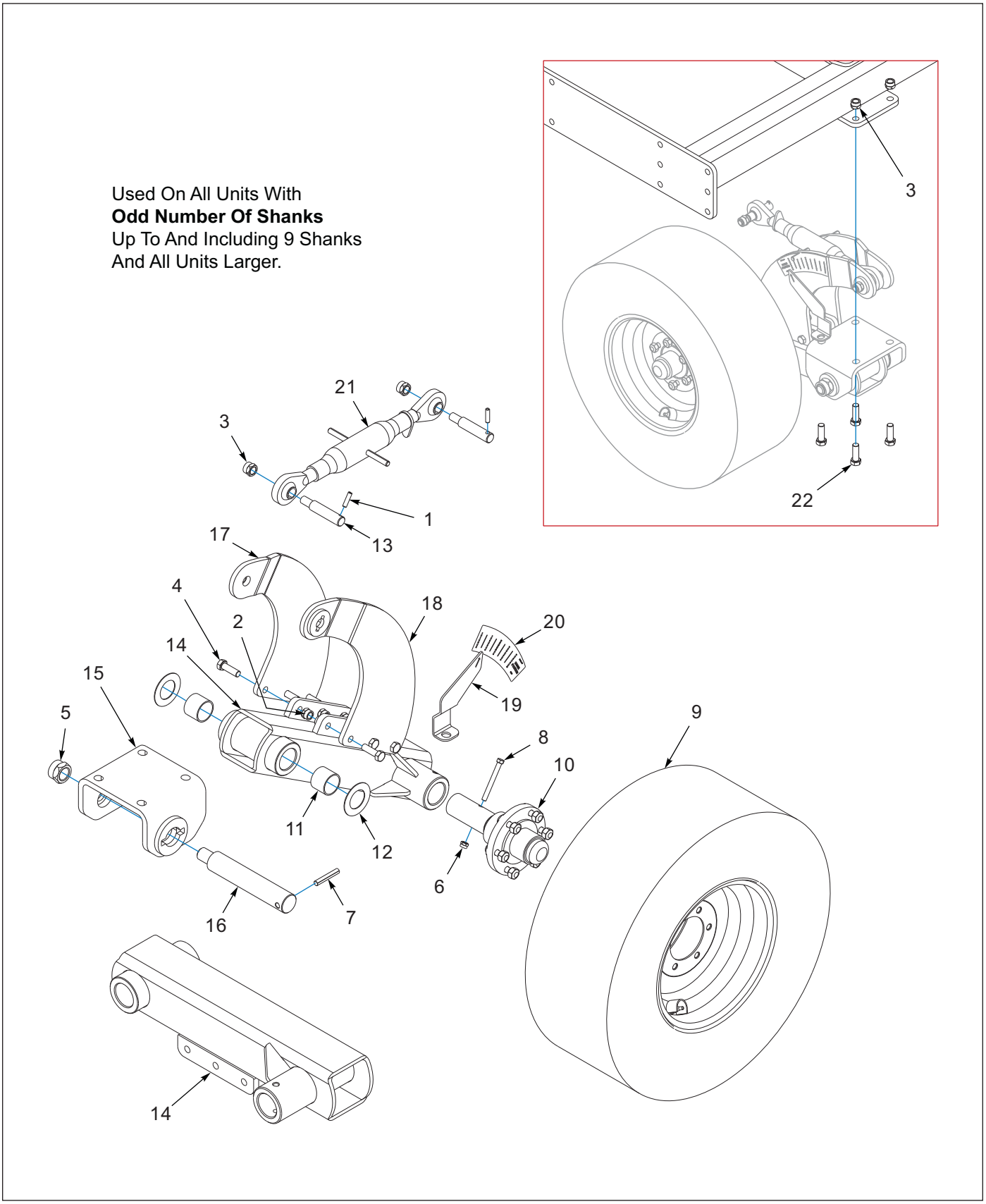

Figure 1-22: Gauge Wheel Assembly - Horizontal Mount (Left and Right)

Gauge Wheel Assembly - Horizontal Mount (Left & Right)

ITEM	PART NUMBER	DESCRIPTION	QTY.
	217335	WHEEL-GUAGE,LH 2512 ASSY **(INCLUDES ITEMS 1-21)**	1
	217336	WHEEL-GUAGE,RH 2512 ASSY **(INCLUDES ITEMS 1-21)**	1
1	0600-375-01500	PIN ROLL 3/8X1-1/2	2
2	1-512-010005-13	NUT,HEX SLFLKG GRB 5/8-11	6
3	1-512-010005-15	NUT,HEX,SLFLKG GRB 3/4-10	2
		(FOR MOUNTING HARDWARE - ADDITIONAL 4 PER WHEEL ASM)	
4	1-654-010059-05	SCREW,HEX CAP,5/8-11UNCX2 GR5	6
5	101385	NUT,HEX SLFLKG,1-1/4-7 GRB	1
6	101988	NUT,HEXSLF-LKG 7/16-14 GRB	1
7	140191	PIN, GROOVED ALLOY 1/2X3	1
8	141809	SCREW HX CP7/16-14UNC X 4 GR5	1
9	167297	TIRE & WHEEL ASSY, 280/70R15 **(OFF-WHITE)**	1
10	164352	HUB ASSY, 6BOLT 2-1/4 SPINDLE **(SEE PAGE 1-31)**	1
11	197140	BUSHING POLYLUBE 2-1.4X2X1-3/4	2
12	202844	WASHER, 2 X 3-1/2 X 14 GA, SS	2
13	203486	PIN SHOULDER 1 X 3-3/8	2
14	214275	ARM-GAUGE MOUNT, LH, WLDMT **(LEFT)**	1
14	214265	ARM-GAUGE MOUNT, RH, WLDMT **(RIGHT)**	1
15	214268	MOUNT-GAUGE WHEEL	1
16	214276	PIN-SHOULDER, 2 X 9.375	1
17	214283	PLATE-CONTROL, GAUGE, RH WLDMT	1
18	214284	PLATE-CONTROL, GAUGE, LH WLDMT	1
19	227275	GAUGE-DEPTH, LH **(LEFT)**	1
19	227276	GAUGE-DEPTH, RH **(RIGHT)**	1
20	227277	DECAL, DEPTH GAUGE, LH **(LEFT)**	1
20	227278	DECAL, DEPTH GAUGE, RH **(RIGHT)**	1
21	7K286	TOP LINK	1
22	1-654-010061-06	SCREW, HXCP,3/4-10UNCX2-1/4GR5	REF
		(MOUNTING HARDWARE - 4 PER WHEEL ASM)	

Gauge Wheel Assembly - Vertical Mount (Left and Right)

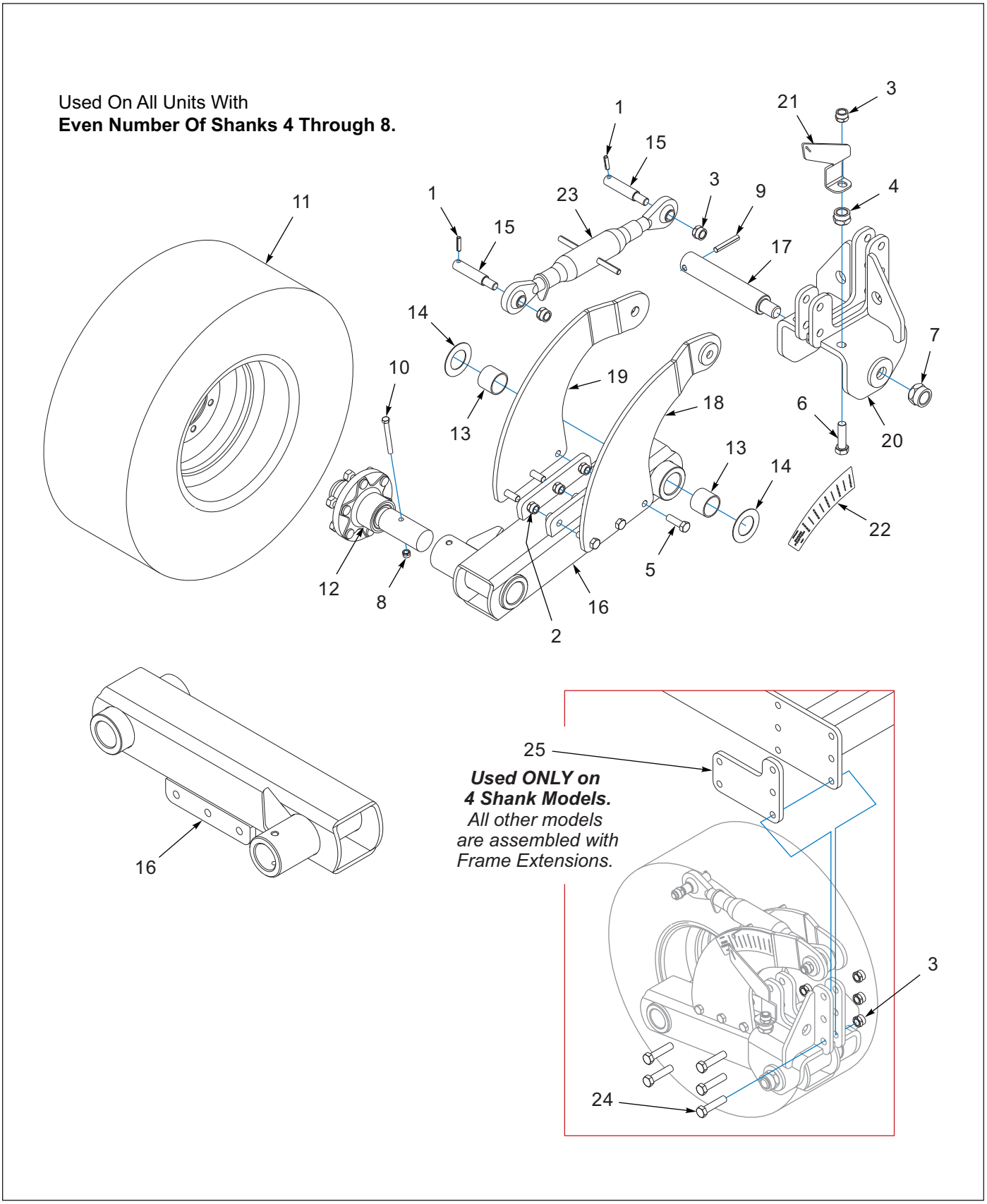

Figure 1-23: Gauge Wheel Assembly - Vertical Mount (Left and Right)

Gauge Wheel Assembly - Vertical Mount (Left and Right)

ITEM	PART NUMBER	DESCRIPTION	QTY.	
	217337	WHEEL-GAUGE, LH, 2512 ASSY **(INCLUDES ITEMS 1-23)**	1	- -
	217338	WHEEL-GAUGE, RH 2512 ASSY **(INCLUDES ITEMS 1-23)**	- -	1
1	0600-375-01500	PIN ROLL 3/8X1-1/2	2	2
2	1-512-010005-13	NUT,HEX SLFLKG GRB 5/8-11	6	6
3	1-512-010005-15	NUT,HEX,SLFLKG GRB 3/4-10 **(FOR MOUNTING HARDWARE - ADDITIONAL 5 PER WHEEL ASM)**	3	3
4	1-512-010005-19	NUT 1-8 HEX SLF-LOCKING GRB	1	1
5	1-654-010059-05	SCREW,HEX CAP,5/8-11UNCX2 GR5	6	6
6	231922	SCREW, HEX CAP, 3/4-10x2-3/4	1	1
7	101385	NUT,HEX SLFLKG,1-1/4-7 GRB	1	1
8	101988	NUT,HEXSLF-LKG 7/16-14 GRB	1	1
9	140191	PIN, GROOVED ALLOY 1/2X3	1	1
10	141809	SCREW HX CP7/16-14UNC X 4 GR5	1	1
11	167297	TIRE & WHEEL ASSY, 280/70R15 **(OFF-WHITE)**	1	1
12	164352	HUB ASSY, 6BOLT 2-1/4 SPINDLE	1	1
13	197140	BUSHING POLYLUBE 2-1.4X2X1-3/4	1	1
14	202844	WASHER, 2 X 3-1/2 X 14 GA, SS	1	1
15	203486	PIN SHOULDER 1 X 3-3/8	1	1
16	214275	ARM-GAUGE MOUNT, LH, WLDMT **(LEFT)**	1	- -
16	214265	ARM-GAUGE MOUNT, RH, WLDMT **(RIGHT)**	- -	1
17	214276	PIN-SHOULDER, 2 X 9.375	1	1
18	214283	PLATE-CONTROL, GAUGE, RH WLDMT	1	1
19	214284	PLATE-CONTROL, GAUGE, LH WLDMT	1	1
20	214347	MOUNT-GAUGE WHEEL, WLDMT	1	1
21	227276	GAUGE-DEPTH, RH **(LEFT)**	1	- -
21	227275	GAUGE-DEPTH, LH **(RIGHT)**	- -	1
22	227278	DECAL, DEPTH GAUGE, RH **(LEFT)**	1	- -
22	227277	DECAL, DEPTH GAUGE, LH **(RIGHT)**	- -	1
23	7K286	TOP LINK	1	1
24	214337	SCREW, HEX CAP, 3/4-10 X 3-1/4 **(MOUNTING HARDWARE - 5 PER WHEEL ASM)**	5	5
25	214351	WHEEL-GAUGE, LH, 2512 ASSY **(MOUNTING HARDWARE - 4 SHANK UNIT ONLY)**	REF	REF

Hub Assembly

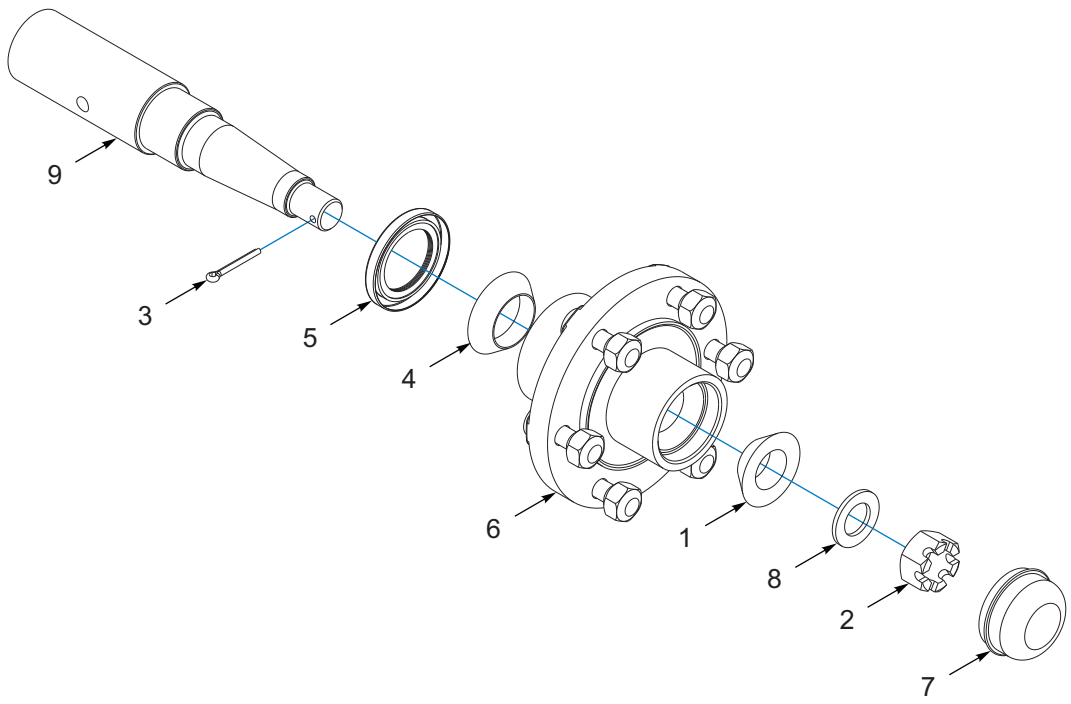

Figure 1-24: Hub Assembly

Hub Assembly

ITEM	PART NUMBER	DESCRIPTION	QTY.
	164352	HUB ASSY, 6 BOLT 2-1/4	1
1	1-076-010007	CONE INNER	1
2	1-516-010001-20	NUT, HX SLOT	1
3	1-557-010362-51	PIN, COTTER	1
4	102498	BEARING CONE,OUTER, 1.625	1
5	140554	SEAL GREASE	1
6	140645	HUB W/CUPS, SIX BOLT	1
7	141236	DUST CAP, WHEEL HUB	1
8	141238	WASHER, SPINDLE	1
9	164349	SPINDLE 2-1/4	1

Table provided for general use.

NOTES:

Rear Tow Bar Hitch - Optional

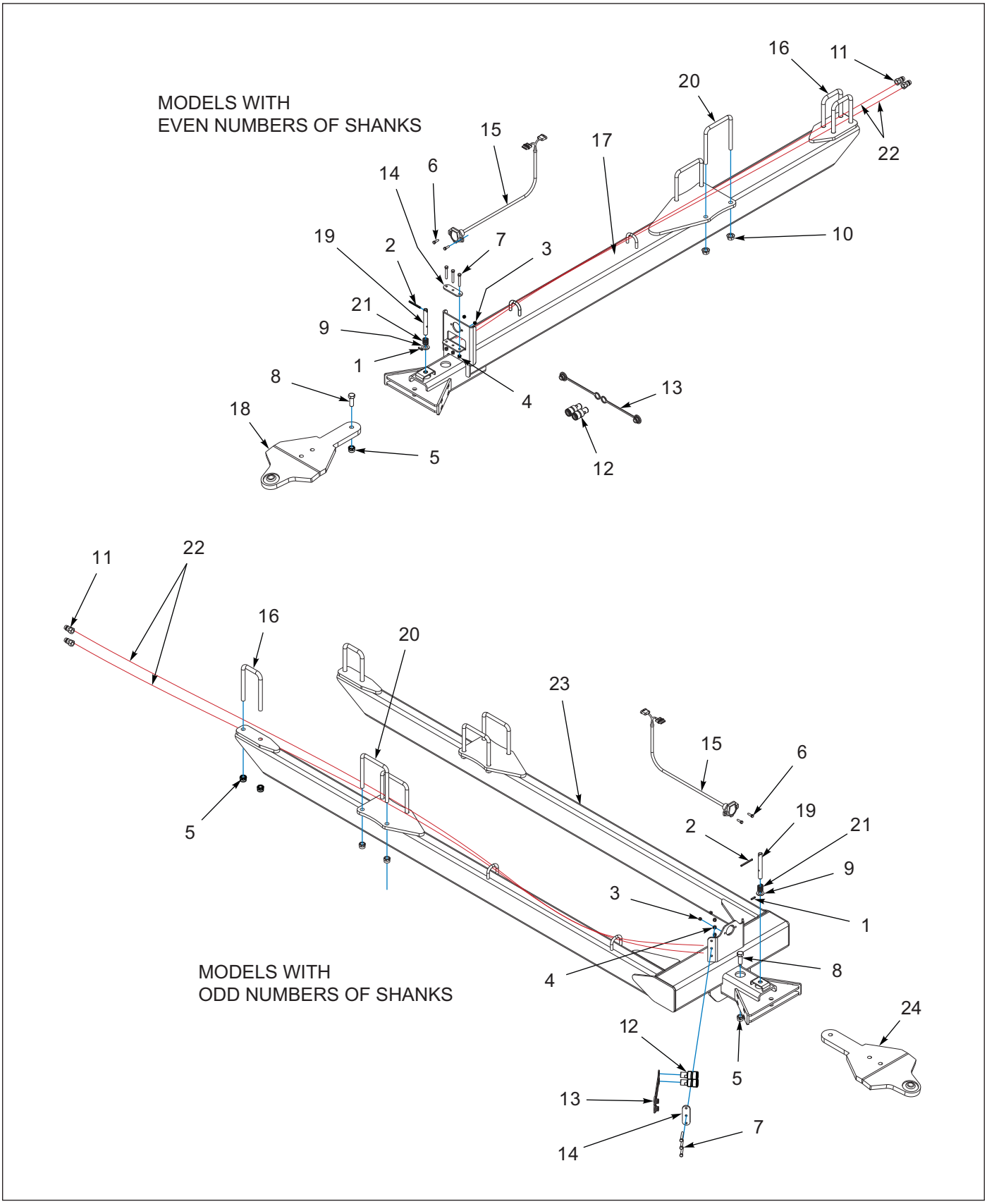

Figure 1-25: Rear Tow Bar Hitch - Optional

Rear Tow Bar Hitch - Optional

ITEM	PART NUMBER	DESCRIPTION	QTY.	
	235965	HITCH-REAR, EVEN, 2512, ASM	1	- -
	235967	HITCH-REAR, ODD, 2512	- -	1
1	0600-250-01000	1/4X1 ROLL PIN ZP	1	1
2	0600-250-03000	1/4X3 ROLL PIN ZP	1	1
3	1-512-010005-03	NUT HEX SLFLKG GRB 5/16-18	2	2
4	1-512-010005-05	NUT, HEX, SLFLKG GRB 3/8-16	3	3
5	1-512-010005-15	NUT,HEX,SLFLKG GRB 3/4-10	1	13
6	1-654-010049-05	SCREW HX CP 5/16-18UNCX1 GR5	2	2
7	1-654-010051-11	SCREW HX CP 3/8-16X2-1/2 G5ZP	3	3
8	1-654-010061-05	SCREW,HHC,3/4-10UNCX2,GR5,ZP	1	1
9	1-861-010032-20	WASHER, FLAT,3/4 N ZP/CD	1	1
10	103841	NUT,FLG,LNK,SERRATED 3/4-10UNC	8	- -
11	141828	COUPLER,MALE 3/4-16 O-RING	2	2
12	142668	COUPLER FEMALE 3/4-16 O-RING	2	2
13	142669	PLUG, COUPLER DUST	2	2
14	240198	PLATE, COUPLER	1	1
15	143871	HARNESS, TANDEM ADAPTER	1	1
16	1P042	U-BOLT, 3/4-10X4.75X8.375	2	2
17	235961	HITCH-REAR, EVEN, WELDMENT	1	- -
18	240193	HITCH-REAR TOW BAR	1	- -
19	3-375-010371	HITCH PIN AGRI	1	1
20	7K723	U-BOLT 3/4-10X6-13/16X7-3/4	2	4
21	CO-975-74-2000	SPRING COMPRESSION	1	1
22	182270	HOSE ASSY, 3/8X273,8ORB, 8ORB	2	- -
22	224446	HOSE, 3/8X195,-8ORB-8ORB	- -	2
23	235966	HITCH-REAR,ODD, 2512, WELDMENT	- -	1
24	240193	HITCH-REAR TOW BAR	- -	1

Coulter Assemblies

Blade Coulter - Straight, Rippled & Pyramid Option (Left Hand)

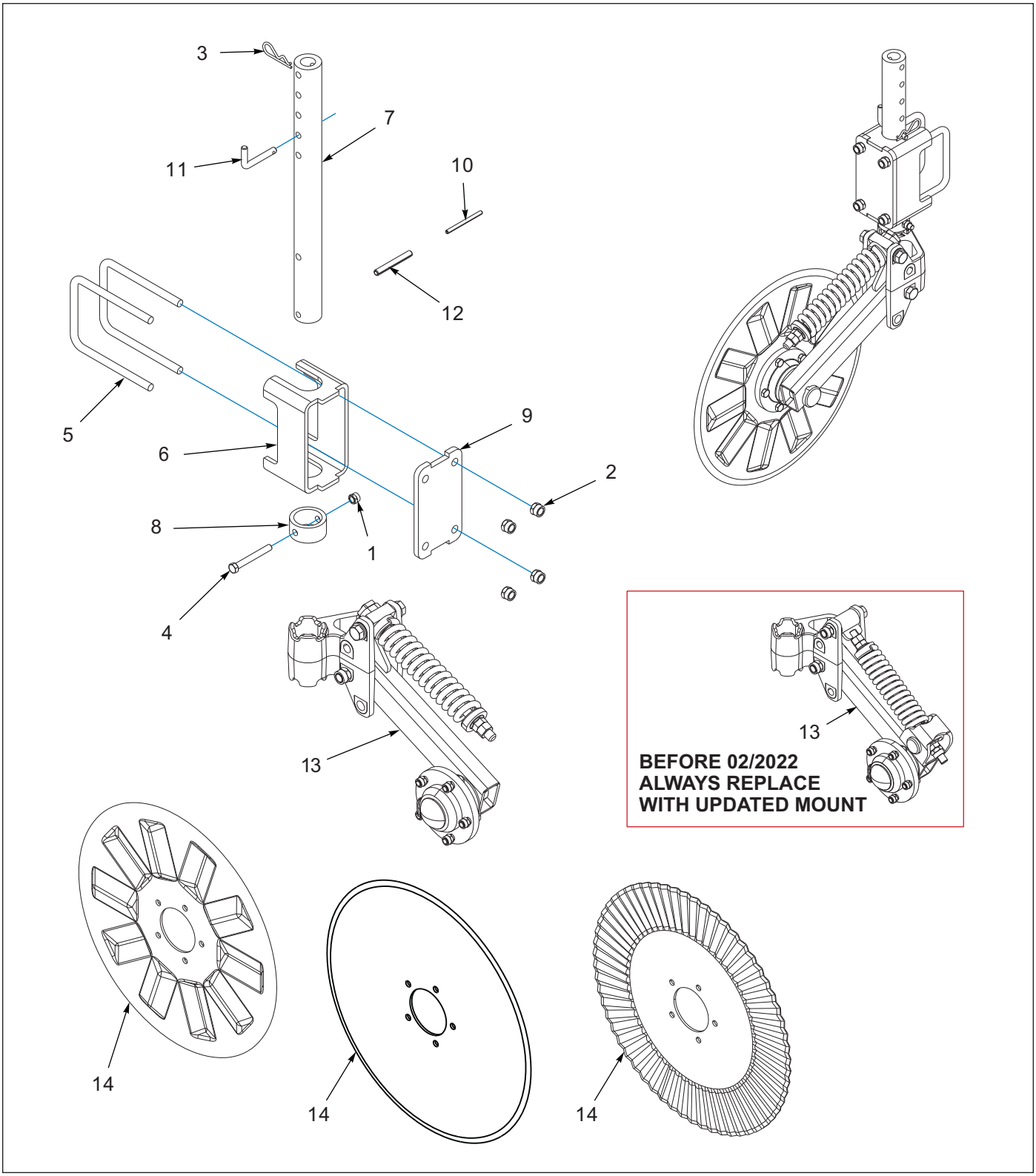

Figure 2-1: Blade Coulter - Straight, Rippled & Pyramid Option (Left Hand)

Blade Coulter - Straight, Rippled & Pyramid Options (Left Hand)

ITEM	PART NUMBER	DESCRIPTION	QTY.
	233873	COULTER-HD, STRAIGHT BLADE, LH **(AFTER 02/2022)**	1
	233875	COULTER-HD, RIPPLED BLADE, LH **(AFTER 02/2022)**	1
	233877	COULTER-HD, PYRAMID BLADE, LH **(AFTER 02/2022)**	1
	181844	22 COULTER HD SMOOTH BLADE LH **(BEFORE 02/2022)**	1
	181843	22 COULTER HD RIPPLED BLADE LH **(BEFORE 02/2022)**	1
	181845	22 COULTER HD PYRAMID BLADE LH **(BEFORE 02/2022)**	1
1	1-512-010005-09	NUT,HEX,SLFLKG, 1/2-13 GRB	1
2	1-512-010005-13	NUT,HEX SLFLKG GRB 5/8-11	4
3	1-557-010013	PIN, HAIR 3/16 DIA	1
4	1-654-010055-13	SCREW,HEX CAP,1/2-13UNCX4 GR5	1
5	149192	U-BOLT,6-11/16 CENTERS X 8-1/2	2
6	179082	COULTER CLAMP TUBE	1
7	179545	COULTER ADJUST TUBE	1
8	179546	COULTER STOP	1
9	179547	CLAMP PLATE	1
10	5D954	ROLL PIN 5/16 X 4	1
11	8-557-010095	PIN RIGID GA WHEEL 800	1
12	8K756	ROLL PIN 1/2 x 4	1
13	233841	MOUNT-COULTER, LH ASSY **(AFTER 02/2022) (SEE PAGE 2-5)**	1
13	182241	COULTER ASSY, HD **(BEFORE 02/2022) (SEE PAGE 2-7)**	1
14	179966	COULTER BLADE 22 PYRAMID	1
14	176846	COULTER 22" SMOOTH	1
14	9K289	22" COULTER	1

Blade Coulter - Straight, Rippled & Pyramid Option (Right Hand)

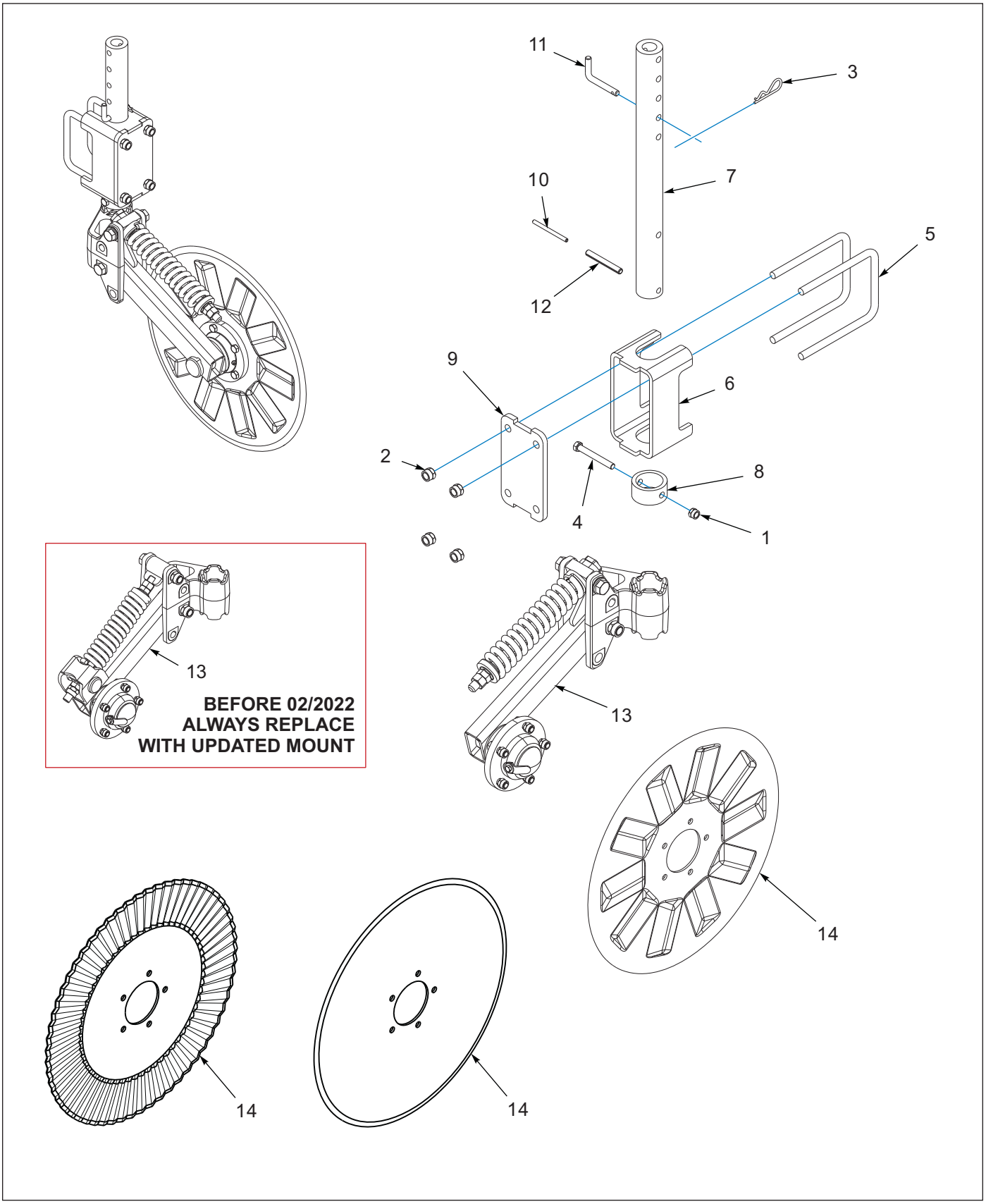

Figure 2-2: Blade Coulter - Straight, Rippled & Pyramid Option (Right Hand)

Blade Coulter - Straight, Rippled & Pyramid Option (Right Hand)

ITEM	PART NUMBER	DESCRIPTION	QTY.
	233874	COULTER-HD, STRAIGHT BLADE, RH **(AFTER 02/2022)**	1
	233876	COULTER-HD, RIPPLED BLADE, RH **(AFTER 02/2022)**	1
	233878	COULTER-HD, PYRAMID BLADE, RH **(AFTER 02/2022)**	1
	176849	22 COULTER HD SMOOTH BLADE RH **(BEFORE 02/2022)**	1
	176848	22 COULTER HD RIPPLED BLADE RH **(BEFORE 02/2022)**	1
	181085	22 COULTER HD PYRAMID BLADE RH **(BEFORE 02/2022)**	1
1	1-512-010005-09	NUT,HEX,SLFLKG, 1/2-13 GRB	1
2	1-512-010005-13	NUT,HEX SLFLKG GRB 5/8-11	4
3	1-557-010013	PIN, HAIR 3/16 DIA	1
4	1-654-010055-13	SCREW,HEX CAP,1/2-13UNCX4 GR5	1
5	149192	U-BOLT,6-11/16 CENTERS X 8-1/2	2
6	179082	COULTER CLAMP TUBE	1
7	179545	COULTER ADJUST TUBE	1
8	179546	COULTER STOP	1
9	179547	CLAMP PLATE	1
10	5D954	ROLL PIN 5/16 X 4	1
11	8-557-010095	PIN RIGID GA WHEEL 800	1
12	8K756	ROLL PIN 1/2 x 4	1
13	233842	MOUNT-COULTER, RH, ASM **(AFTER 02/2022) (SEE PAGE 2-5)**	1
13	182242	COULTER ASSY, HD **(BEFORE 02/2022) (SEE PAGE 2-7)**	1
14	179966	COULTER BLADE 22 PYRAMID	1
14	176846	COULTER 22" SMOOTH	1
14	9K289	22" COULTER	1

Heavy Duty Coulter (AFTER 02/2022)

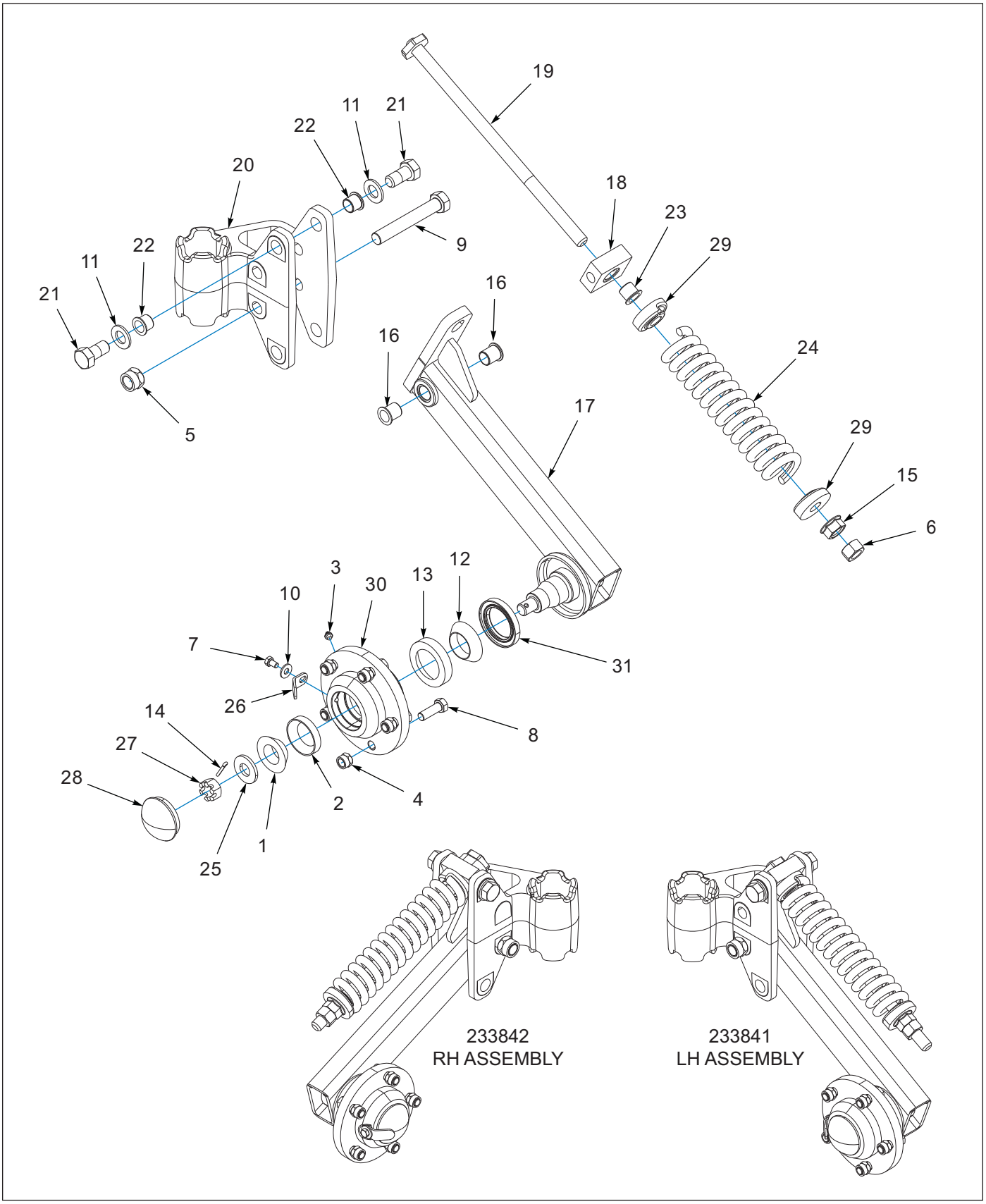

Figure 2-3: Heavy Duty Coulter (AFTER 02/2022)

Heavy Duty Coulter (AFTER 02/2022)

ITEM	PART NUMBER	DESCRIPTION	QTY.
	233841	MOUNT-COULTER, LH, ASSY	1
	233842	MOUNT-COULTER, RH, ASM	1
1	1-076-010007	CONE INNER	1
2	1-076-010010	CUP INNER	1
3	1-298-010001-1	ZERK FITTING 1/4 SAE	1
4	1-512-010005-09	NUT,HEX,SLFLKG, 1/2-13 GRB	5
5	1-512-010005-15	NUT,HEX,SLFLKG GRB 3/4-10	1
6	1-512-010007-12	NUT, HEX 3/4-10 GR2 ZP	1
7	1-654-010049-01	SCREW,HEX CAP,5/16-18UNCX1/2	1
8	1-654-010055-03	SCREW,HEX CAP,1/2-13UNCX1-1/2	5
9	1-654-010061-15	SCREW,HX CP 3/4-10UNCX5 GR5	1
10	1-861-010032-09	WASHER, FLAT 5/16 W ZP/CD	1
11	1-861-010032-20	WASHER, FLAT,3/4 N ZP/CD	2
12	102498	BEARING CONE,OUTER, 1.625	1
13	102604	BEARING CUP, OUTER	1
14	110-0344	5/32X1 COTTER PIN	1
15	168226	NUT,HEX FLG 3/4-10, GR8, ZP	1
16	182224	BEARING- IGUS,FLNGD,7/8X3/4X1	2
17	233835	ARM-COULTER, LH, WLDMT	1
17	233836	ARM-COULTER, RH, WLDMT	1
18	233838	BLOCK-PIVOT, SPRING	1
19	233845	ROD-SPRING, WLDMT	1
20	233847	MOUNT-SWIVEL, COULTER, 2512	1
21	233849	SCREW-HEX CAP,3/4-10 UNCX1-1/2	2
22	233850	BEARING-IGUS,FLNGD,QFI-1412-12	2
23	233851	BEARING-IGUS,FLNGD,QFM-2023-21	1
24	233887	SPRING,COMP,12-3/16X2-1/2,K898	1
25	3J397	WASHER 1-3/4ODX13/16IDX3/16THK	1
26	3K613	CAP STRAP	1
27	3/4-16HSN	HEX SLOTTED NUT	1
28	6D337	HUB CAP	1
29	7J569	CAP (6D410)	2
30	9K453	HUB (USES 3K612W HUB BLANK)	1
31	9K454	GREASE SEAL	1

Heavy Duty Coulter (BEFORE 02/2022)

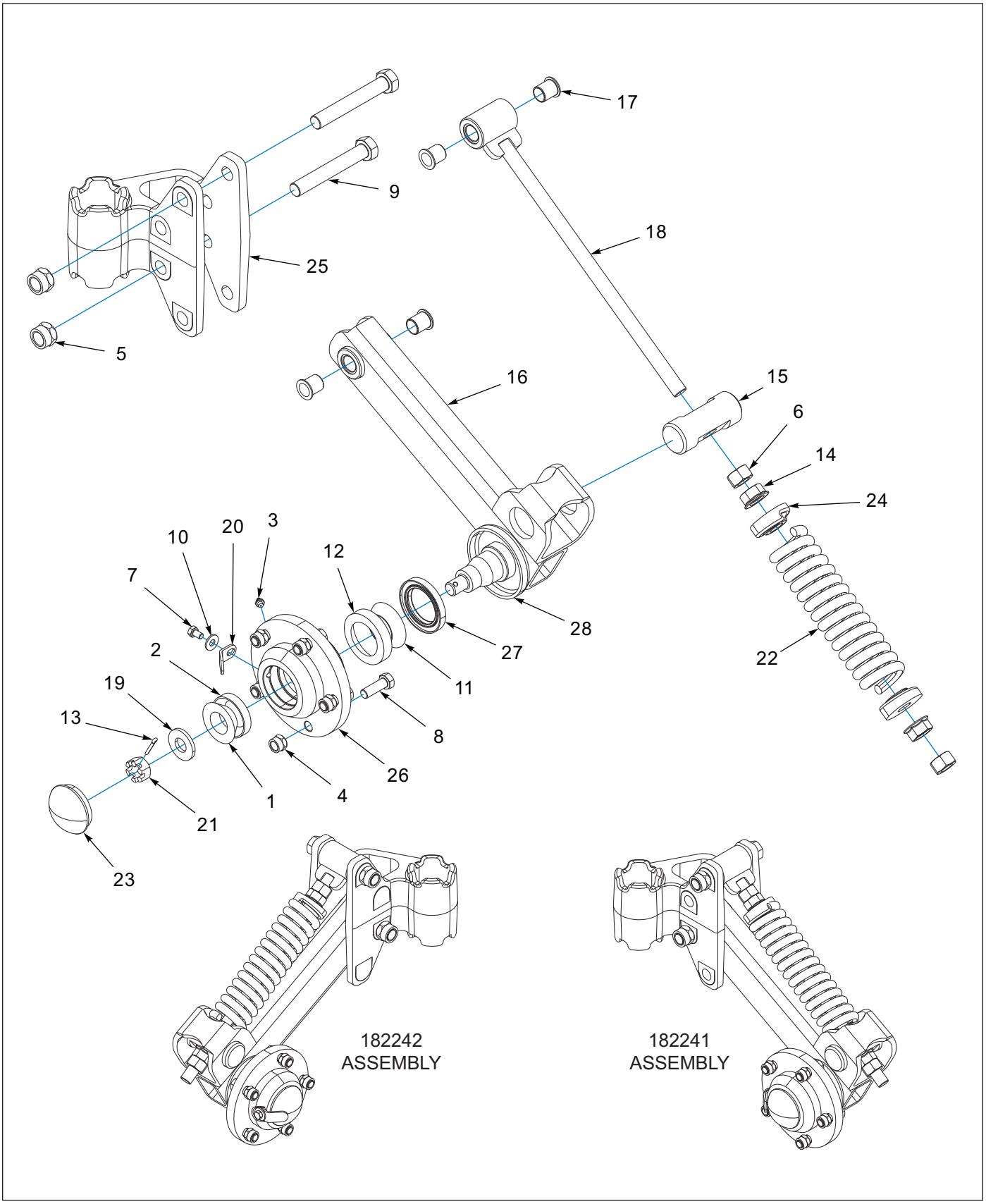

Figure 2-4: Heavy Duty Coulter (BEFORE 02/2022)

Heavy Duty Coulter (BEFORE 02/2022)

ITEM	PART NUMBER	DESCRIPTION	QTY.
	182241	COULTER ASSY, HD	1
	182242	COULTER ASSY, HD	1
1	1-076-010007	CONE INNER	1
2	1-076-010010	CUP INNER	1
3	1-298-010001-1	ZERK FITTING 1/4 SAE	1
4	1-512-010005-09	NUT,HEX,SLFLKG, 1/2-13 GRB	5
5	1-512-010005-15	NUT,HEX,SLFLKG GRB 3/4-10	2
6	1-512-010007-12	NUT, HEX 3/4-10 GR2 ZP	2
7	1-654-010049-01	SCREW,HEX CAP,5/16-18UNCX1/2	1
8	1-654-010055-03	SCREW,HEX CAP,1/2-13UNCX1-1/2	5
9	1-654-010061-15	SCREW,HX CP 3/4-10UNCX5 GR5	2
10	1-861-010032-09	WASHER, FLAT 5/16 W ZP/CD	1
11	102498	BEARING CONE,OUTER, 1.625	1
12	102604	BEARING CUP, OUTER	1
13	110-0344	5/32X1 COTTER PIN	1
14	168226	NUT,HEX FLG 3/4-10, GR8, ZP	4
15	182220	PIVOT BOLT	1
16	182222	ARM WLDMT, COULTER, RH	1
16	182225	ARM WLDMT, COULTER, LH	1
17	182224	BEARING- IGUS,FLNGD,7/8X3/4X1	4
18	182233	BOLT - EYE WELDMENT	1
19	3J397	WASHER	1
20	3K613	CAP STRAP	1
21	3/4-16HSN	HEX SLOTTED NUT	1
22	4K076	COMPRESSION SPRING - OUTER	1
23	6D337	HUB CAP	1
24	7J569	CAP (6D410)	2
25	9K295	COULTER SWIVEL	1
26	9K453	HUB	1
27	9K454	GREASE SEAL	1
28	3K608	SHIELD	1

Coulter Placement

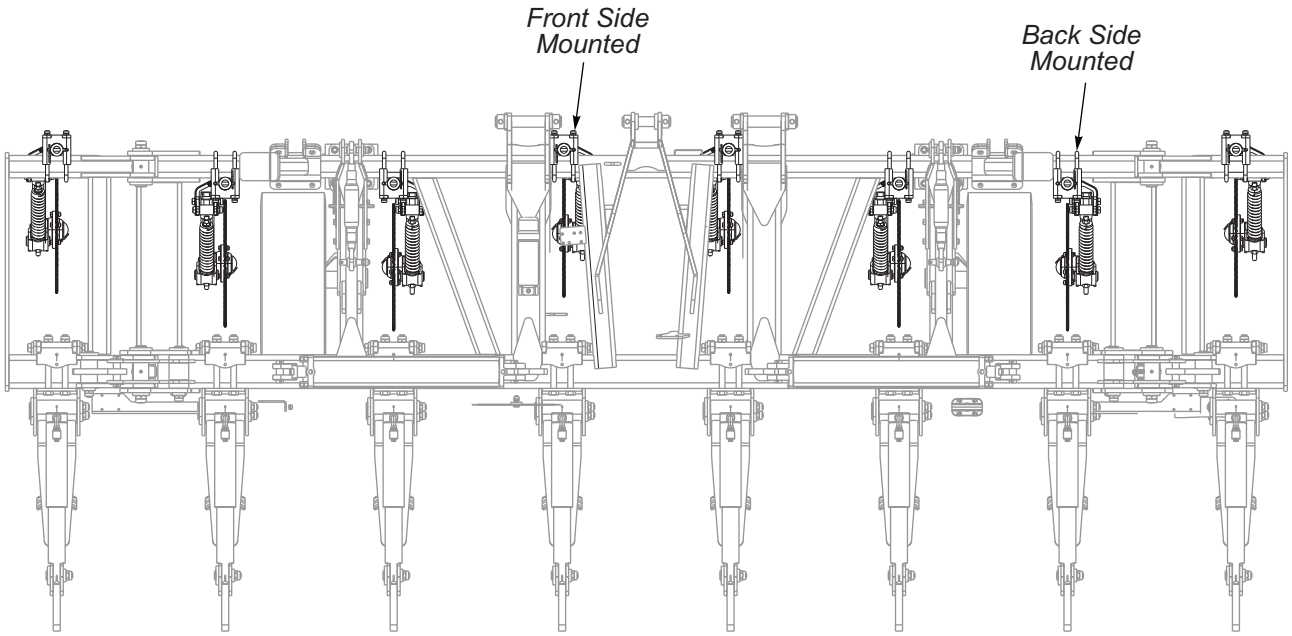

COULTER CENTER POSITIONS FOR RIGID 6, FOLDING 8 (SHOWN), 10, 12, 14, 16

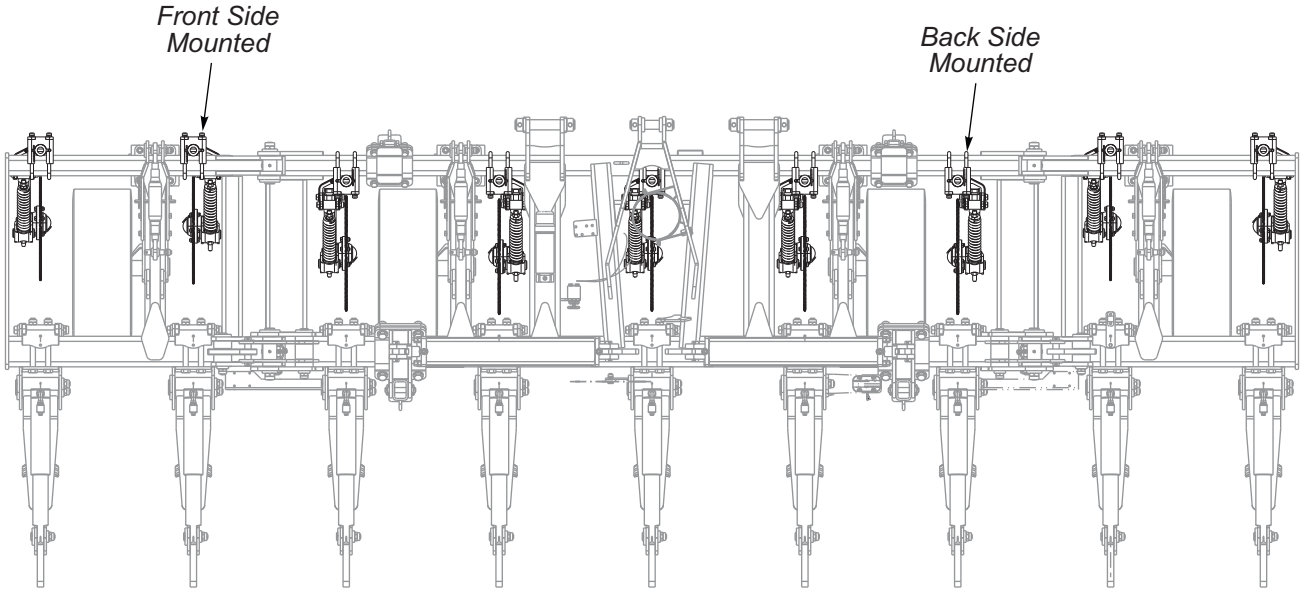

COULTER CENTER POSITIONS FOR FOLDING 9 (SHOWN)
Coulters Mounted On Backside Of Toolbar For Rigid 4 And 5

Figure 2-5: Coulter Placement

Table provided for general use.

NOTES:

Electrical

Lighting and Reflectors (Rigid 4 Shank)

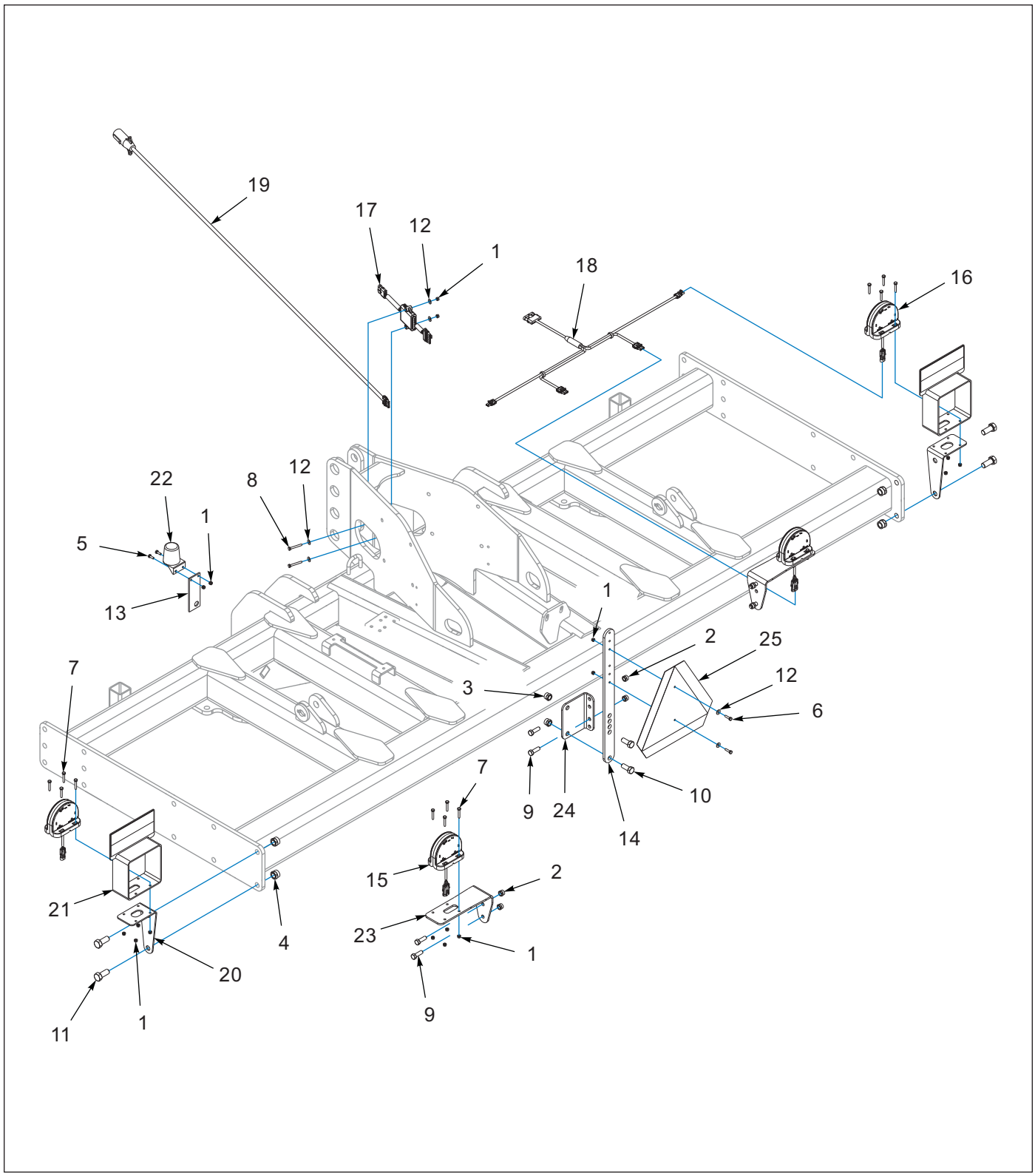

Figure 3-1: Lighting and Reflectors (Rigid 4 Shank)

Lighting and Reflectors (Rigid 4 Shank)

ITEM	PART NUMBER	DESCRIPTION	QTY.
	214335	KIT, WARNING LIGHT, 2512-4	1
1	1-512-010005-01	NUT,HEX,SLFLKG GRB 1/4-20	22
2	1-512-010005-09	NUT,HEX,SLFLKG, 1/2-13 GRB	6
3	1-512-010005-13	NUT,HEX SLFLKG GRB 5/8-11	2
4	1-512-010005-15	NUT,HEX,SLFLKG GRB 3/4-10	4
5	1-654-010047-04	SCREW,HEX CAP,1/4-20X3/4 GR5	2
6	1-654-010047-06	SCREW,HX CP 1/4-20UNCX1 GR5	2
7	1-654-010047-08	SCREW HX CP,1/4-20UNCX1-1/2G5	16
8	1-654-010047-10	SCREW,HX CP,1/4-20UNC X2 GR5	2
9	1-654-010055-03	SCREW,HEX CAP,1/2-13UNCX1-1/2	6
10	1-654-010059-03	SCREW 5/8-11UNCX1-1/2 HXCP G5	2
11	1-654-010061-04	SCREW,HX CP 3/4-10UNCX1-3/4	4
12	1-861-010032-07	WASHER,FLAT 1/4 ZP	6
13	101404	BRKT,STOR-AWAY HOLDER, 2000	1
14	164142	BRACKET, SMV MOUNTING	1
15	174435	LAMP, AG RED SINGLE LED	2
16	174436	LAMP, AG AMBER SINGLE LED	2
17	174437	MODULE, AG FLASHER CONTROL **(SEE PAGE 3-7)**	1
18	175151	HARNESS, LED WARNING LIGHTS **(SEE PAGE 3-7)**	1
19	178514	HARNESS,7 PIN/4PIN WP, 10' **(SEE PAGE 3-7)**	1
20	182290	BRACKET - LIGHT MOUNT	2
21	182310	BRACKET -LIGHT MOUNT REFLECTOR	4
22	2-368-010287	HARNESS, STOR-A-WAY	1
23	214316	BRACKET-WARNING LAMP	2
24	214317	ANGLE-MOUNT, SMV	1
25	70260977	SMV EMBLEM	1

Lighting and Reflections (Rigid 5/6/7/8 Shank)

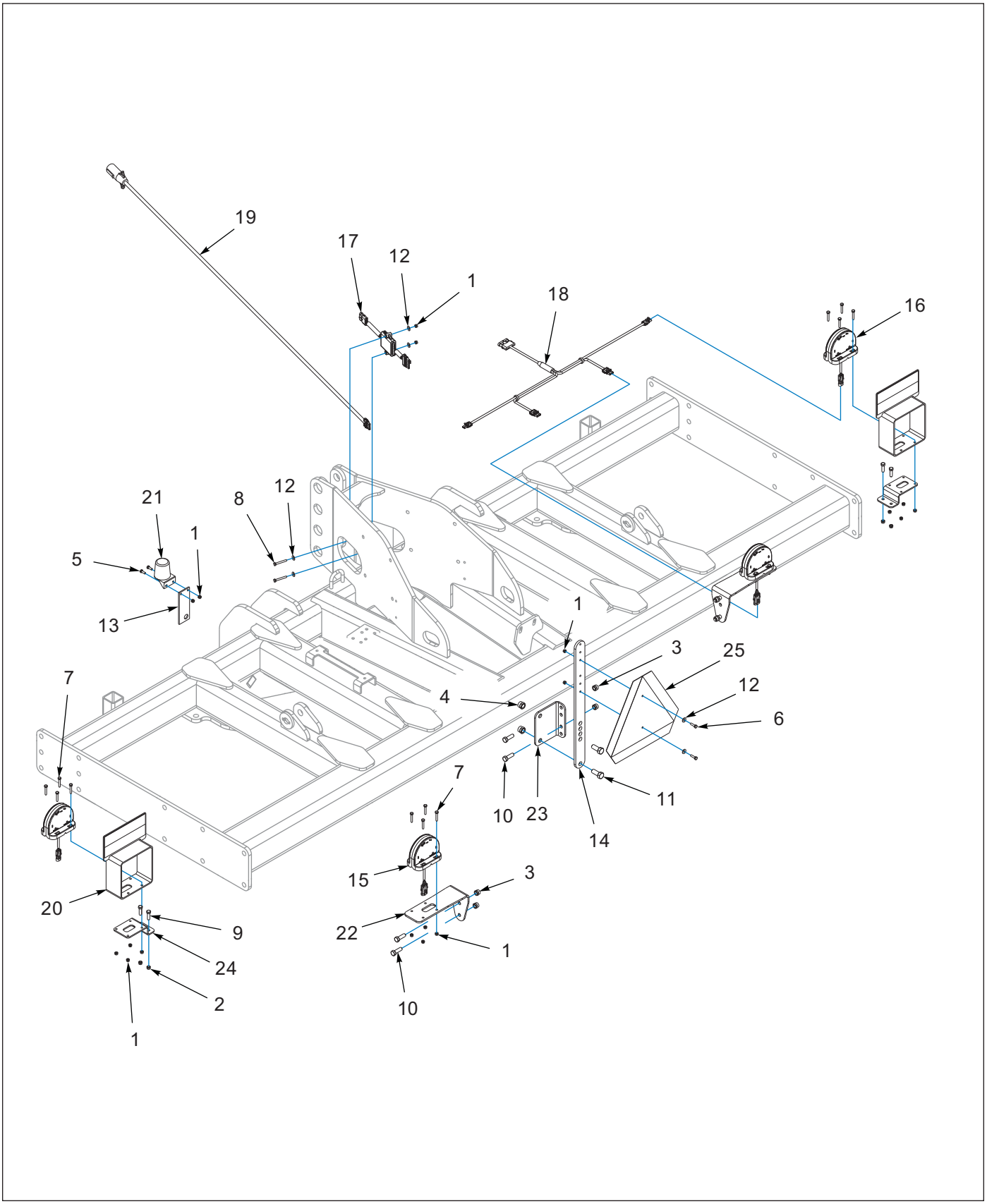

Figure 3-2: Lighting and Reflections (Rigid 5/6/7/8 Shank)

Lighting and Reflectors (Rigid 5/6/7/8 Shank)

ITEM	PART NUMBER	DESCRIPTION	QTY.
	214336	KIT,WARN LIGHT, 2512-5,6,7,&8	1
1	1-512-010005-01	NUT,HEX,SLFLKG GRB 1/4-20	22
2	1-512-010005-05	NUT,HEX,SLFLKG, GRB 3/8-16	4
3	1-512-010005-09	NUT,HEX,SLFLKG, 1/2-13 GRB	6
4	1-512-010005-13	NUT,HEX SLFLKG GRB 5/8-11	2
5	1-654-010047-04	SCREW,HEX CAP,1/4-20X3/4 GR5	2
6	1-654-010047-06	SCREW,HX CP 1/4-20UNCX1 GR5	2
7	1-654-010047-08	SCREW HX CP,1/4-20UNCX1-1/2G5	16
8	1-654-010047-10	SCREW,HX CP,1/4-20UNC X2 GR5	2
9	1-654-010051-06	SCREW,HEX CAP 3/8-16UNCX1-1/4	4
10	1-654-010055-03	SCREW,HEX CAP,1/2-13UNCX1-1/2	6
11	1-654-010059-03	SCREW 5/8-11UNCX1-1/2 HXCP G5	2
12	1-861-010032-07	WASHER,FLAT 1/4 ZP	6
13	101404	BRKT,STOR-AWAY HOLDER, 2000	1
14	164142	BRACKET, SMV MOUNTING	1
15	174435	LAMP, AG RED SINGLE LED	2
16	174436	LAMP, AG AMBER SINGLE LED	2
17	174437	MODULE, AG FLASHER CONTROL **(SEE PAGE 3-7)**	1
18	175151	HARNESS, LED WARNING LIGHTS **(SEE PAGE 3-7)**	1
19	178514	HARNESS,7 PIN/4PIN WP, 10' **(SEE PAGE 3-7)**	1
20	182310	BRACKET -LIGHT MOUNT REFLECTOR	2
21	2-368-010287	HARNESS, STOR-A-WAY	1
22	214316	BRACKET-WARNING LAMP	2
23	214317	ANGLE-MOUNT, SMV	1
24	227905	BRACKET-WARNING LIGHT MOUNT	2
25	70260977	SMV EMBLEM	1

Lighting and Reflectors (Folding)

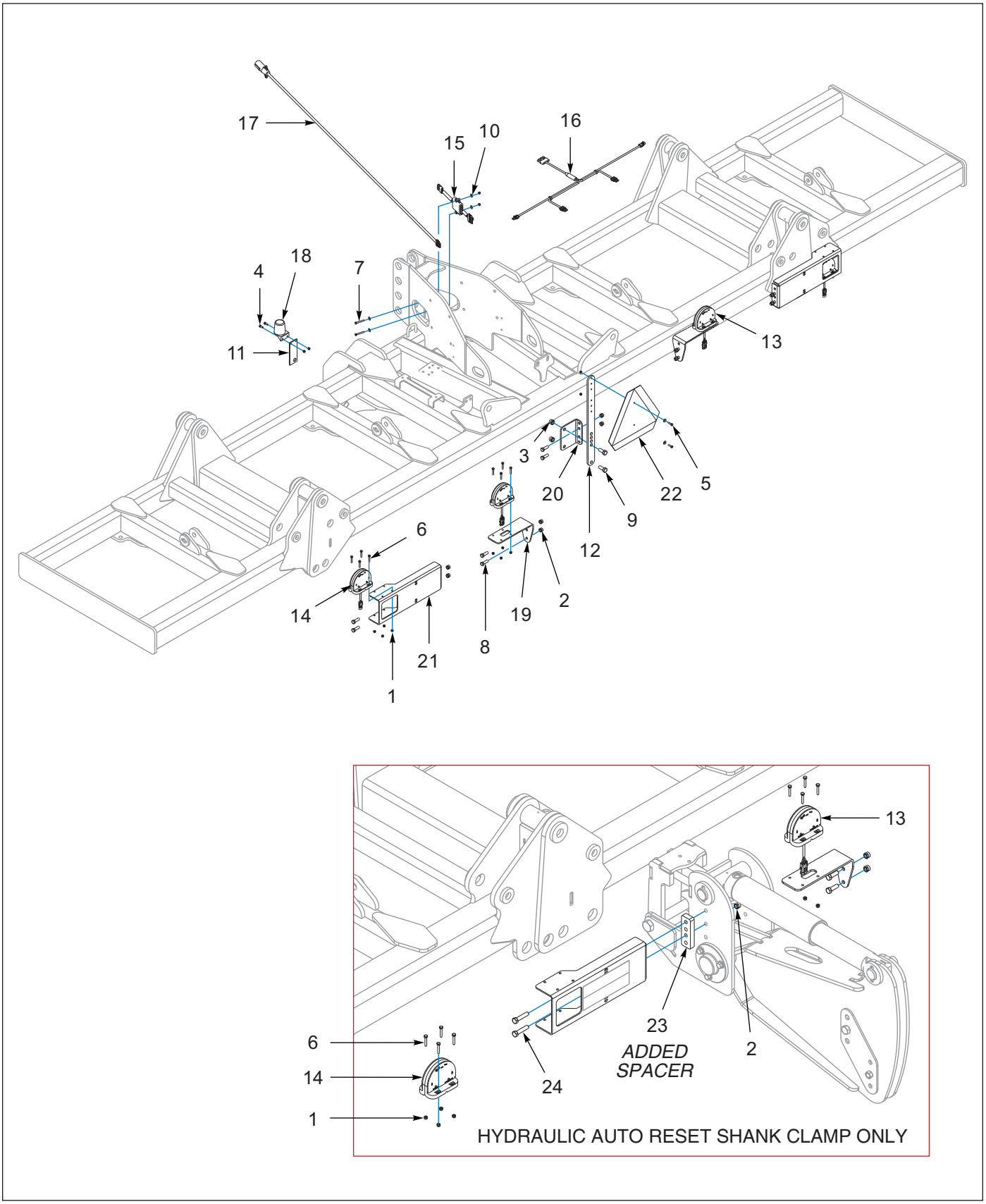

Figure 3-3: Lighting and Reflectors (Folding)

Lighting and Reflectors (Folding)

ITEM	PART NUMBER	DESCRIPTION	QTY.
	221967	KIT, WARNING LIGHT, 2512F	1
1	1-512-010005-01	NUT,HEX,SLFLKG GRB 1/4-20	22
2	1-512-010005-09	NUT,HEX,SLFLKG, 1/2-13 GRB	10
3	1-512-010005-13	NUT,HEX SLFLKG GRB 5/8-11	2
4	1-654-010047-04	SCREW,HEX CAP,1/4-20X3/4 GR5	2
5	1-654-010047-06	SCREW,HX CP 1/4-20UNCX1 GR5	2
6	1-654-010047-08	SCREW HX CP,1/4-20UNCX1-1/2G5	16
7	1-654-010047-10	SCREW,HX CP,1/4-20UNC X2 GR5	2
8	1-654-010055-03	SCREW,HEX CAP,1/2-13UNCX1-1/2	10
9	1-654-010059-03	SCREW 5/8-11UNCX1-1/2 HXCP G5	2
10	1-861-010032-07	WASHER,FLAT 1/4 ZP	6
11	101404	BRKT,STOR-AWAY HOLDER, 2000	1
12	164142	BRACKET, SMV MOUNTING	1
13	174435	LAMP, AG RED SINGLE LED	2
14	174436	LAMP, AG AMBER SINGLE LED	2
15	174437	MODULE, AG FLASHER CONTROL	1
16	175151	HARNESS, LED WARNING LIGHTS	1
17	178514	HARNESS,7 PIN/4PIN WP, 10'	1
18	2-368-010287	HARNESS, STOR-A-WAY	1
19	214316	BRACKET-WARNING LAMP	2
20	214317	ANGLE-MOUNT, SMV	1
21	221954	BRACKET, LIGHT	2
22	70260977	SMV EMBLEM	1
23	242828	PLATE-SPACER, 3/4 INCH **(USED ON HYDRAULIC AUTO RESET SHANK CLAMP ONLY)**	2
24	169690	SCREW HXCP1/2-13UNCX2-1/4 G5 **(USED ON HYDRAULIC AUTO RESET SHANK CLAMP ONLY)**	4

Wiring Diagram

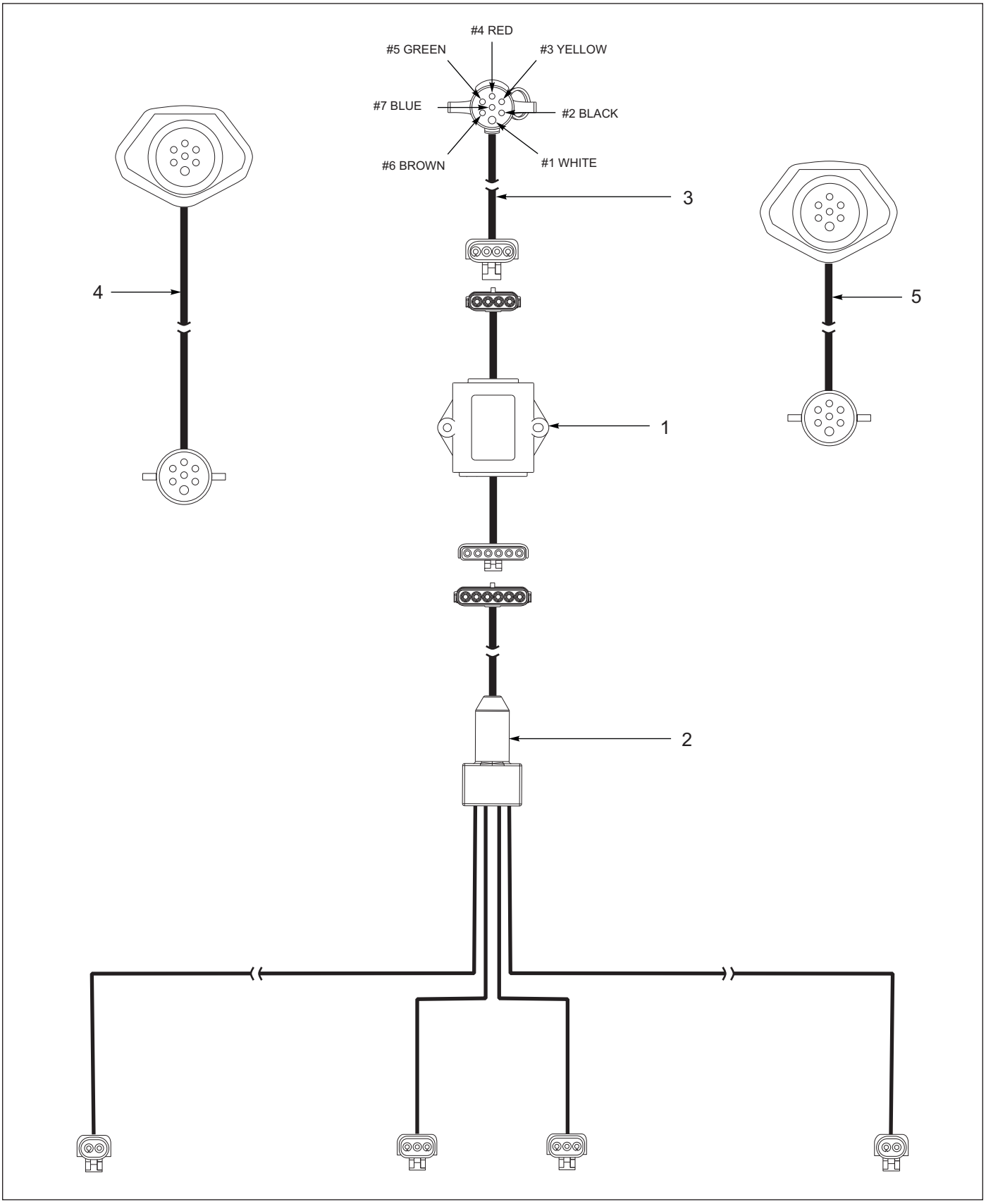

Figure 3-4: Wiring Diagram

Wiring Diagram

ITEM	PART NUMBER	DESCRIPTION	QTY.
1	174437	MODULE, AG FLASHER CONTROL	1
2	175151	HARNESS, LED WARNING LIGHTS	1
3	178514	HARNESS,7 PIN/4PIN WP, 10'	1
4	221797	HARNESS-EXTENSION, 7 WAY X24'	1
5	223319	HARNESS-EXTENSION, 7WAY X 18'	1

Hydraulics

2512 Folding Frame Hydraulic Diagram (AFTER 11/01/2021)

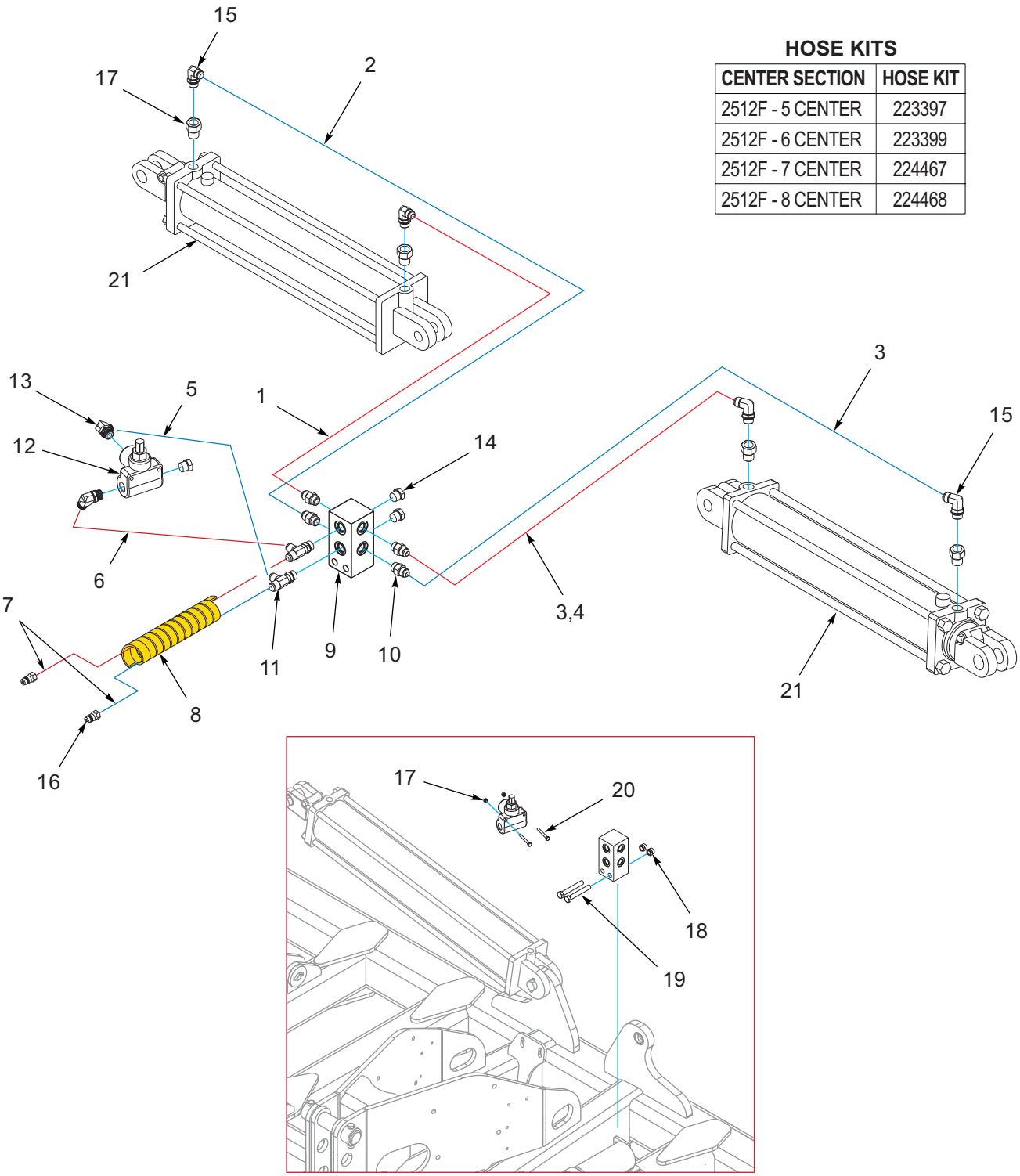

HOSE KITS

CENTER SECTION	HOSE KIT
2512F - 5 CENTER	223397
2512F - 6 CENTER	223399
2512F - 7 CENTER	224467
2512F - 8 CENTER	224468

Figure 4-1: Folding Frame Hydraulic Diagram (AFTER 11/01/2021)

2512 Folding Frame Hydraulic Diagram (AFTER 11/01/2021)

ITEM	PART NUMBER	DESCRIPTION	QTY.
	223397	KIT-HYD,HOSE,2512F-5CT,RIPPER **(5 CENTER, MODELS 7, 9, 11N) (INCLUDES ITEMS 1 - 7)**	1
	223399	KIT-HYD,HOSE,2512F-6CT,RIPPER **(6 CENTER, MODELS 8, 10, 12) (INCLUDES ITEMS 1 - 7)**	1
	224467	KIT-HYD,HOSE,2512F-7CT,RIPPER **(7 CENTER, MODELS 11, 13, 15) (INCLUDES ITEMS 1 - 7)**	1
	224468	KIT-HYD,HOSE,2512F-8CT,RIPPER **(8 CENTER, MODELS 14, 16) (INCLUDES ITEMS 1 - 7)**	1
	223398	KIT-HYD ADAPTER, RIPPER **(INCLUDES ITEMS 8 - 20)**	1
1	1-397-010369036	HOSE ASSY 3/8X36,#8 JIC SWVL **(5 CENTER) (RH)**	1
1	208812	HOSE ASSY, 3/8X52,-8FJX,-8FJX **(6 CENTER) (RH)**	1
1	122910	HOSE ASSY 3/8X70,#8 JIC SWVL **(7 CENTER) (RH)**	1
1	122909	HOSE ASSY 3/8X82,#8 JIC SWVL **(8 CENTER) (RH)**	1
2	147583	HOSE ASSY 3/8X72 #8 JIC SWIV **(5 CENTER) (RH)**	1
2	192481	HOSE ASSY 3/8 X 88 **(6 CENTER) (RH)**	1
2	139213	HOSE ASSY 3/8X105 #8JIC SWIVL **(7 CENTER) (RH)**	1
2	1422177	HOSE ASM, 3/8 X 118.25 **(8 CENTER) (RH)**	1
3	186903	HOSE ASM,3/8 X 44,8FJS ENDS **(5 CENTER) (LH)**	2
3	147584	HOSE ASSY 3/8X40 #8 JIC SWIV **(6 CENTER) (LH)**	1
3	71508984	HOSE .38 X 42 **(7 CENTER) (LH)**	1
3	181801	HOSE ASSY, 3/8X58 #8 JIC SWIV **(8 CENTER) (LH)**	1
4	116432	HOSE ASSY, 3/8X60 #8 JIC SWV **(6 CENTER) (LH)**	1
4	209436	HOSE ASSY, 3/8X76,-8FJX,-8FJX **(7 CENTER) (LH)**	1
4	116433	HOSE ASSY 3/8X90 #8 JIC SWV **(8 CENTER) (LH)**	1
5	153841	HOSE ASSY 3/8X18 #8 JIC SWIV	1
6	71508954	HOSE ASSY .38X22IN	1
7	141876	HOSE ASSY 3/8X72 #8JICX#8OR	2
8	155529	HOSE WRAP, YELLOW 1" ID X 8"	1
9	2-474-010022	MANIFOLD HYDRAULIC, 6 HOSE	1
10	202702-8-8S	ADAPTER #8 O-RING TO #8 TUBE	4
11	203005-8-8S	ADAPTER,TEE,#8 O-RING-TUBE	2
12	165287	VALVE, RELIEF, 1000PSI	1
13	2062-8-8S	ADAPTER, 90, #8 O-RING-TUBE	2
14	1-007-010025	PLUG, 3/4-16 O-RING BOSS	3
15	141826	ELBOW 90 1/16 RES	4
16	141828	COUPLER,MALE 3/4-16 O-RING	2
17	1-512-010005-01	NUT,HEX,SLFLKG GRB 1/4-20	2
18	1-512-010005-09	NUT,HEX,SLFLKG, 1/2-13 GRB	2
19	1-654-010055-11	SCREW,HX CP 1/2-13UNCX3-1/2	2
20	111190	SCREW HX CP 1/4-20UNCX2-1/4G5	2
21	233870	CYLINDER, HYD 5 X 30, 3000 PSI **(SEE PAGE 4-23)**	2

2512 Folding Frame Hydraulic Diagram (BEFORE 11/01/2021)

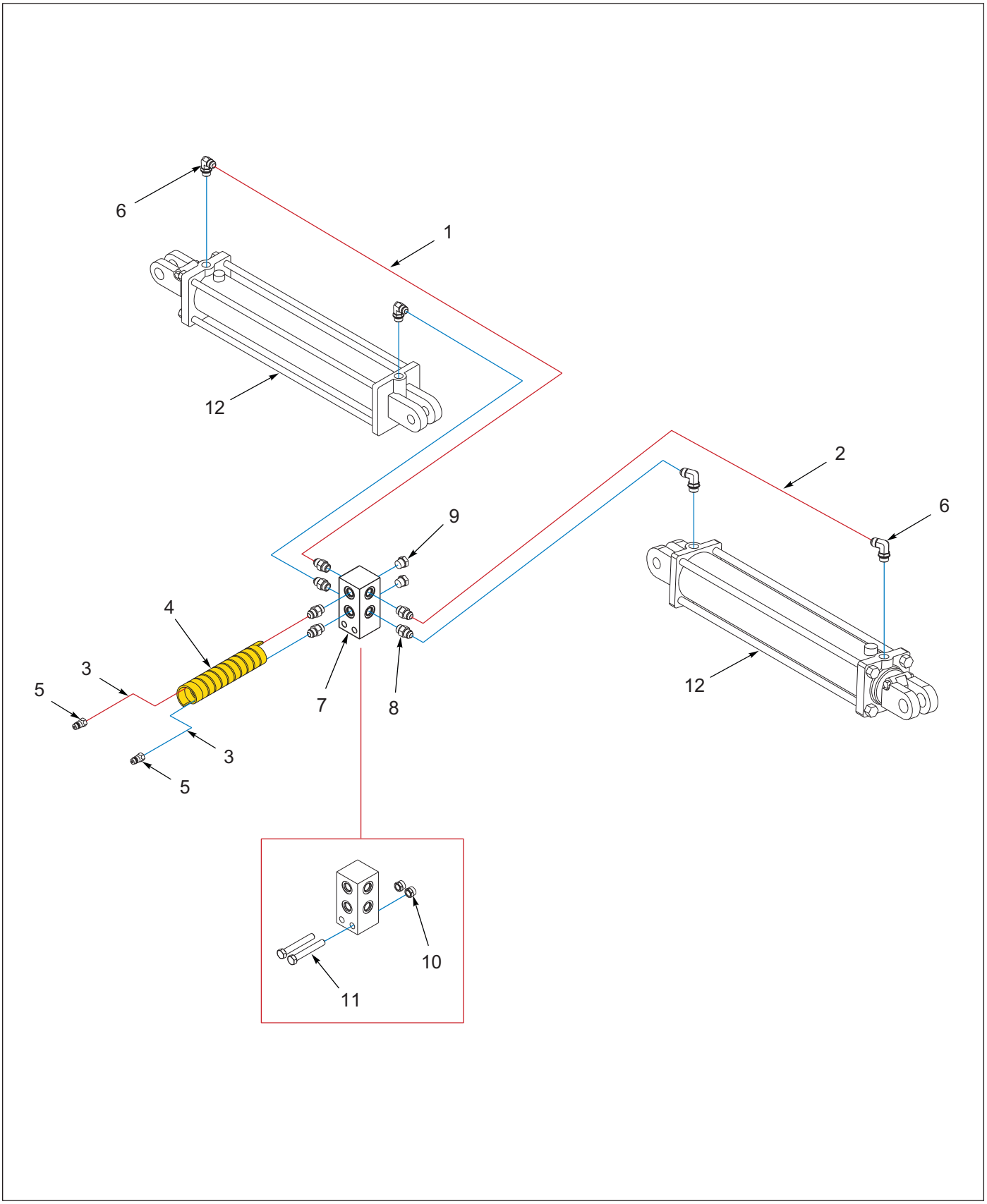

Figure 4-2: Folding Frame Hydraulic Diagram (BEFORE 11/01/2021)

2512 Folding Frame Hydraulic Diagram (BEFORE 11/01/2021)

ITEM	PART NUMBER	DESCRIPTION	QTY.
	223397	KIT-HYD,HOSE,2512F-5CT,RIPPER **(5 CENTER, MODELS 7, 9, 11N) (INCLUDES ITEMS 1 - 4)**	1
	223399	KIT-HYD,HOSE,2512F-6CT,RIPPER **(6 CENTER, MODELS 8, 10, 12) (INCLUDES ITEMS 1 - 4)**	1
	224467	KIT-HYD,HOSE,2512F-7CT,RIPPER **(7 CENTER, MODELS 11, 13, 15) (INCLUDES ITEMS 1 - 4)**	1
	224468	KIT-HYD,HOSE,2512F-8CT,RIPPER **(8 CENTER, MODELS 14, 16) (INCLUDES ITEMS 1 - 4)**	1
	223398	KIT-HYD ADAPTER, RIPPER **(INCLUDES ITEMS 5 - 11)**	1
1	147584	HOSE ASSY 3/8X40 #8 JIC SWIV **(5 CENTER)**	2
1	123547	HOSE ASSY 3/8X56 #8 JIC SWIVL **(6 CENTER)**	2
1	122910	HOSE ASSY 3/8X70,#8 JIC SWVL **(7 CENTER)**	2
1	71508987	HOSE ASSY 3/8 X 86 **(8 CENTER)**	2
2	147583	HOSE ASSY 3/8X72 #8 JIC SWIV **(5 CENTER)**	2
2	192481	HOSE ASSY 3/8 X 88 **(6 CENTER)**	2
2	139213	HOSE ASSY 3/8X105 #8JIC SWIVEL **(7 CENTER)**	2
2	166171	HOSE ASSY 3/8X114 #8JIC SWIV **(8 CENTER)**	2
3	141876	HOSE ASSY 3/8X72 #8JICX#8OR	2
4	155529	HOSE WRAP, YELLOW 1" ID X 8"	1
5	141828	COUPLER,MALE 3/4-16 O-RING	2
6	141826	ELBOW 90 1/16 RES	4
7	2-474-010022	MANIFOLD HYDRAULIC, 6 HOSE	1
8	202702-8-8S	ADAPTER #8 O-RING TO #8 TUBE	6
9	1-007-010025	PLUG, 3/4-16 O-RING BOSS	2
10	1-512-010005-09	NUT,HEX,SLFLKG, 1/2-13 GRB	2
11	1-654-010055-11	SCREW,HX CP 1/2-13UNCX3-1/2	2
12	108331	CYLINDER, HYD 4X24 SP **(SEE PAGE 4-26)**	2

Table provided for general use.

NOTES:

2512 Accumulator Bladder

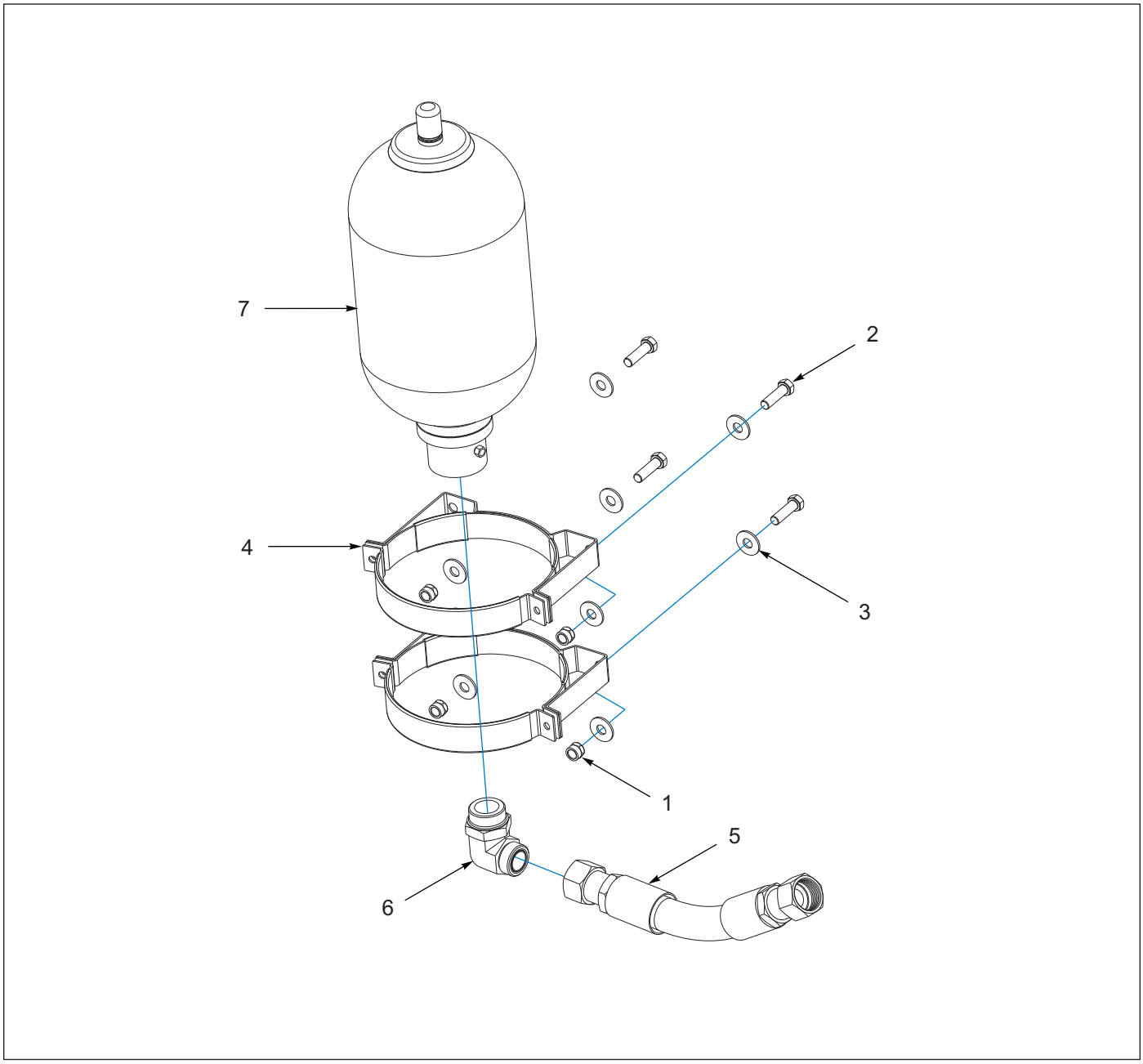

Figure 4-3: 2512 Accumulator Bladder

2512 Accumulator Bladder

ITEM	PART NUMBER	DESCRIPTION	QTY.
1	1-512-010005-09	NUT,HEX,SLFLKG, 1/2-13 GRB	18
2	1-654-010055-04	SCREW,HEX CAP,1/2-13UNCX1-3/4	4
3	1-861-010032-14	WASHER,FLAT 1/2" N ZP/CD	8
4	201321	BRACKET-MOUNTING, ACCUMULATOR **(COMES WITH NUTS, WASHERS AND BOLTS)**	2
5	214307	HOSE,HYD,1-1/4X15-7/32,ASM	1
6	214310	ADAPTER,-20 ORS X -24ORB, 90	1
7	217183	ACCUMULATOR-BLADR, 10 L.3000PSI	1

2512 Hydraulics, 4 Shank

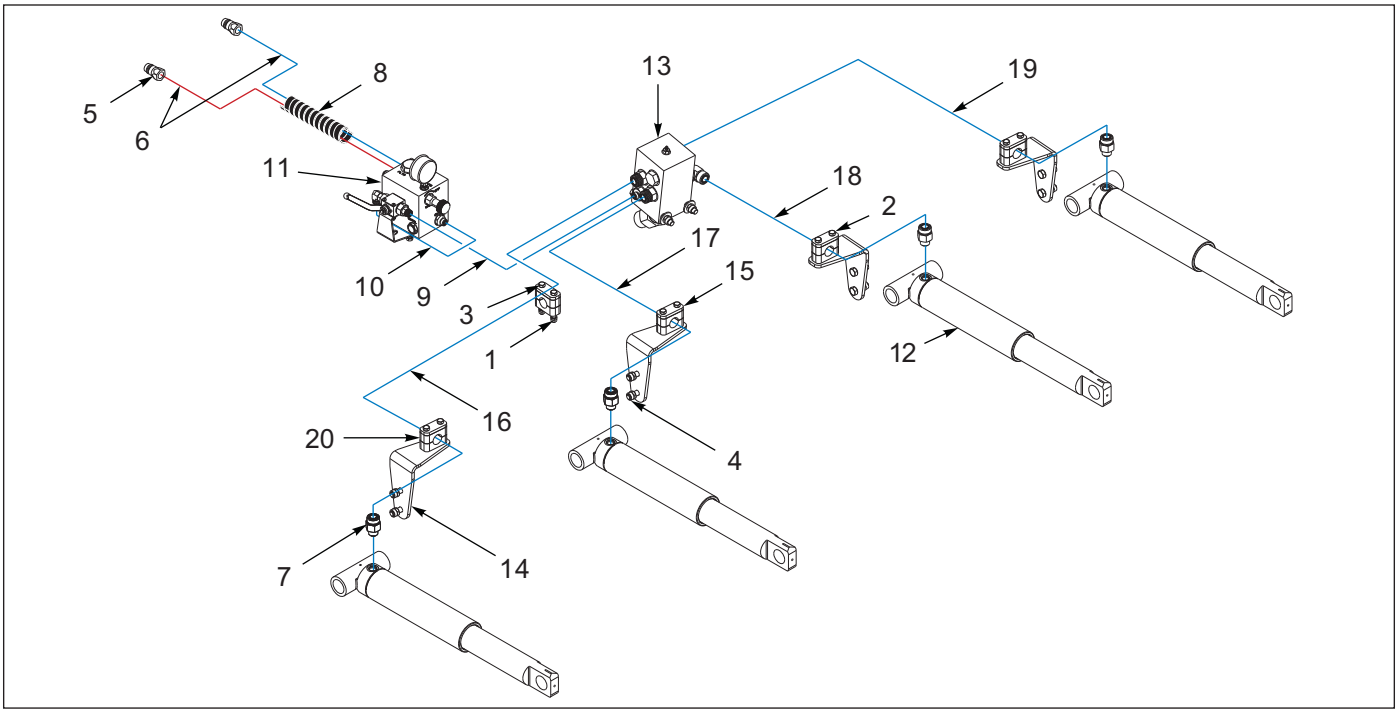

Figure 4-4: 2512 Hydraulics, 4 Shank

2512 Hydraulics, 4 Shank

ITEM	PART NUMBER	DESCRIPTION	QTY.
	214376	KIT-HYDRAULIC, 2512-4	1
	217199	KIT-HYDRAULIC, 2512-4,SETBACK	1
1	1-512-010005-05	NUT, HEX, SLFLKG GRB 3/8-16	10
2	1-654-010051-13	SCREW,HX CP,3/8-16UNCX3,GR5	8
3	1-654-010051-14	SCREW HX CP 3/8-16UNCX3-1/4G5	2
4	1-654-010055-03	SCREW,HEX CAP,1/2-13UNCX1-1/2	8
5	141828	COUPLER,MALE 3/4-16 O-RING	2
6	141877	HOSE ASSY 3/8X75 #8JICX#8OR	2
7	247304	ADAPTER,FLOW CK,-10 ORB,-12ORS **(AFTER 06/07/2023)**	4
7	142337	ADAPTER,#12 ORS X #10 ORB ST **(BEFORE 06/07/2023)**	4
8	155530	HOSE WRAP, BLACK 1" ID X 8"	1
9	156318	HOSE,6ORS-STX6ORS-STX6-30	1
10	162572	HOSE,6ORS-STX6ORS-90MX6-26	1
11	203386	MANIFOLD ASSY DRAFT COMP **(SEE PAGE 4-17)**	1
12	209372	CYLINDER-SA,3 X 9-1/2 DISP **(SEE PAGE 4-22)**	4
13	214305	MANIFOLD-SHANK CYLINDER, 2512 **(SEE PAGE 4-18)**	1
14	214315	BRACKET-CLAMP, HOSE	4
15	214346	PLATE-COVER, CLAMP	5
16	217211	HOSE 3/4X97,-12ORS,-12ORS90S	1
17	217212	HOSE 3/4X67,-12ORS,-12ORS90S **(WITHOUT SETBACK)**	1
17	217216	HOSE 3/4X77,-12ORS,-12ORS90S **(WITH SETBACK)**	1
18	217213	HOSE 3/4X55,-12ORS,-12ORS90S	1
19	217219	HOSE, 3/4X87,-12ORS,-12ORS90S **(WITHOUT SETBACK)**	1
19	217211	HOSE 3/4X97,-12ORS,-12ORS90S **(WITH SETBACK)**	1
20	217988	CLAMP-HOSE, 1-1/8	5

2512 Hydraulics, 5 Shank

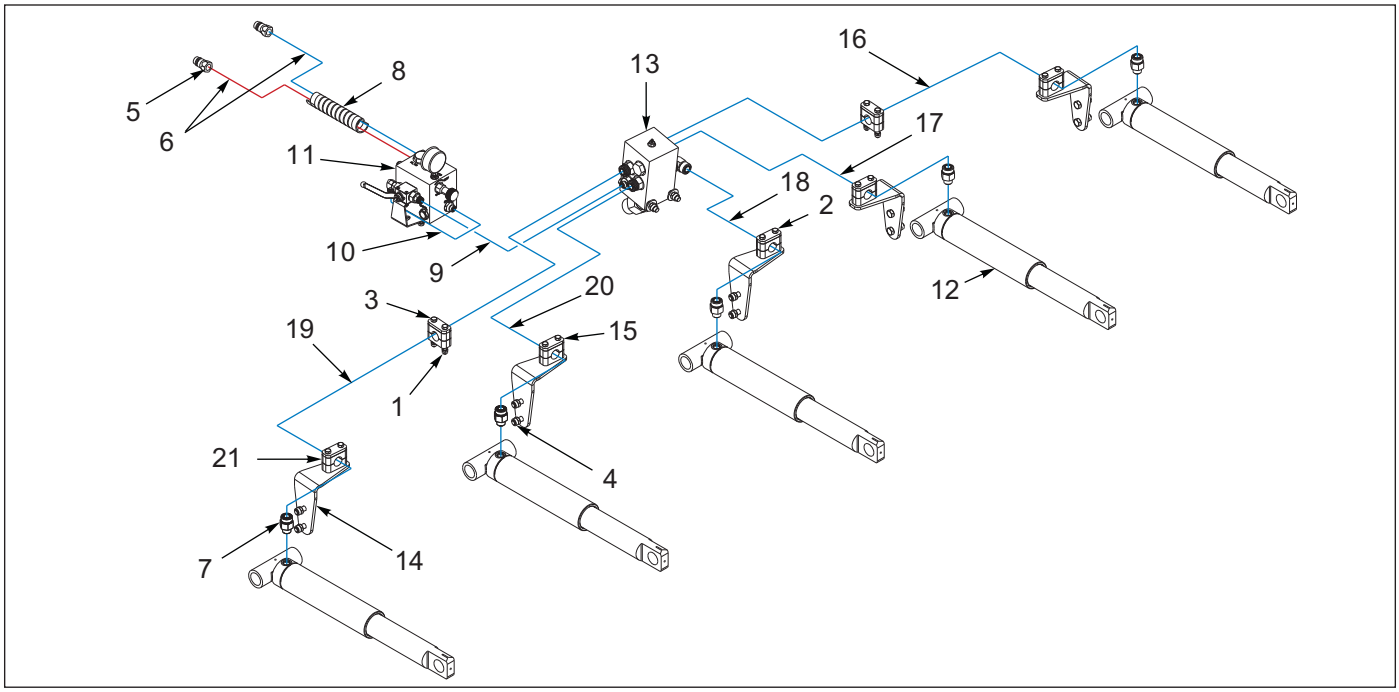

Figure 4-5: 2512 Hydraulics, 5 Shank

2512 Hydraulics, 5 Shank

ITEM	PART NUMBER	DESCRIPTION	QTY.
	214377	KIT-HYDRAULIC, 2512-5	1
	217200	KIT-HYDRAULIC, 2512-5,SETBACK	1
1	1-512-010005-05	NUT, HEX, SLFLKG GRB 3/8-16	14
2	1-654-010051-13	SCREW,HX CP,3/8-16UNCX3,GR5	10
3	1-654-010051-14	SCREW HX CP 3/8-16UNCX3-1/4G5	4
4	1-654-010055-03	SCREW,HEX CAP,1/2-13UNCX1-1/2	8
5	141828	COUPLER,MALE 3/4-16 O-RING	2
6	141877	HOSE ASSY 3/8X75 #8JICX#8OR	2
7	247304	ADAPTER,FLOW CK,-10 ORB,-12ORS **(AFTER 06/07/2023)**	5
7	142337	ADAPTER,#12 ORS X #10 ORB ST **(BEFORE 06/07/2023)**	5
8	155530	HOSE WRAP, BLACK 1" ID X 8"	1
9	156318	HOSE,6ORS-STX6ORS-STX6-30	1
10	162572	HOSE,6ORS-STX6ORS-90MX6-26	1
11	203386	MANIFOLD ASSY DRAFT COMP **(SEE PAGE 4-17)**	1
12	209372	CYLINDER-SA,3 X 9-1/2 DISP **(SEE PAGE 4-22)**	5
13	214305	MANIFOLD-SHANK CYLINDER, 2512 **(SEE PAGE 4-18)**	1
14	214315	BRACKET-CLAMP, HOSE	5
15	214346	PLATE-COVER, CLAMP	5
16	217211	HOSE 3/4X97,-12ORS,-12ORS90S	1
17	217212	HOSE 3/4X67,-12ORS,-12ORS90S **(WITHOUT SETBACK)**	1
17	217216	HOSE, 3/4X77,-12ORS,-12ORS90S **(WITH SETBACK)**	1
18	217213	HOSE 3/4X55,-12ORS,-12ORS90S	1
19	217215	HOSE 3/4X107,-12ORS,-12ORS90S	1
20	217216	HOSE 3/4X77,-12ORS,-12ORS90S **(WITHOUT SETBACK)**	1
20	217219	HOSE 3/4X87,-12ORS,-12ORS90S **(WITH SETBACK)**	1
21	217988	CLAMP-HOSE, 1-1/8	7

2512 Hydraulics, 6 Shank

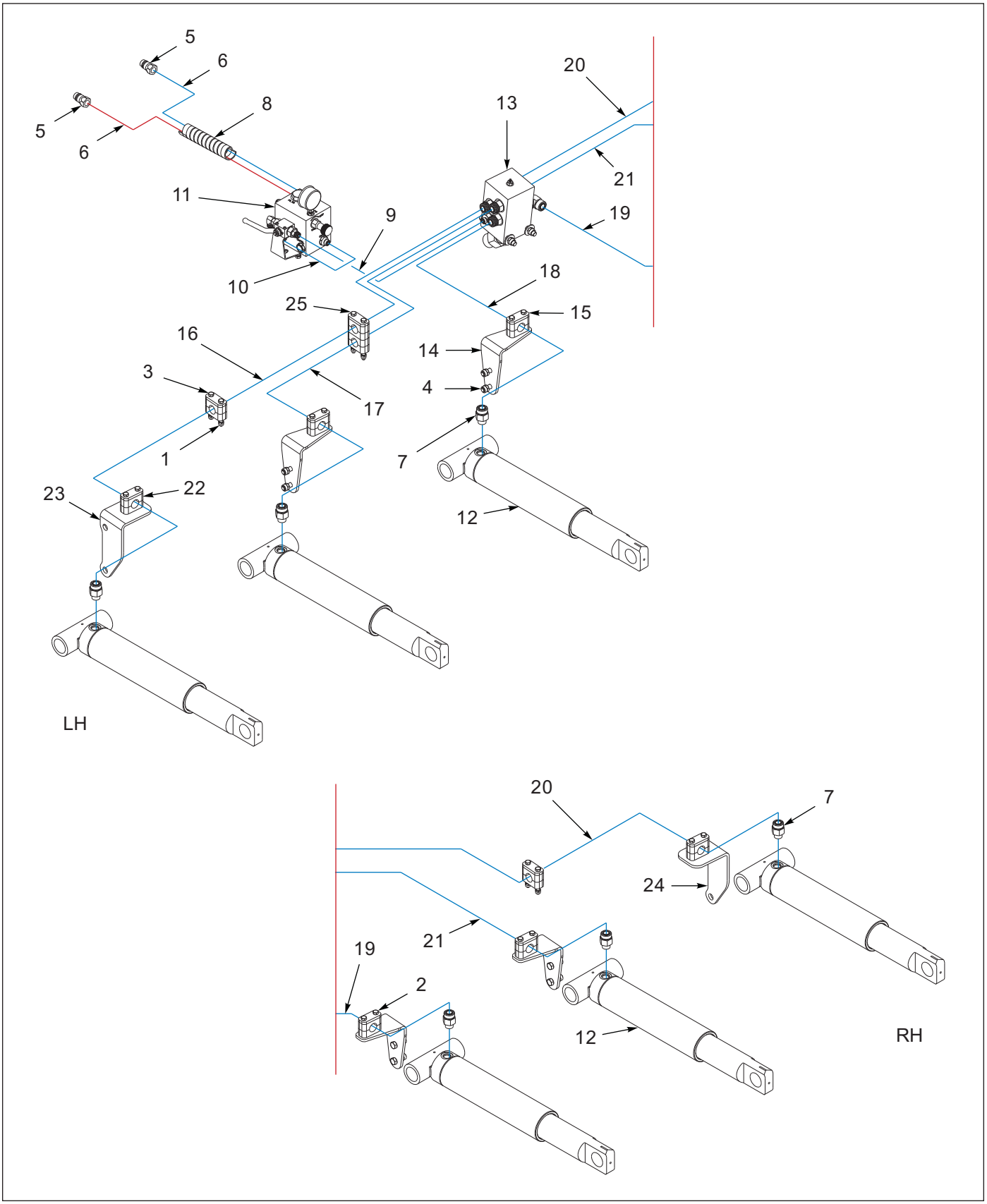

Figure 4-6: 2512 Hydraulics, 6 Shank (1 of 2)

2512 Hydraulics, 6 Shank

ITEM	PART NUMBER	DESCRIPTION	QTY.
	214378	KIT-HYDRAULIC, 2512-6	1
	217201	KIT-HYDRAULIC, 2512-6,SETBACK	1
1	1-512-010005-05	NUT, HEX, SLFLKG GRB 3/8-16	18
2	1-654-010051-13	SCREW,HX CP,3/8-16UNCX3,GR5	12
3	1-654-010051-14	SCREW HX CP 3/8-16UNCX3-1/4G5	4
4	1-654-010055-03	SCREW,HEX CAP,1/2-13UNCX1-1/2	8
5	141828	COUPLER,MALE 3/4-16 O-RING	2
6	141877	HOSE ASSY 3/8X75 #8JICX#8OR	2
7	247304	ADAPTER,FLOW CK,-10 ORB,-12ORS **(AFTER 06/07/2023)**	6
7	142337	ADAPTER,#12 ORS X #10 ORB ST **(BEFORE 06/07/2023)**	6
8	155530	HOSE WRAP, BLACK 1" ID X 8"	1
9	156318	HOSE,6ORS-STX6ORS-STX6-30	1
10	162572	HOSE,6ORS-STX6ORS-90MX6-26	1
11	203386	MANIFOLD ASSY DRAFT COMP **(SEE PAGE 4-17)**	1
12	209372	CYLINDER-SA,3 X 9-1/2 DISP **(SEE PAGE 4-22)**	5
13	214305	MANIFOLD-SHANK CYLINDER, 2512 **(SEE PAGE 4-18)**	1
14	214315	BRACKET-CLAMP, HOSE	4
15	214346	PLATE-COVER, CLAMP	9
16	217210	HOSE 3/4X127,-12ORS,-12ORS90S **(WITHOUT SETBACK)**	1
16	217214	HOSE 3/4X137,-12ORS,-12ORS90S **(WITH SETBACK)**	1
17	217211	HOSE 3/4X97,-12ORS,-12ORS90S	1
18	217212	HOSE 3/4X67,-12ORS,-12ORS90S **(WITHOUT SETBACK)**	1
18	217216	HOSE 3/4X77,-12ORS,-12ORS90S **(WITH SETBACK)**	1
19	217213	HOSE 3/4X55,-12ORS,-12ORS90S	1
20	217217	HOSE 3/4X107,-12ORS,-12ORS90S	1
21	217219	HOSE 3/4X77,-12ORS,-12ORS90S **(WITHOUT SETBACK)**	1
21	217211	HOSE 3/4X97,-12ORS,-12ORS90S **(WITH SETBACK)**	1
22	217988	CLAMP-HOSE, 1-1/8	10
23	214260	BRACKET-MOUNT, HOSE CLAMP, LH	1
24	214261	BRACKET-MOUNT, HOSE CLAMP, RH	1
25	185216	SCREW,HXCAP3/8-16UNCX5-1/4GR5	2

2512 Hydraulics, 7 Shank (Rigid and Folding)

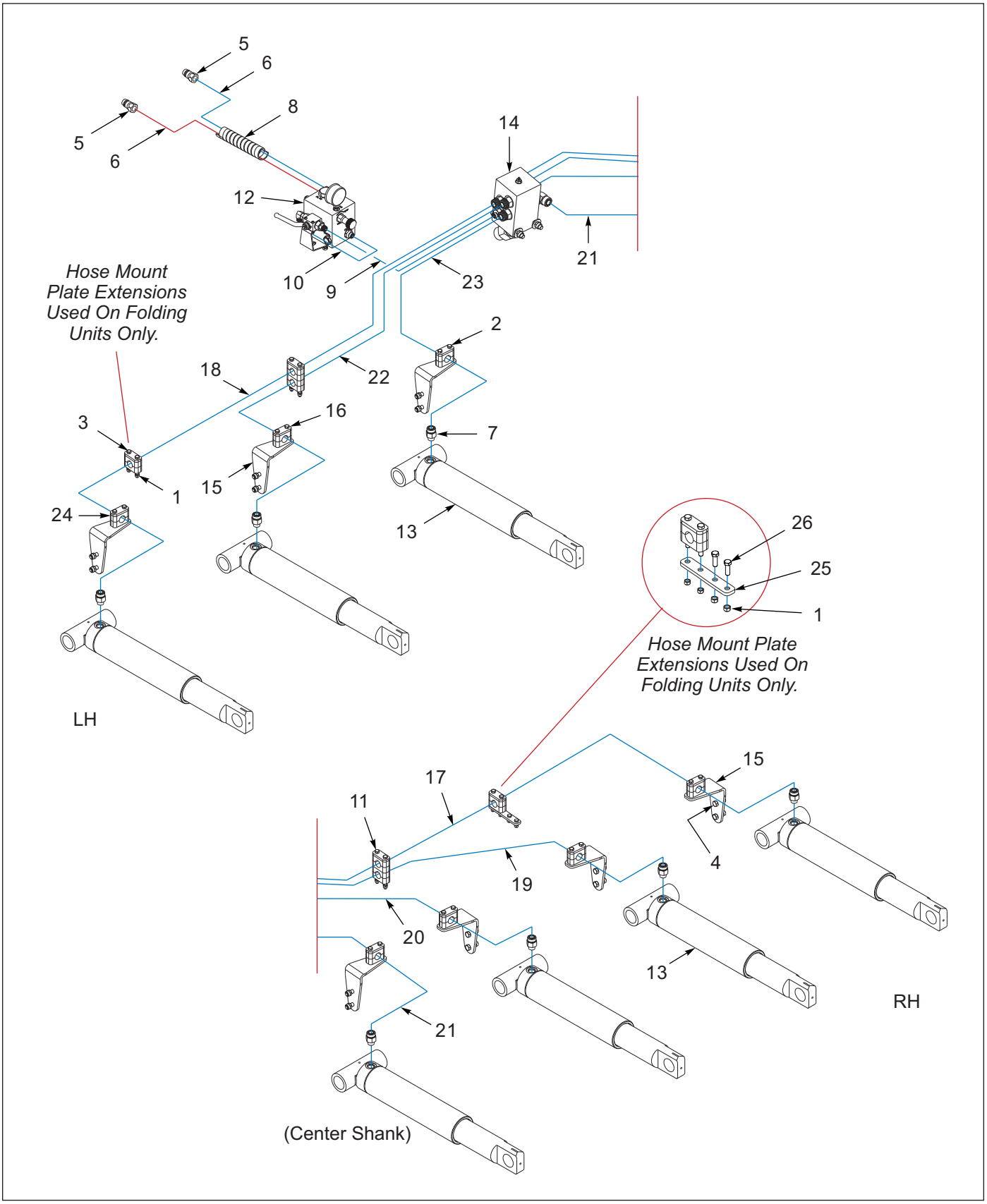

Figure 4-7: 2512 Hydraulics, 7 Shank (Rigid and Folding) (1 of 2)

2512 Hydraulics, 7 Shank (Rigid and Folding)

ITEM	PART NUMBER	DESCRIPTION	QTY.
	214297	KIT-HYDRAULIC, 2512-7 **(RIGID)**	1
	217202	KIT-HYDARULIC, 2512-7, SETBACK **(RIGID)**	1
	221737	KIT-HYD HOSE, 2512F-7 **(FOLDING)**	1
	221747	KIT-HYD,HOSE,2512F-7,W/SB **(FOLDING)**	1
1	1-512-010005-05	NUT, HEX, SLFLKG GRB 3/8-16	26
2	1-654-010051-13	SCREW,HX CP,3/8-16UNCX3,GR5	14
3	1-654-010051-14	SCREW HX CP 3/8-16UNCX3-1/4G5	4
4	1-654-010055-03	SCREW,HEX CAP,1/2-13UNCX1-1/2	14
5	141828	COUPLER,MALE 3/4-16 O-RING	2
6	141877	HOSE ASSY 3/8X75 #8JICX#8OR	2
7	247304	ADAPTER,FLOW CK,-10 ORB,-12ORS **(AFTER 06/07/2023)**	7
7	142337	ADAPTER,#12 ORS X #10 ORB ST **(BEFORE 06/07/2023)**	7
8	155530	HOSE WRAP, BLACK 1" ID X 8"	1
9	156318	HOSE,6ORS-STX6ORS-STX6-30	1
10	162572	HOSE,6ORS-STX6ORS-90MX6-26	1
11	185216	SCREW, HEX CAP 3/8-16UNCX5-184 GR5	4
12	203386	MANIFOLD ASSY DRAFT COMP **(SEE PAGE 4-17)**	1
13	209372	CYLINDER-SA,3 X 9-1/2 DISP **(SEE PAGE 4-22)**	7
14	214305	MANIFOLD-SHANK CYLINDER, 2512 **(SEE PAGE 4-18)**	1
15	214315	BRACKET-CLAMP, HOSE	7
16	214346	PLATE-COVER, CLAMP	11
17	227280	HOSE,3/4X142,-12ORS,-12ORS90S **(FOLDING AFTER 11/01/2021)**	1
17	217210	HOSE 3/4X127,-12ORS,-12ORS90S **(RIGID)**	1
18	227281	HOSE,3/4X152,-12ORS,-12ORS90S **(FOLDING AFTER 11/01/2021)**	1
18	217214	HOSE 3/4X137,-12ORS,-12ORS90S **(RIGID)**	1
19	217211	HOSE 3/4X97,-12ORS,-12ORS90S **(WITHOUT SETBACK)**	1
19	217215	HOSE 3/4X107,-12ORS,-12ORS90S **(WITH SETBACK)**	1
20	217212	HOSE 3/4X67,-12ORS,-12ORS90S	1
21	217213	HOSE 3/4X55,-12ORS,-12ORS90S **(WITHOUT SETBACK)**	1
21	217212	HOSE 3/4X67,-12ORS,-12ORS90S **(WITH SETBACK)**	1
22	217215	HOSE 3/4X107,-12ORS,-12ORS90S **(WITHOUT SETBACK)**	1
22	217217	HOSE,3/4X117,-12ORS,-12ORS90S **(WITH SETBACK)**	1
23	217216	HOSE 3/4X77,-12ORS,-12ORS90S	1
24	217988	CLAMP-HOSE, 1-1/8	15
25	227876	PLATE-EXTENSION, HOSE MOUNT **(FOLDING UNITS ONLY)**	6
26	1-654-010051-07	SCREW, HEX CAP, 3/8-16UNCX1-1/2 **(FOLDING UNITS ONLY)**	4

2512 Hydraulics, 8 Shank (Rigid and Folding)

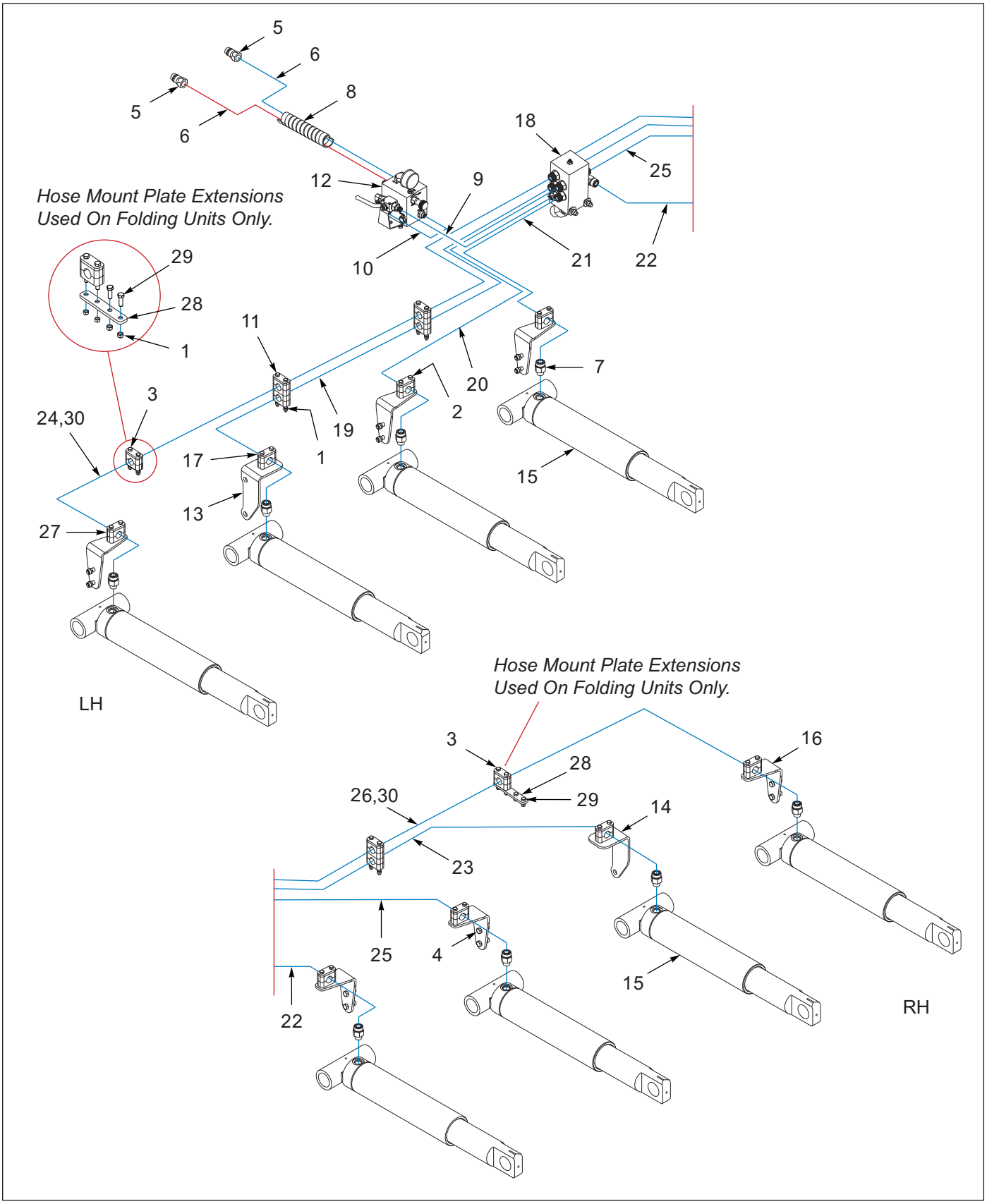

Figure 4-8: 2512 Hydraulics, 8 Shank (Rigid and Folding) (1 of 2)

2512 Hydraulics, 8 Shank (Rigid and Folding)

ITEM	PART NUMBER	DESCRIPTION	QTY.
	214381	KIT-HYDRAULIC, 2512-8 **(RIGID)**	1
	217203	KIT-HYRDAULIC, 2512-8,SETBACK **(RIGID)**	1
	221738	KIT-HYD,HOSE,2512F-8 **(FOLDING)**	1
	221748	KIT-HYD,HOSE,2512F-8,W/SB **(FOLDING)**	1
1	1-512-010005-05	NUT, HEX, SLFLKG GRB 3/8-16	30
2	1-654-010051-13	SCREW,HX CP,3/8-16UNCX3,GR5	16
3	1-654-010051-14	SCREW HX CP 3/8-16UNCX3-1/4G5	4
4	1-654-010055-03	SCREW,HEX CAP,1/2-13UNCX1-1/2	12
5	141828	COUPLER,MALE 3/4-16 O-RING	2
6	141877	HOSE ASSY 3/8X75 #8JICX#8OR	2
7	247304	ADAPTER,FLOW CK,-10 ORB,-12ORS **(AFTER 06/07/2023)**	8
7	142337	ADAPTER,#12 ORS X #10 ORB ST **(BEFORE 06/07/2023)**	8
8	155530	HOSE WRAP, BLACK 1" ID X 8"	1
9	156318	HOSE,6ORS-STX6ORS-STX6-30	1
10	162572	HOSE,6ORS-STX6ORS-90MX6-26	1
11	185216	SCREW, HEX CAP 3/8-16UNCX5-184 GR5	6
12	203386	MANIFOLD ASSY DRAFT COMP **(SEE PAGE 4-17)**	1
13	214260	BRACKET-MOUNT, HOSE CLAMP, LH	1
14	214261	BRACKET-MOUNT, HOSE CLAMP, RH	1
15	209372	CYLINDER-SA,3 X 9-1/2 DISP **(SEE PAGE 4-22)**	8
16	214315	BRACKET-CLAMP, HOSE	6
17	214346	PLATE-COVER, CLAMP	13
18	214355	MANIFOLD-SHANK CYLINDER, 2512 **(SEE PAGE 4-18)**	1
19	217210	HOSE 3/4X127,-12ORS,-12ORS90S **(WITHOUT SETBACK)**	1
19	217214	HOSE 3/4X137,-12ORS,-12ORS90S **(WITH SETBACK)**	1
20	217211	HOSE 3/4X97,-12ORS,-12ORS90S	1
21	217212	HOSE 3/4X67,-12ORS,-12ORS90S **(WITHOUT SETBACK)**	1
21	217216	HOSE 3/4X77,-12ORS,-12ORS90S **(WITH SETBACK)**	1
22	217213	HOSE 3/4X55,-12ORS,-12ORS90S	1
23	217217	HOSE 3/4X117,-12ORS,-12ORS90S	1
24	217218	HOSE, 3/4X157,-12ORS,-12ORS90S **(BEFORE 11/01/2021)** **(SEE #30 FOR AFTER 11/01/2021)**	1
25	217219	HOSE 3/4X77,-12ORS,-12ORS90S **(WITHOUT SETBACK)**	1
25	217211	HOSE 3/4X97,-12ORS,-12ORS90S **(WITH SETBACK)**	1
26	227282	HOSE,3/4X163,-12ORS,-12ORS90S **(WITHOUT SETBACK)** **(AFTER 11/01/2021)**	1
26	217220	HOSE, 3/4X147,-12ORS,-12ORS90S **(WITHOUT SETBACK)** **(BEFORE 11/01/2021)**	1
26	217218	HOSE 3/4X157,-12ORS,-12ORS90S **(WITH SETBACK BEFORE 11/01/2021)** **(SEE #30 FOR WITH SETBACK AFTER 11/01/2021)**	1
27	217988	CLAMP-HOSE, 1-1/8	18
28	227876	PLATE-EXTENSION, HOSE MOUNT **(FOLDING UNITS ONLY)**	6
29	1-654-010051-07	SCREW, HEX CAP, 3/8-16UNCX1-1/2 **(FOLDING UNITS ONLY)**	4
30	227283	HOSE,3/4X172,-12ORS,-12ORS90S **(AFTER 11/01/2021)** **(OUTER LH HOSE, QTY=1)** **(OUTER RH HOSE WITH SETBACK, QTY=1)**	REF

2512 Hydraulics, 9 Shank (Folding)

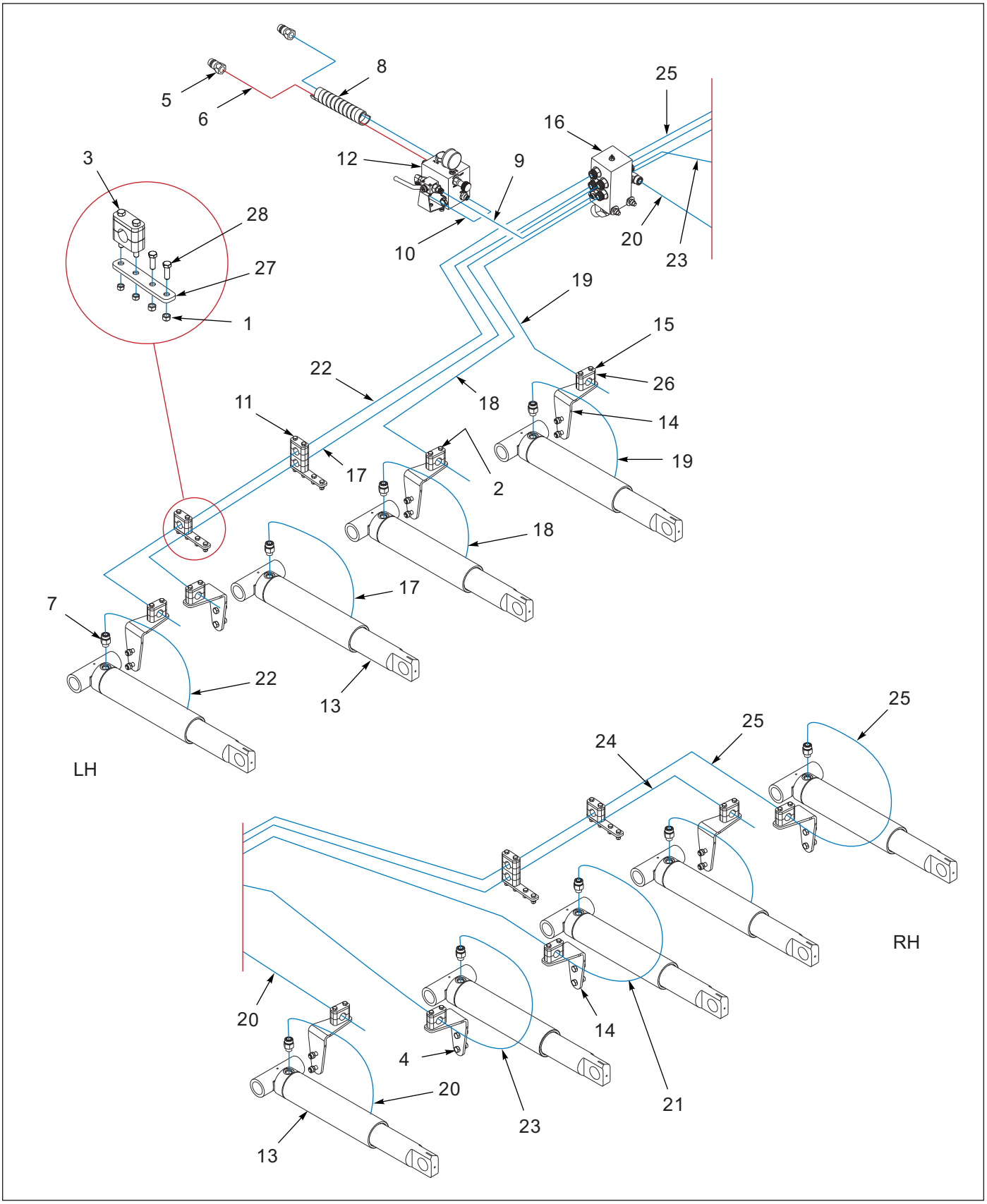

Figure 4-9: 2512 Hydraulics, 9 Shank (Folding) (1 of 2)

2512 Hydraulics, 9 Shank (Folding)

ITEM	PART NUMBER	DESCRIPTION	QTY.
	221739	KIT-HYD,HOSE,2512F-9	1
	221749	KIT-HYD,HOSE,2512F-9,W/SB	1
1	1-512-010005-05	NUT, HEX, SLFLKG GRB 3/8-16	26
2	1-654-010051-13	SCREW,HX CP,3/8-16UNCX3,GR5	14
3	1-654-010051-14	SCREW HX CP 3/8-16UNCX3-1/4G5	4
4	1-654-010055-03	SCREW,HEX CAP,1/2-13UNCX1-1/2	14
5	141828	COUPLER,MALE 3/4-16 O-RING	2
6	141877	HOSE ASSY 3/8X75 #8JICX#8OR	2
7	247304	ADAPTER,FLOW CK,-10 ORB,-12ORS **(AFTER 06/07/2023)**	9
7	142337	ADAPTER,#12 ORS X #10 ORB ST **(BEFORE 06/07/2023)**	9
8	155530	HOSE WRAP, BLACK 1" ID X 8"	1
9	156318	HOSE,6ORS-STX6ORS-STX6-30	1
10	162572	HOSE,6ORS-STX6ORS-90MX6-26	1
11	185216	SCREW, HEX CAP 3/8-16UNCX5-184 GR5	4
12	203386	MANIFOLD ASSY DRAFT COMP **(SEE PAGE 4-17)**	1
13	209372	CYLINDER-SA,3 X 9-1/2 DISP **(SEE PAGE 4-22)**	9
14	214315	BRACKET-CLAMP, HOSE	9
15	214346	PLATE-COVER, CLAMP	11
16	214355	MANIFOLD-SHANK CYLINDER, 2512 **(SEE PAGE 4-18)**	1
17	227281	HOSE 3/4X152,-12ORS,-12ORS90S **(WITHOUT SETBACK)**	1
17	227282	HOSE 3/4X162,-12ORS,-12ORS90S **(WITH SETBACK)**	1
18	217215	HOSE 3/4X107,-12ORS,-12ORS90S	1
19	217216	HOSE 3/4X77,-12ORS,-12ORS90S **(WITHOUT SETBACK)**	1
19	217219	HOSE 3/4X87,-12ORS,-12ORS90S **(WITH SETBACK)**	1
20	217213	HOSE 3/4X55,-12ORS,-12ORS90S	1
21	217211	HOSE 3/4X97,-12ORS,-12ORS90S	1
22	227284	HOSE,3/4X182,-12ORS,-12ORS90S **(AFTER 11/01/2021)**	1
22	217221	HOSE, 3/4X167,-12ORS,-12ORS90S **(BEFORE 11/01/2021)**	1
23	217212	HOSE 3/4X67,-12ORS,-12ORS90S **(WITHOUT SETBACK)**	1
23	217216	HOSE 3/4X77,-12ORS,-12ORS90S **(WITH SETBACK)**	1
24	227280	HOSE, 3/4X142,-12ORS,-12ORS90S **(WITHOUT SETBACK)**	1
24	217281	HOSE, 3/4X152,-12ORS,-12ORS90S **(WITH SETBACK)**	1
25	227283	HOSE,3/4X172,-12ORS,-12ORS90S **(AFTER 11/01/2021)**	1
25	217218	HOSE,3/4X157,-12ORS,-12ORS90S **(BEFORE 11/01/2021)**	1
26	217988	CLAMP-HOSE, 1-1/8	15
27	227876	PLATE-EXTENSION, HOSE MOUNT **(FOLDING UNITS ONLY)**	8
28	1-654-010051-07	SCREW, HEX CAP, 3/8-16UNCX1-1/2 **(FOLDING UNITS ONLY)**	8

Manifold-Draft Assembly

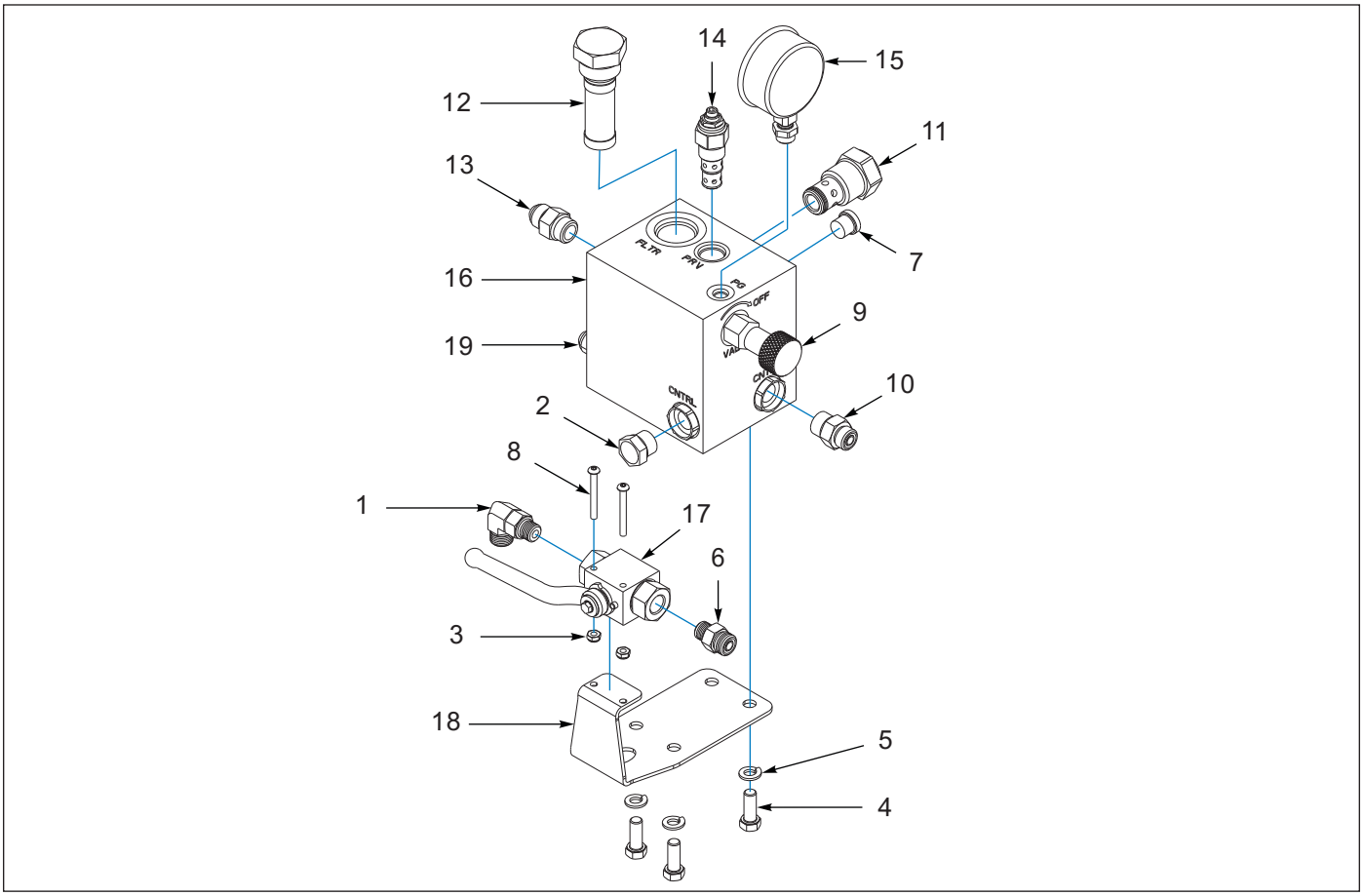

Figure 4-10: Manifold-Draft Assembly

Manifold-Draft Assembly

ITEM	PART NUMBER	DESCRIPTION	QTY.
1	0018136	ADAPTER,6ORSX6ORB, 90 S	1
2	1-007-010025	PLUG, 3/4-16 O-RING BOSS	1
3	1-512-010003-05	NUT HEX SLFLKG W/NYL 10-32	2
4	1-654-010051-05	SCREW,HEX CAP 3/8-16UNCX1 GR5	3
5	1-861-010034-11	WASHER, LKG HLCL SPR, 3/8	3
6	104582	ADAPTER,#6 ORS X #6 ORB ST	1
7	121028	PLUG #4 SAE M O-R BOSS HX SKT	2
8	146693	SCREW, BHSC, 10-32 X 1.75	2
9	171000	CARTRIDGE, SHUT OFF VALVE	1
10	189872	ADAPTER,#6ORS X #8ORB STR	1
11	195196	VALVE - CHECK, CVH103PV	1
12	195198	FILTER-HIGH PRESS, CF/CE-12-10	1
13	202702-8-8S	ADAPTER #8 O-RING TO #8 TUBE	1
14	201283	VALVE-PRESS RED RELV 600-3000	1
15	201291	GAUGE-HYD PRESSURE,3000,-4 ORB	1
16	203384	MANIFOLD DRAFT COMP	1
17	214319	VALVE-BALL, -6 SAE	1
18	214384	BRACKET-VALVE MOUNT	1
19	4K607	RESTRICTOR 3/4-16	1

Manifold-Shank Cylinder Assembly

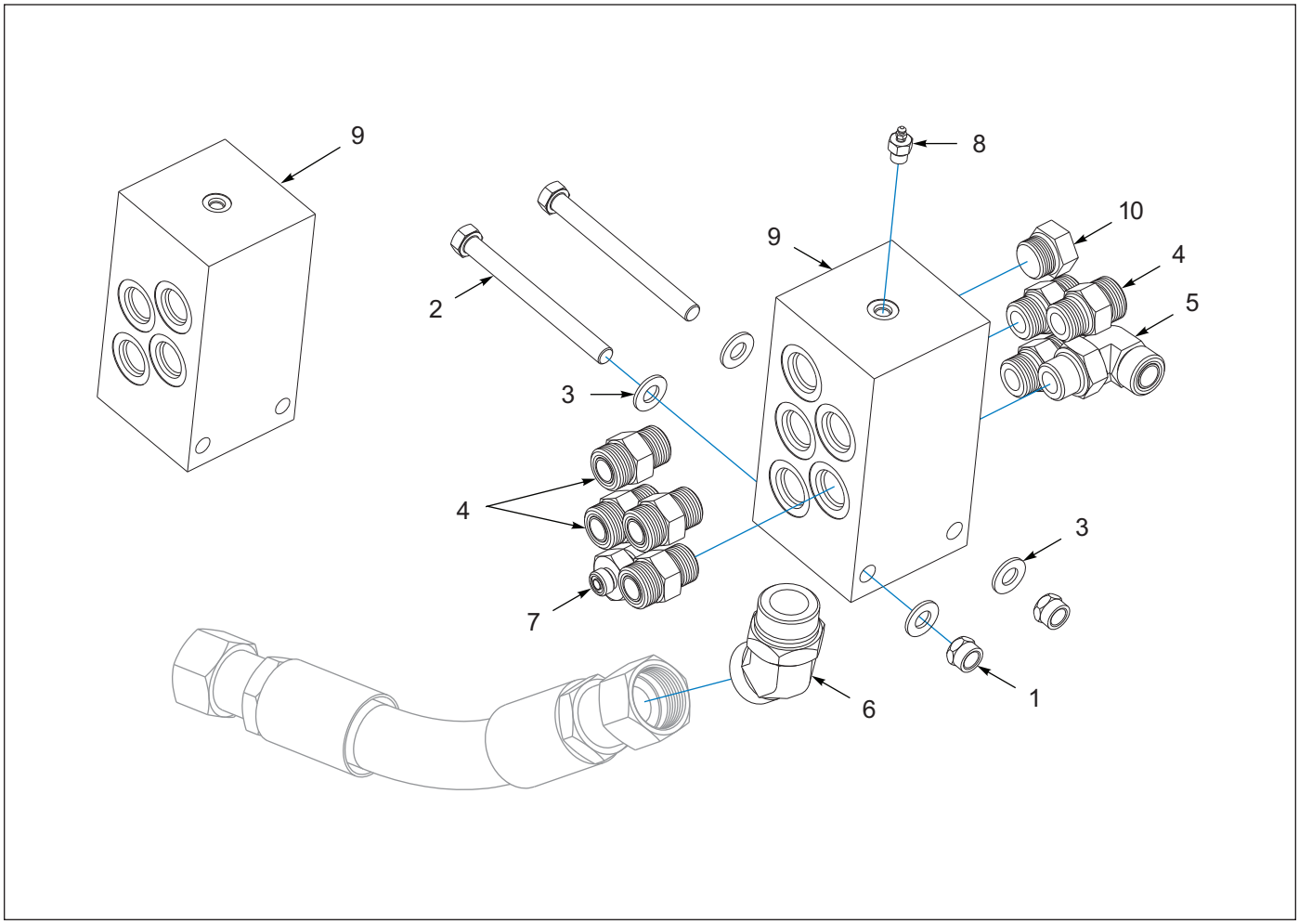

Figure 4-11: Manifold-Shank Cylinder Assembly

Manifold-Shank Cylinder Assembly

ITEM	PART NUMBER	DESCRIPTION	QTY.
1	1-512-010005-09	NUT,HEX,SLFLKG, 1/2-13 GRB	2
2	1-654-010055-16	SCREW HEX CAP 1/2-13X5-1/2GR5	2
3	1-861-010032-14	WASHER, FLAT 1/2" N ZP/CD	4
4	104382	ADAPTER,#12 ORS X #12 ORB STP **(QTY SUBJECT TO MANIFOLD AND MODEL)**	REF
5	110116	ADAPTER,#12ORB X #12ORS 90DEG	1
6	171589	ADAPTER,#20ORS X #20ORB,45 ELB	1
7	171591	ADAPTER,#6ORS X #120RB, STR	1
8	189739	ASSY,#4ORB BLEEDER PLUG	1
9	214355	MANIFOLD-SHANK CYLINDER, 2512 **(8R, 8R W/SB, 8F, 8F W/SB, 9F, 9F W/SB, 10F, 10F W/SB, 12F, 12F W/SB, 14F, 14F W/SB, 16F, 16F W/SB)**	1
9	214305	MANIFOLD-SHANK CYLINDER, 2512 **(4R, 4R W/SB, 5R, 5R W/SB, 6R, 6R W/SB, 7R, 7R W/SB, 7F, 7F W/SB)**	1
10	900598-12S	PLUG, O-RING BOSS #12	1

Wing Lock Kit - Optional

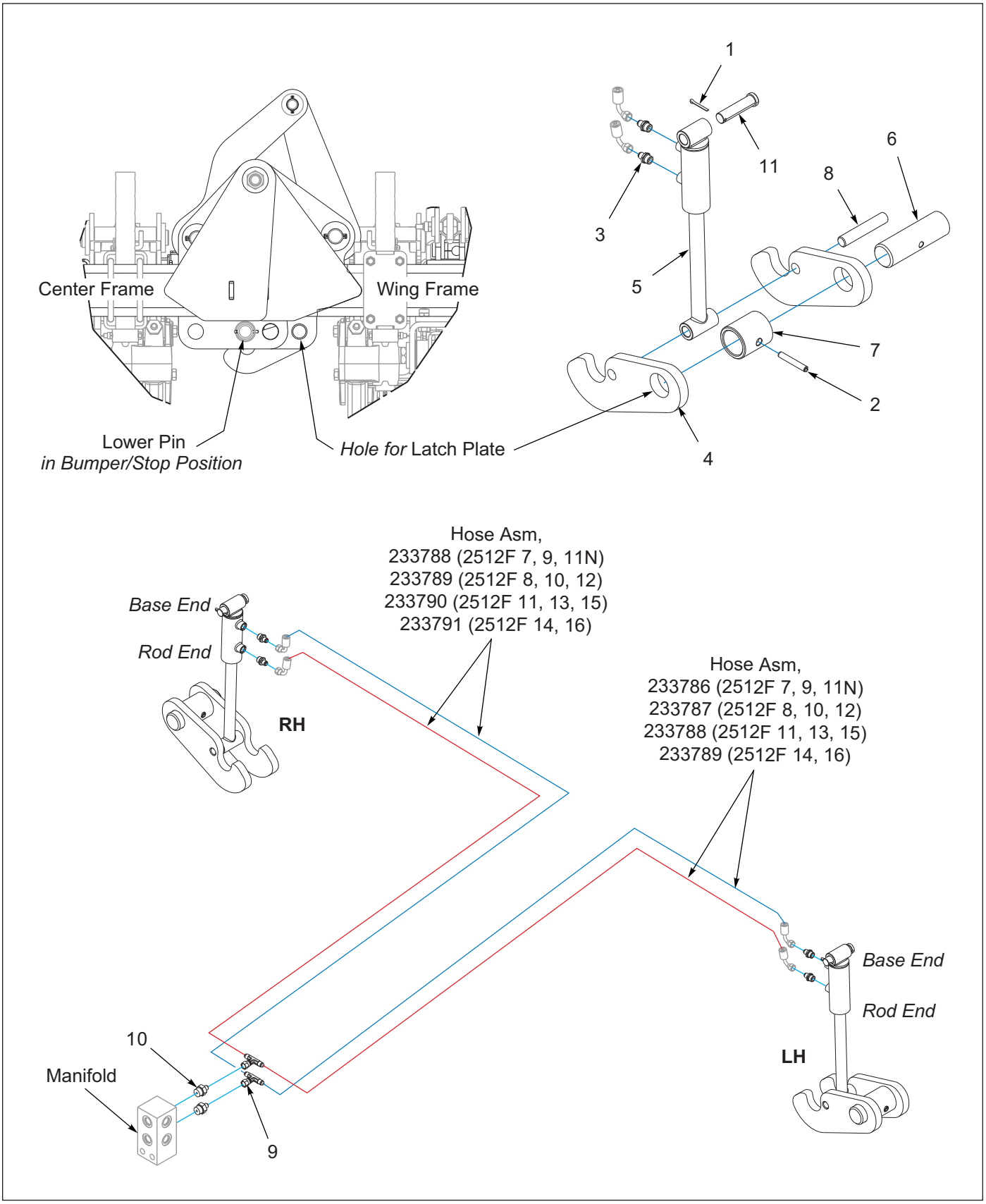

Figure 4-12: Wing Lock Kit - Optional

Wing Lock Kit - Optional

ITEM	PART NUMBER	DESCRIPTION	QTY.			
	233782	KIT-HYDR WING LOCK,2512F, 5CT **(2512F 7, 9, 11N)**	1	- -	- -	- -
	233783	KIT-HYDR WING LOCK,2512F, 6CT **(2512F 8, 10, 12)**	- -	1	- -	- -
	233784	KIT-HYDR WING LOCK,2512F, 7CT **(2512F 11, 13, 15)**	- -	- -	1	- -
	233785	KIT-HYDR WING LOCK,2512F, 8CT **(2512F 14, 16)**	- -	- -	- -	1
1	1-557-010362-40	PIN, COTTER 5/32X1-1/4	2	2	2	2
2	1-647-010004257	PIN,SPRING,SLOTTED 3/8X2-1/2	2	2	2	2
3	202702-6-4S	ADAPTER,STR,#6 O-RING X #4JIC	4	4	4	4
4	230889	PLATE-LATCH	4	4	4	4
5	230890	CYLINDER,1-1/2X1-1/2,3000PSI **(SEE PAGE 4-21)**	2	2	2	2
6	230894	PIN-LATCH, WING LOCK	2	2	2	2
7	230895	SLEEVE-SPACKER, LATCH	2	2	2	2
8	230896	PIN-CYLINDER, LATCH	2	2	2	2
9	233781	ADAPTER-TEE,6600-04,04,04	2	2	2	2
10	40-0665-02	ADAPTER,ST,37 FLARE,OR, 4-8	2	2	2	2
11	7D642	CLEVIS PIN	2	2	2	2
12	233786	HOSE, 1/4X74,04FJX,04FX90S	2	- -	- -	- -
13	233788	HOSE, 1/4X104,04FJX,04FX90S	2	- -	2	- -
14	233787	HOSE, 1/4X89,04FJX,04FX90S	- -	2	- -	- -
15	233789	HOSE, 1/4X119,04FJX,04FX90S	- -	2	- -	2
16	233790	HOSE, 1/4X134,04FJX,04FX90S	- -	- -	2	- -
17	233791	HOSE, 1/4X149,04FJX,04FX90S	- -	- -	- -	2

Hydraulic Cylinder, 1-1/2 x 1-1/2 - 230890

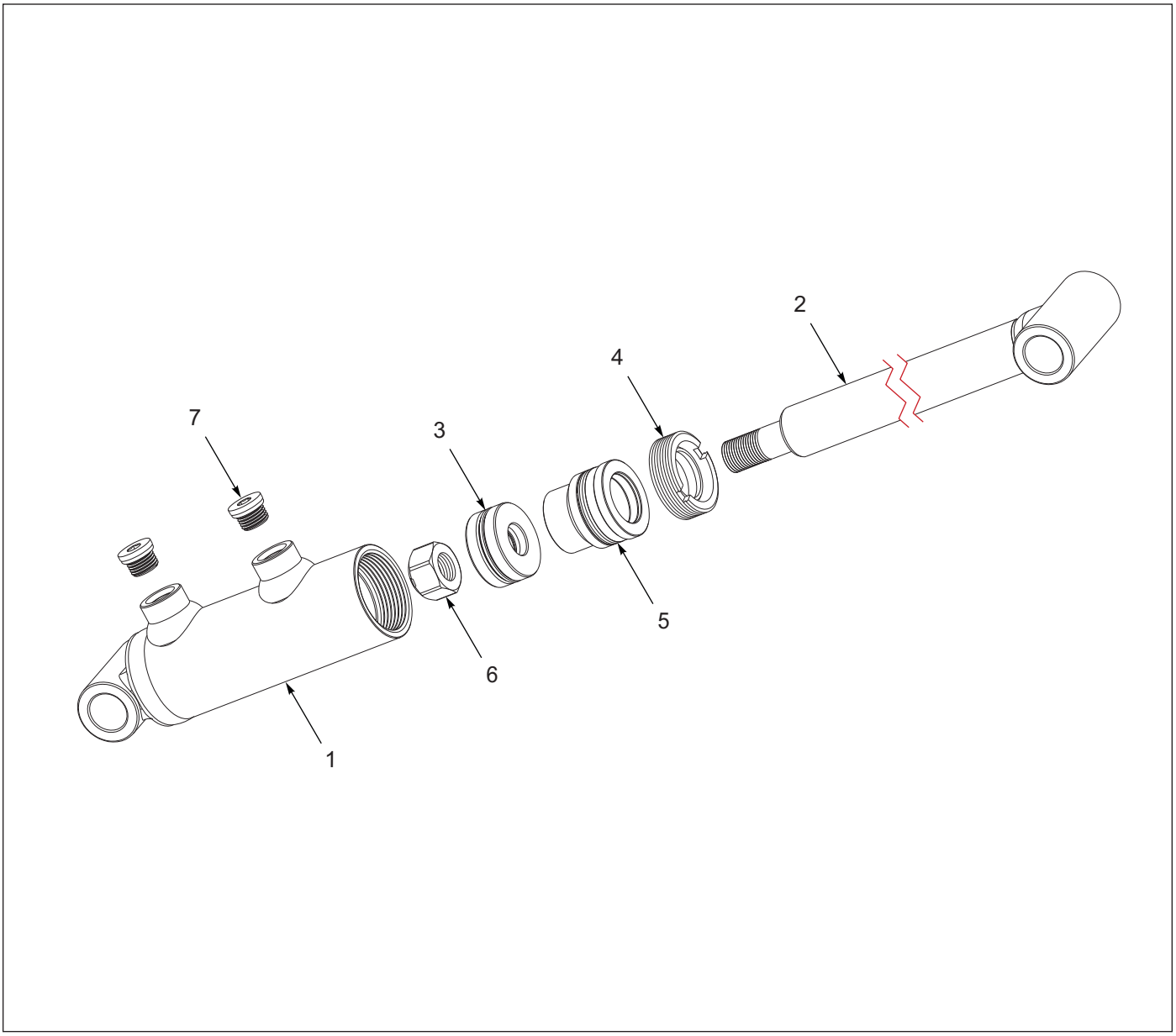

Figure 4-13: Hydraulic Cylinder, 1-1/2 x 1-1/2 - 230890

Hydraulic Cylinder, 1-1/2 x 1-1/2 - 230890

ITEM	PART NUMBER	DESCRIPTION	QTY.
	230890	CYLINDER,1-1/2X1-1/2,3000PSI **(LOCK KIT)**	1
1	- - - - -	BARREL ASM	1
2	- - - - -	ROD ASM	1
3	- - - - -	PISTON CR 1-1/2" OD X 5/8" ID X .700 LG	1
4	- - - - -	RETAINER, 1-1/2" OD X 1" ID X 1/2" LG	1
5	- - - - -	BEARING 1-1/2" OD X 1" ID X 1-1/2" LG	1
6	- - - - -	LOCKNUT 5/8"	1
7	- - - - -	9/16 SAE PLUG (2A0126)	2
8	240161	KIT, SEAL, 230890 CYL	1

Hydraulic Cylinder, 3 x 9-1/2 - 209372

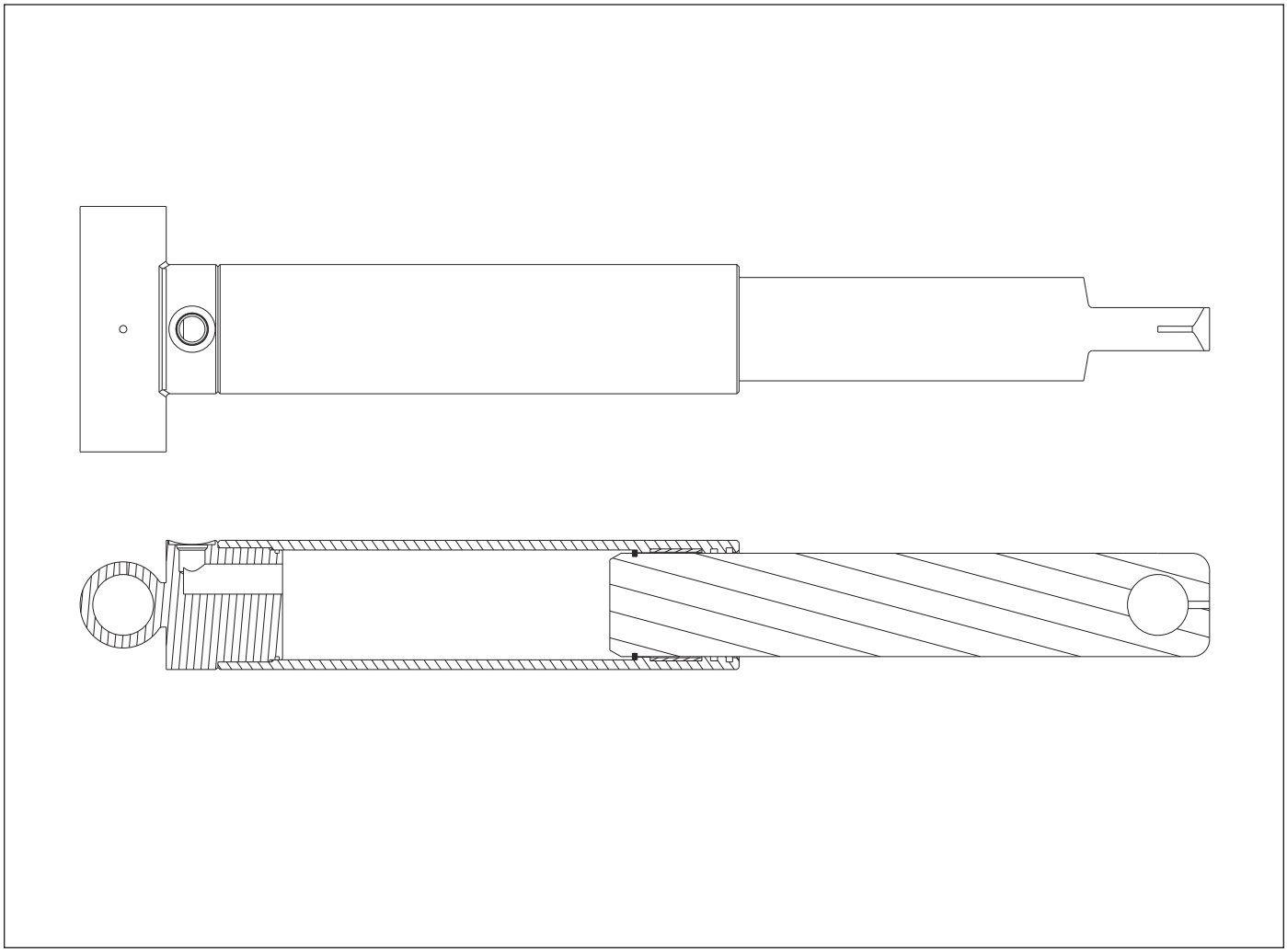

Figure 4-14: Hydraulic Cylinder, 3 x 9-1/2 - 209372

Hydraulic Cylinder, 3 x 9-1/2 - 209372

ITEM	PART NUMBER	DESCRIPTION	QTY.
	209372	CYLINDER-SA,3 X 9-1/2 DISP **(SHANK)**	1
	224786	KIT-PACKING,3X9.5X3	1

Hydraulic Cylinder, 4 x 24 - 108331

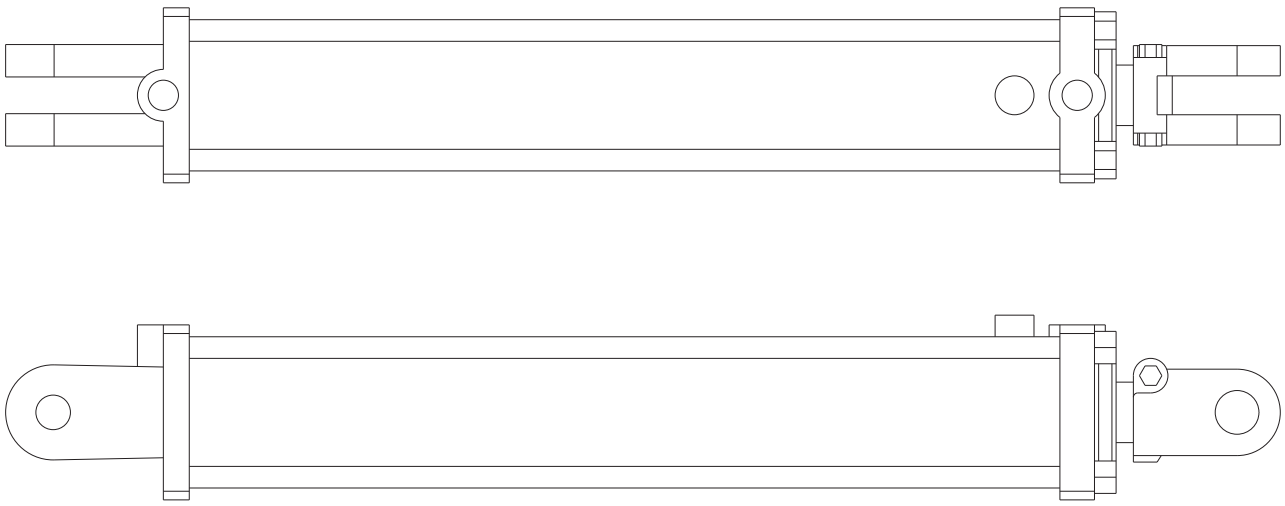

Figure 4-15: Hydraulic Cylinder, 4 x 24 - 108331

Hydraulic Cylinder, 4 x 24 - 108331

ITEM	PART NUMBER	DESCRIPTION	QTY.
	108331	CYLINDER, HYD 4X24 SP **(FOLDING) (BEFORE 11/01/2021)**	1
	224787	KIT-PACKING,4X24X1.75	1

Hydraulic Cylinder, 5 x 30 - 233870

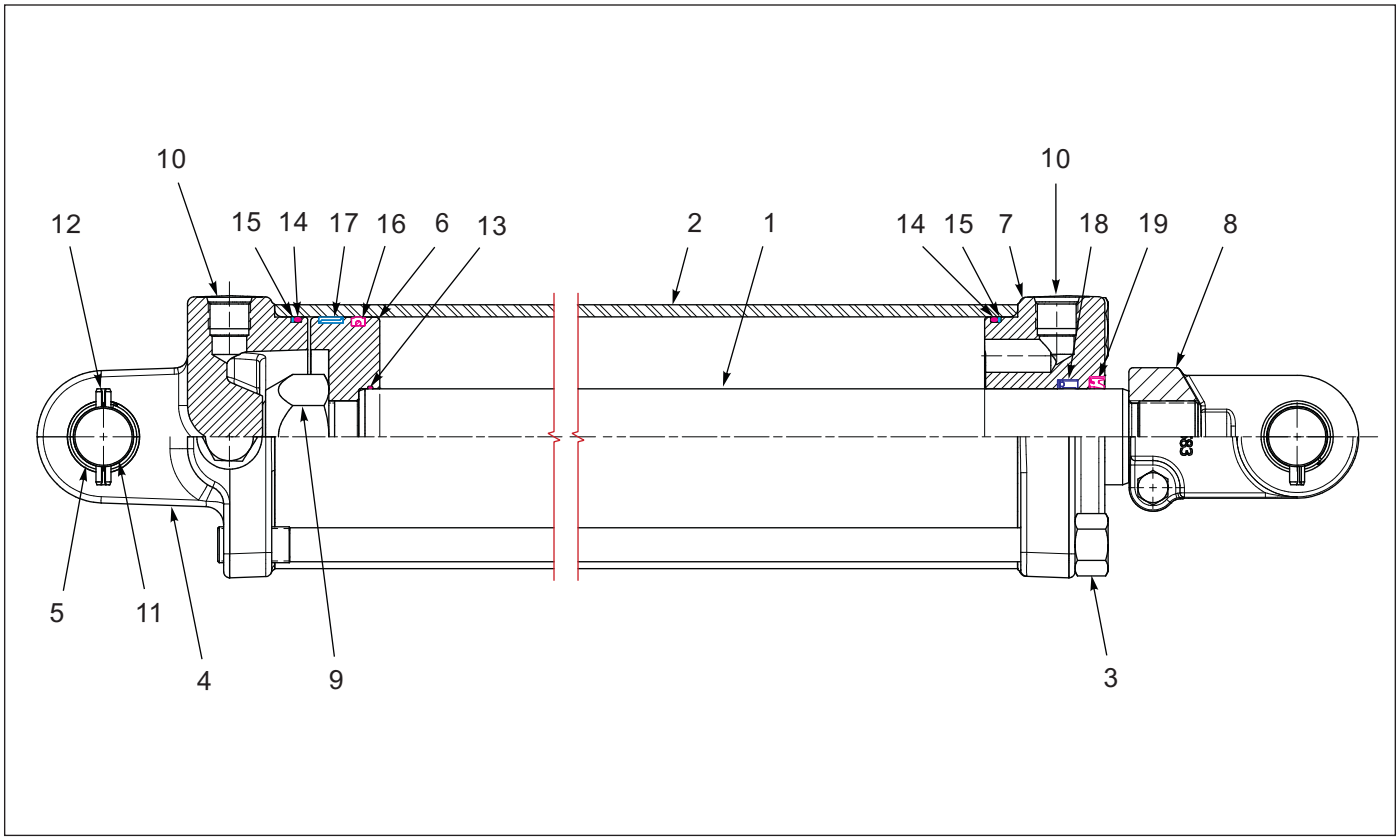

Figure 4-16: Hydraulic Cylinder, 5 x 30 - 233870

Hydraulic Cylinder, 5 x 30 - 233870

ITEM	PART NUMBER	DESCRIPTION	QTY
	233870	CYLINDER, HYD 5X30, 3000 PSI **(PRINCE)**	1
	240960	PACKING KIT, Ø5" BORE **(INCLUDES ITEMS 13-19)**	1
1	- - - - -	PISTON ROD	1
2	- - - - -	TUBE	1
3	- - - - -	TIEROD ASSEMBLY	4
4	240957	BUTT CLEVIS ASM	1
5	135912	BUSHING #210600358	4
6	- - - - -	PISTON	1
7	240958	GLAND, Ø5" BORE, Ø2" ROD	1
8	240959	ROD CLEVIS, Ø1-1/4" PINS	1
9	- - - - -	LOCKNUT	1
10	- - - - -	PORT PLUG **(FOR SHIPMENT)**	3
11	147755	CLEVIS PIN,ø1-1/4 HARD,PRINCE	2
12	147072	PIN, SPRING SLOTTED 5/16 X 2	4
13	- - - - -	O-RING	1
14	- - - - -	O-RING	2
15	- - - - -	BU-WASHER	2
16	- - - - -	CROWN SEAL	1
17	- - - - -	BEARING RING	1
18	- - - - -	U-CUP	1
19	- - - - -	WIPER	1

Hydraulic Cylinder, 6 x 30 - 233833

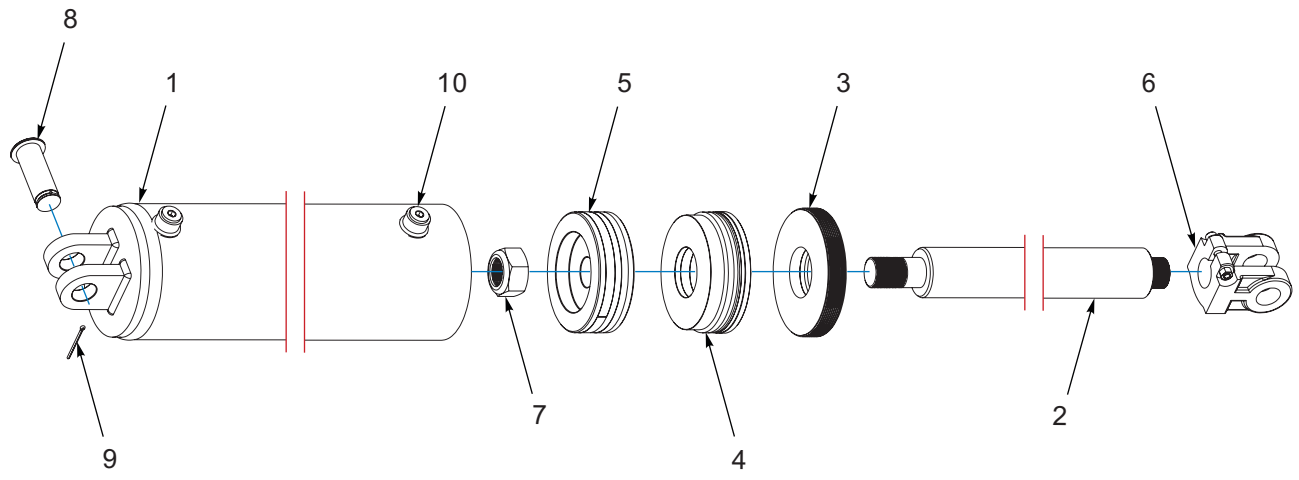

Figure 4-17: Hydraulic Cylinder, 6 x 30 - 233833

Hydraulic Cylinder, 6 x 30 - 233833

ITEM	PART NUMBER	DESCRIPTION	QTY
	233833	CYLINDER-HYD, 6 X 30, 3000 PSI **(MIDWAY / CARLSON)**	1
	253737	KIT, SEAL, CYL 233833 **(MIDWAY)**	1
1	- - - - -	6" BARREL ASSY	1
2	- - - - -	ROD 2-1/2" O.D. X 37-3/8" LG	1
3	- - - - -	RETAINER 6" OD X 2-1/2" ID X 1" LG	1
4	- - - - -	BEARING 6" OD X 2-1/2 ID X 2-1/8" LG	1
5	- - - - -	CT PISTON 6" OD X 1-1/2" ID X1-15/16' LG	1
6	- - - - -	MW CLEVIS 1-1/2"-12 X 1 1/4" PIN	1
7	- - - - -	1-1/2"-12 NYLOCK NUT	1
8	- - - - -	1-1/4" CLEVIS PIN	1
9	- - - - -	1/8" X 2" COTTER PIN	1
10	- - - - -	7/8" SAE HEX PLUG	2

Table provided for general use.

NOTES:

Shanks

Parabolic Shank, 1-1/4

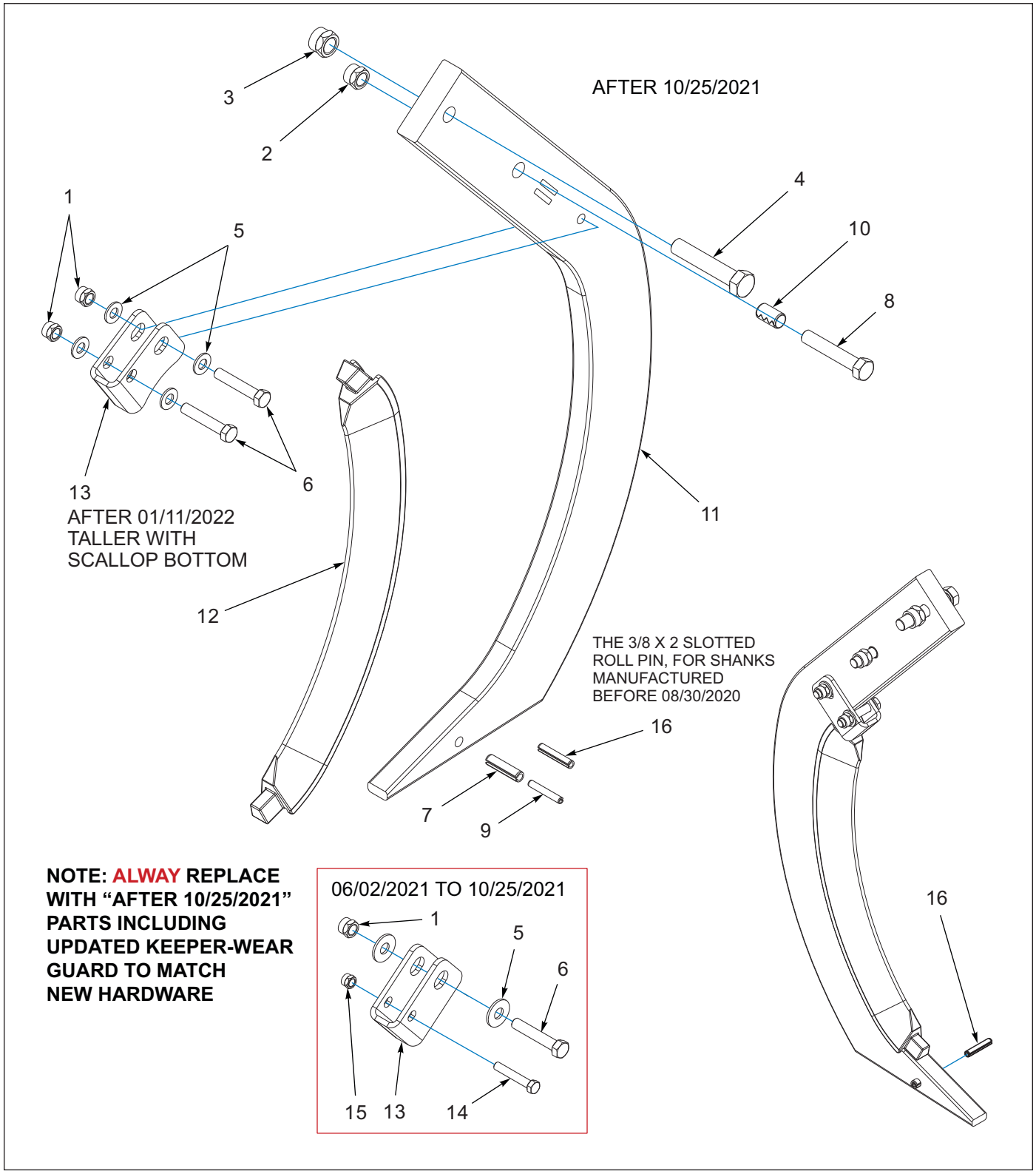

Figure 5-1: Parabolic Shank, 1-1/4

Parabolic Shank, 1-1/4

ITEM	PART NUMBER	DESCRIPTION	QTY.
	224746	SHANK, 1-1/4, PARABOLIC, ASM **(INCL. ITEMS 1, 5, 6, 7, 9, 11-17)**	1
1	1-512-010005-09	NUT,HEX,SLFLKG, 1/2-13 GRB	2
2	1-512-010005-13	NUT,HEX SLFLKG GRB 5/8-11 **(PART OF 218760 CLAMP ASM) (SEE PAGE 1-19)**	1
3	1-512-010005-15	NUT,HEX,SLFLKG GRB 3/4-10 **(PART OF 218760 CLAMP ASM) (SEE PAGE 1-19)**	1
4	1-654-010061-13	SCREW,HX CP 3/4-10UNCX4 GR5 **(PART OF 218760 CLAMP ASM) (SEE PAGE 1-19)**	1
5	1-861-010032-14	WASHER, FLAT 1/2" N ZP/CD **(AFTER 10/25/2021)**	4
5	1-861-010032-15	WASHER, FLAT 1/2 W ZP/CD **(BEFORE 10/25/2021)**	2
6	101510	SCREW HXCP1/2-13UNCX2-3/4 G5	2
7	127351	PIN, SPRING, SLOTTED 1/2X2	1
8	138567	SCREW,HX CP 5/8-11UNCX3-1/2G8 **(PART OF 218760 CLAMP ASM) (SEE PAGE 1-19)**	1
9	147072	PIN, SPRING SLOTTED 5/16 X 2	1
10	150244	BUSHING,CNX-5/8 X 3/4 X 1-1/4 **(PART OF 218760 CLAMP ASM) (SEE PAGE 1-19)**	1
11	169493	SHANK, 1-1/4 X 4, BOLT-IN,2410	1
12	224747	GUARD-WEAR, PARABOLIC	1
13	224748	KEEPER-WEAR GUARD,PARABOLIC **(ALWAYS REPLACE WITH UPDATED KEEPER WEAR GUARD TO MATCH NEW HARDWARE) (SEE PAGE 5-1)** **(**AFTER 01/11/2022, TALLER W/SCALLOP BOTTOM)**	1
14	1-654-010051-10	SCREW,HX CP3/8-16X2-1/4 GR5 **(06/02/2021 TO 10/25/2021)**	1
15	1-512-010005-05	NUT, HEX, SLFLKG GRB 3/8-16 **(06/02/2021 TO 10/25/2021)**	1
16	1-647-010004255	PIN, SPRING, SLOTTED 3/8X2 **(ADDED 10/05/2021)** **(TO BE USED W/SHANKS MANUFACTURED BEFORE 08/30/2020)**	1
17	227895	KIT-HARDWARE, SHANK **(NOT SHOWN)** **(INCL. ITEMS 1, 5, 6, 7, 9, 12, 13)**	1

Straight Leg Shank, 1-1/4

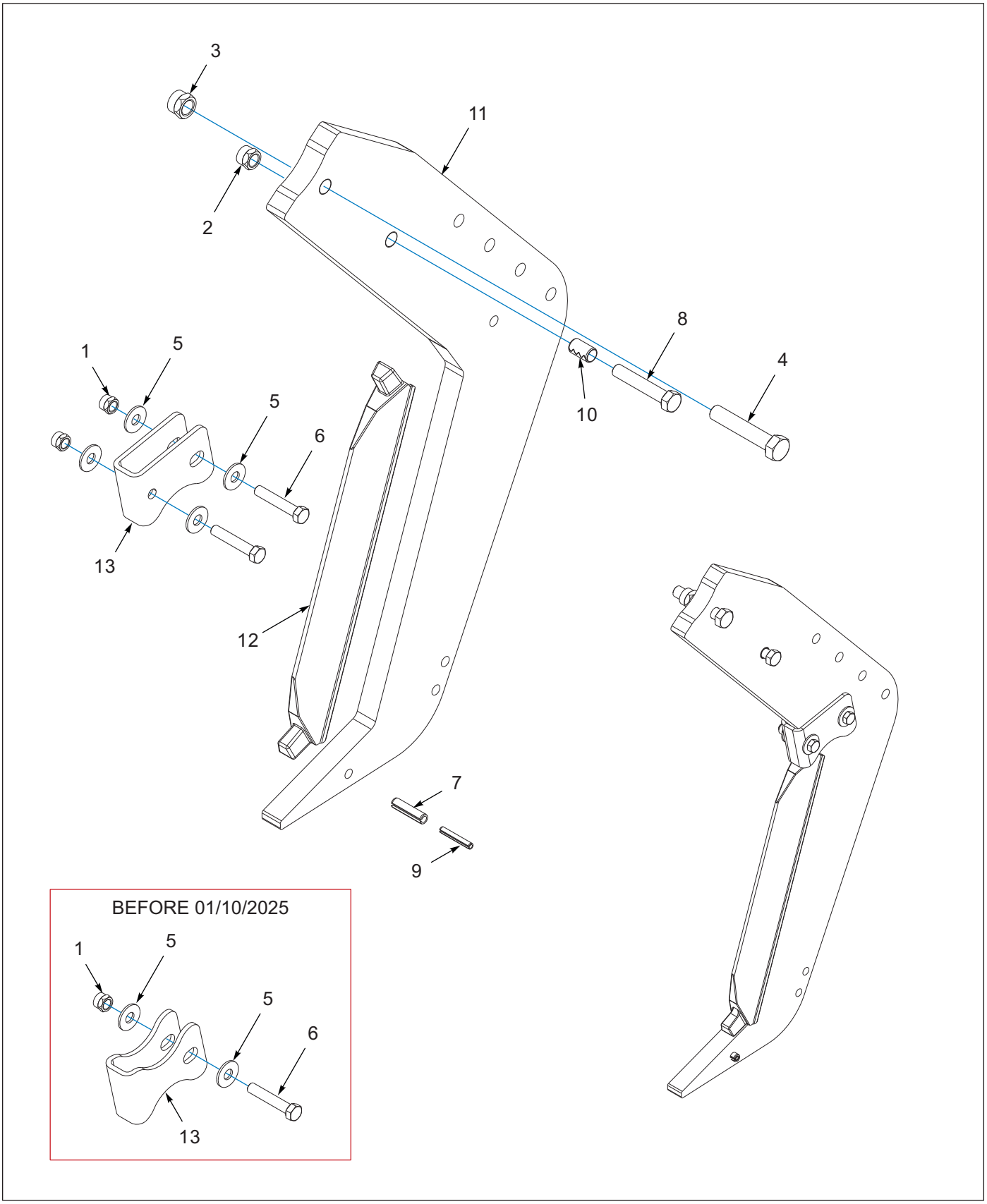

Figure 5-2: Straight Leg Shank, 1-1/4

Straight Leg Shank, 1-1/4

ITEM	PART NUMBER	DESCRIPTION	QTY.
	224744	SHANK, 1-1/4, STRAIGHT LEG, ASM **(INCL. ITEMS 1, 5, 6, 7, 9, 11-13)**	1
1	1-512-010005-09	NUT,HEX,SLFLKG, 1/2-13 GRB **(BEFORE 01/10/2025, QTY=1)**	2
2	1-512-010005-13	NUT,HEX SLFLKG GRB 5/8-11 **(PART OF 218760 CLAMP ASM) (SEE PAGE 1-19)**	1
3	1-512-010005-15	NUT,HEX,SLFLKG GRB 3/4-10 **(PART OF 218760 CLAMP ASM) (SEE PAGE 1-19)**	1
4	1-654-010061-13	SCREW,HX CP 3/4-10UNCX4 GR5 **(PART OF 218760 CLAMP ASM) (SEE PAGE 1-19)**	1
5	1-861-010032-15	WASHER, FLAT 1/2 W ZP/CD **(BEFORE 01/10/2025, QTY=2)**	4
6	101510	SCREW HXCP1/2-13UNCX2-3/4 G5 **(BEFORE 01/10/2025, QTY=1)**	2
7	127351	PIN, SPRING, SLOTTED 1/2X2	1
8	138567	SCREW,HX CP 5/8-11UNCX3-1/2G8 **(PART OF 218760 CLAMP ASM) (SEE PAGE 1-19)**	1
9	147072	PIN, SPRING SLOTTED 5/16 X 2	1
10	150244	BUSHING,CNX-5/8 X 3/4 X 1-1/4 **(PART OF 218760 CLAMP ASM) (SEE PAGE 1-19)**	1
11	224743	SHANK- 1-1/4 STRAIGHT LEG	1
12	224745	GUARD-WEAR, STRAIGHT LEG	1
13	224752	KEEPER-WEAR GUARD,STR LEG	1

Straight Leg Shank, 3/4 (AFTER 02/2026)

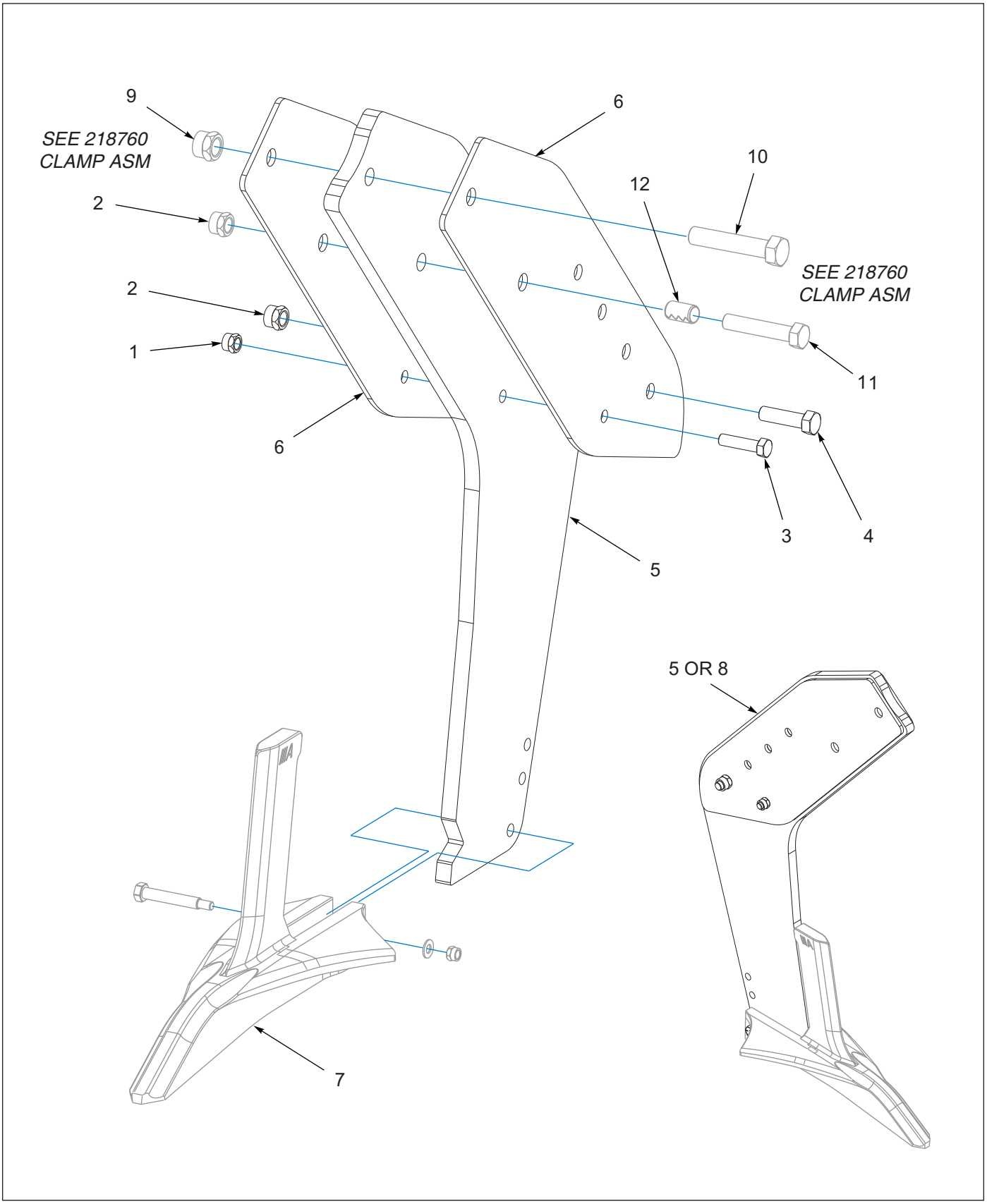

Figure 5-3: Straight Leg Shank, 3/4 (AFTER 02/2026)

Straight Leg Shank, 3/4 (AFTER 02/2026)

ITEM	PART NUMBER	DESCRIPTION	QTY.
	253740	SHANK-3/4, STRAIGHT LEG, ASM **(INCLUDES ITEMS 1 THRU 7)**	1
1	1-512-010005-09	NUT,HEX,SLFLKG, 1/2-13 GRB	1
2	1-512-010005-13	NUT,HEX SLFLKG GRB 5/8-11 **(PART OF 218760 CLAMP ASM) (SEE PAGE 1-19)**	1
3	1-654-010055-05	SCREW,HEX CAP,1/2-13UNCX2 GR5	1
4	1-654-010059-06	SCREW,HEX CAP 5/8-11X2-1/4 G5	1
5	253759	PLATE-SHANK, 3/4, NO TILL	1
6	253760	PLATE-GUSSET, SHANK	2
7	245220	POINT-NO TILL, SUPERRIP, 8IN **(SEE PAGE 6-2)**	1
8	242960	SHANK-LOW DIST, WELDMENT **(OPTIONAL WELDED SHANK) (NOT SHOWN)**	- -
9	1-512-010005-15	NUT,HEX,SLFLKG GRB 3/4-10 **(PART OF 218760 CLAMP ASM) (SEE PAGE 1-19)**	- -
10	1-654-010061-13	SCREW,HX CP 3/4-10UNCX4 GR5 **(PART OF 218760 CLAMP ASM) (SEE PAGE 1-19)**	- -
11	138567	SCREW,HX CP 5/8-11UNCX3-1/2G8 **(PART OF 218760 CLAMP ASM) (SEE PAGE 1-19)**	- -
12	150244	BUSHING,CNX-5/8 X 3/4 X 1-1/4 **(PART OF 218760 CLAMP ASM) (SEE PAGE 1-19)**	- -

Straight Leg Shank, 3/4 (BEFORE 02/2026)

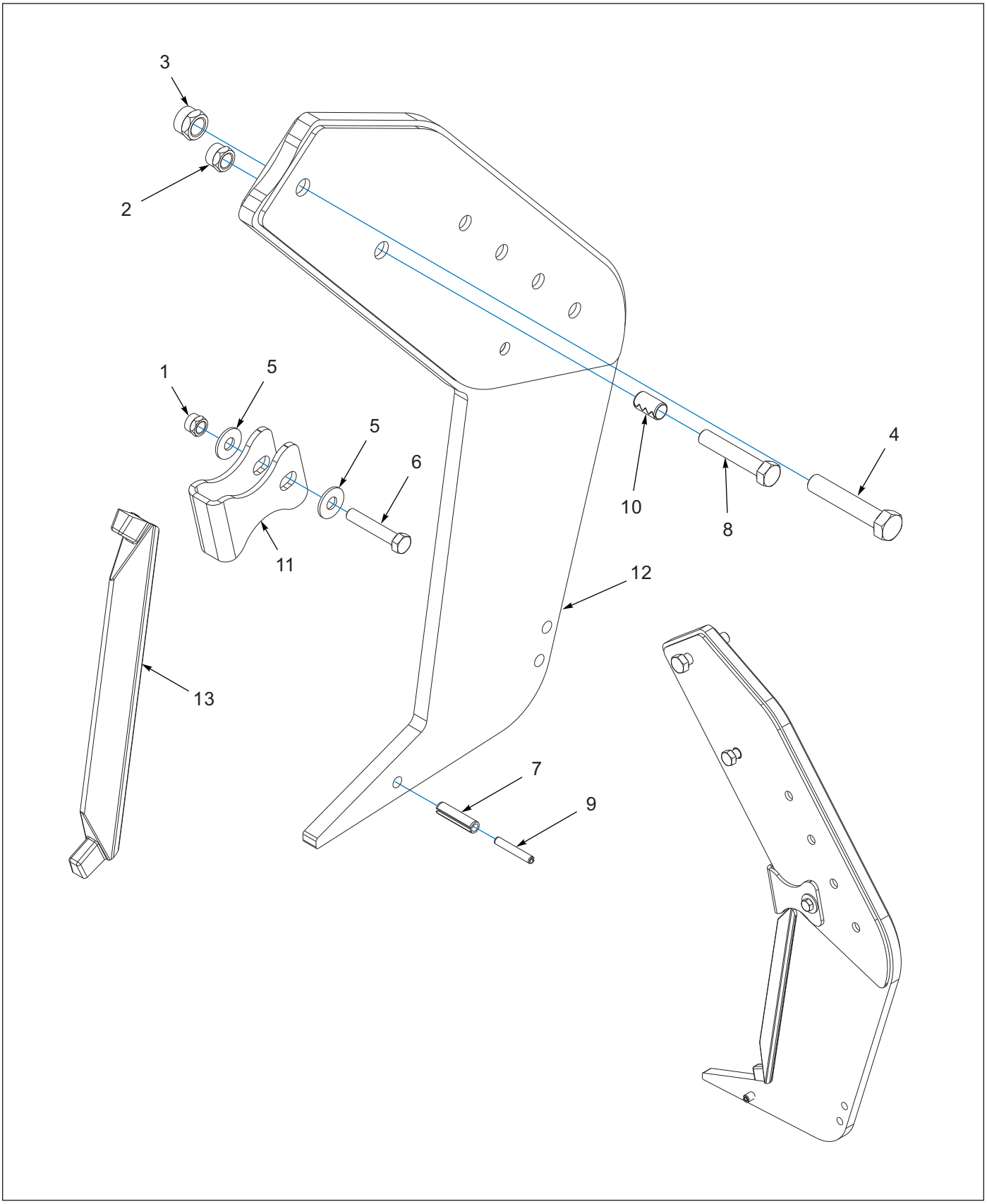

Figure 5-4: Straight Leg Shank, 3/4 (BEFORE 02/2026)

Straight Leg Shank, 3/4 (BEFORE 02/2026)

ITEM	PART NUMBER	DESCRIPTION	QTY.
	224768	SHANK, 3/4, STRAIGHT LEG, ASM **(INCL. ITEMS 1, 5, 6, 7, 9, 11-13)**	1
1	1-512-010005-09	NUT,HEX,SLFLKG, 1/2-13 GRB	1
2	1-512-010005-13	NUT,HEX SLFLKG GRB 5/8-11 **(PART OF 218760 CLAMP ASM) (SEE PAGE 1-19)**	1
3	1-512-010005-15	NUT,HEX,SLFLKG GRB 3/4-10 **(PART OF 218760 CLAMP ASM) (SEE PAGE 1-19)**	1
4	1-654-010061-13	SCREW,HX CP 3/4-10UNCX4 GR5 **(PART OF 218760 CLAMP ASM)(SEE PAGE 1-19)**	1
5	1-861-010032-15	WASHER, FLAT 1/2 W ZP/CD	2
6	101510	SCREW HXCP1/2-13UNCX2-3/4 G5	1
7	127351	PIN, SPRING, SLOTTED 1/2X2	1
8	138567	SCREW,HX CP 5/8-11UNCX3-1/2G8 **(PART OF 218760 CLAMP ASM) (SEE PAGE 1-19)**	1
9	147072	PIN, SPRING SLOTTED 5/16 X 2	1
10	150244	BUSHING,CNX-5/8 X 3/4 X 1-1/4 **(PART OF 218760 CLAMP ASM) (SEE PAGE 1-19)**	1
11	224752	KEEPER-WEAR GUARD,STR LEG	1
12	224763	SHANK-STRAIGHT LEG, 3/4 WLDMT	1
13	224767	GUARD-WEAR, STRAIGHT LEG, 3/4	1

Coverboard Kit

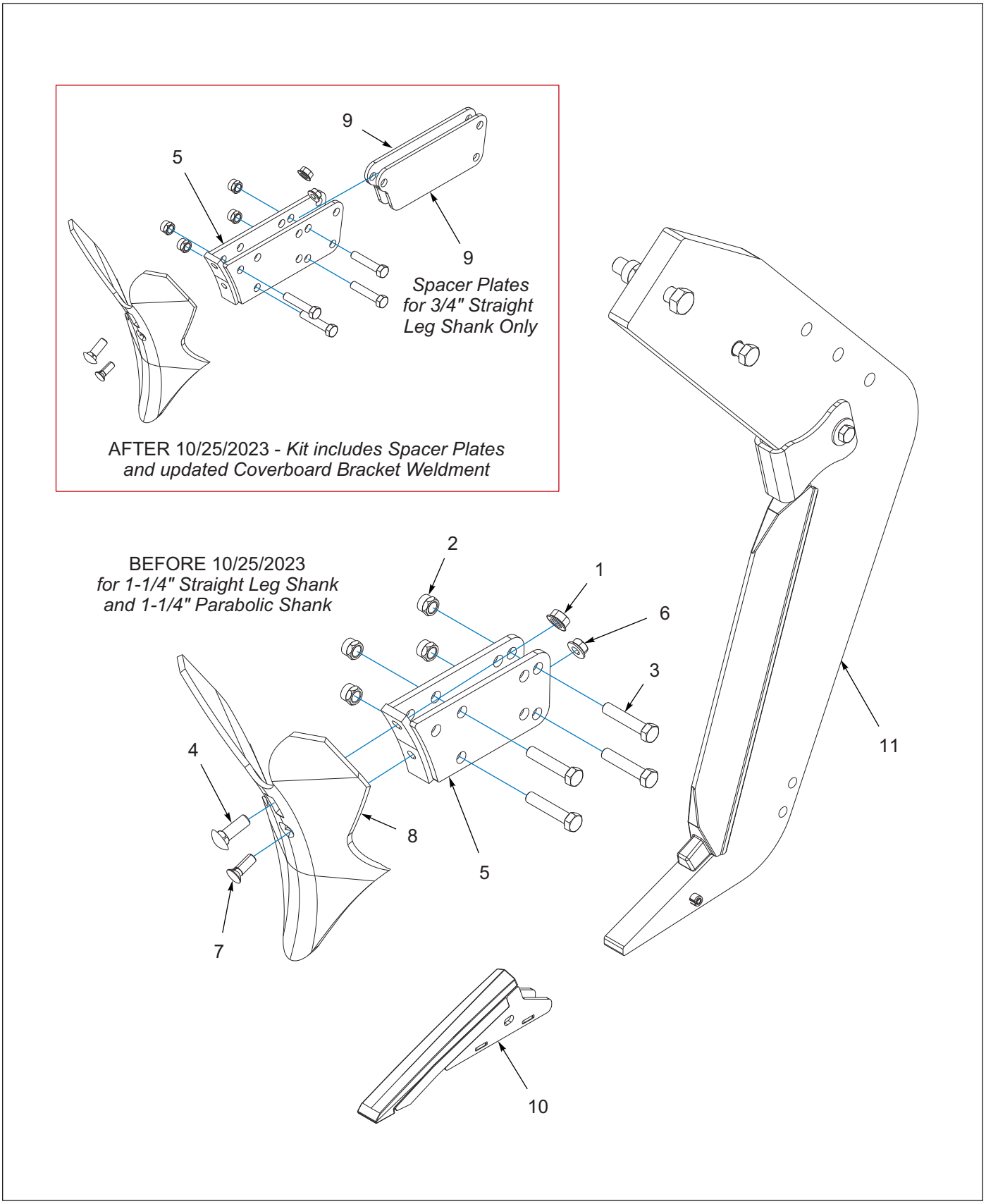

Figure 5-5: Coverboard Kit

Coverboard Kit

ITEM	PART NUMBER	DESCRIPTION	QTY.
	227299	KIT-COVER BOARD, 2512 **(AFTER 10/25/2023 - USED WITH 224744, 224746 AND 224768)**	1
1	1-510-010003-09	NUT,1/2-13 FLANGE HD,SERRATED	1
2	1-512-010005-09	NUT,HEX,SLFLKG, 1/2-13 GRB	4
3	1-654-010055-07	SCREW HX CP 1/2-13UNCX2-1/2	4
4	1-654-010070-03	SCREW RDHD SQNK1/2-13X1-1/2	1
5	214396	BRACKET-COVERBOARD WLDMT	1
6	4K551	SELF-LOCKING FLANGE NUT	1
7	5J425	BOLT PLOW 7/16-14 X 1-1/4	1
8	6K478	FURROWER FOR COVERBOARD	1
9	247319	PLATE-SPACER, BRACKET **(SPACER PLATES FOR 224768, 3/4" STRAIGHT LEG SHANK ONLY - ADDED TO KIT 10/25/2023)**	2
10	227247	1-1/4,PLN,CHRM CAP,2-1/2 **(SHOWN)** **(SEE PAGE 6-1 FOR AVAILABLE POINTS)**	- -
11	224744	SHANK, 1-1/4,STRAIGHT LEG, ASM **(SHOWN) (SEE PAGE 5-3)**	- -
11	224746	SHANK, 1-1/4, PARABOLIC, ASM **(NOT SHOWN) (SEE PAGE 5-1)**	- -
11	224768	SHANK, 3/4, STRAIGHT LEG, ASM **(NOT SHOWN) (SEE PAGE 5-5)**	- -

Points

Points for 1-1/4 Shank

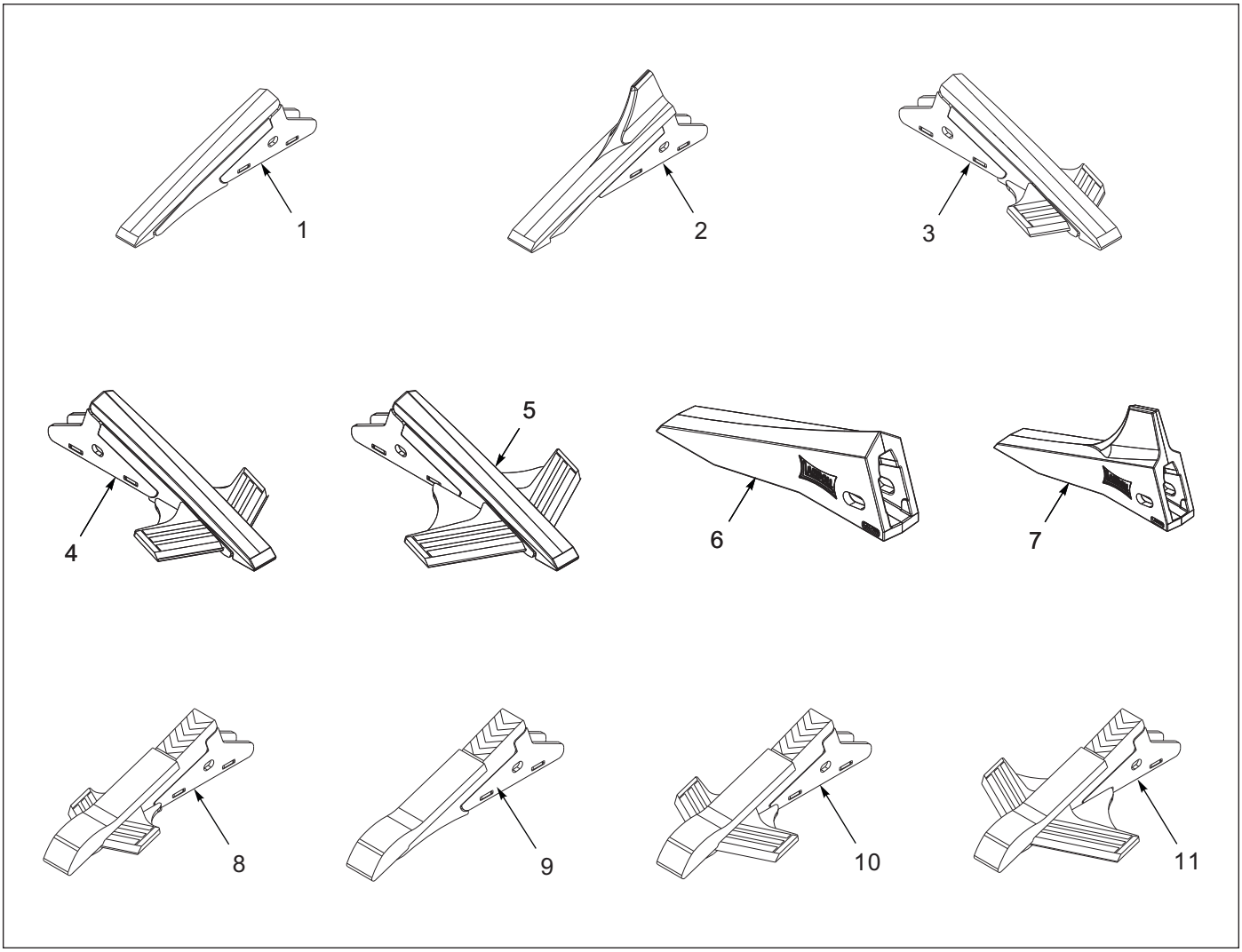

Figure 6-1: Points for 1-1/4 Shank

Points for 1-1/4 Shank

ITEM	PART NUMBER	DESCRIPTION	QTY.
1	227247	1-1/4,PLN,CHRM CAP,2-1/2	- -
2	227271	1-1/4,FIN CHRM CAP,2-1/2,WLDMT	- -
3	227207	1-1/4,WNGD,7,CHRM CAP,2-1/2	- -
4	227210	1-1/4,WNGD,10,CHRM CAP,2-1/2	- -
5	227198	1-1/4,WNGD,WIDE,CHRM CAP,2-1/2	- -
6	227189	1-1/4,PLN,CADI,2-1/2	- -
7	227191	1-1/4,CADI,FIN,2-1/2	- -
8	227265	1-1/4, WINGD,7,CST STL CAP	- -
9	227267	1-1/4, PLN,2-1/2 CST STL CAP	- -
10	227272	1-1/4,WNGD,10,CST STL CAP	- -
11	227273	1-1/4,WINGD,WIDE,CST STL CAP	- -

Points for 3/4 Shank

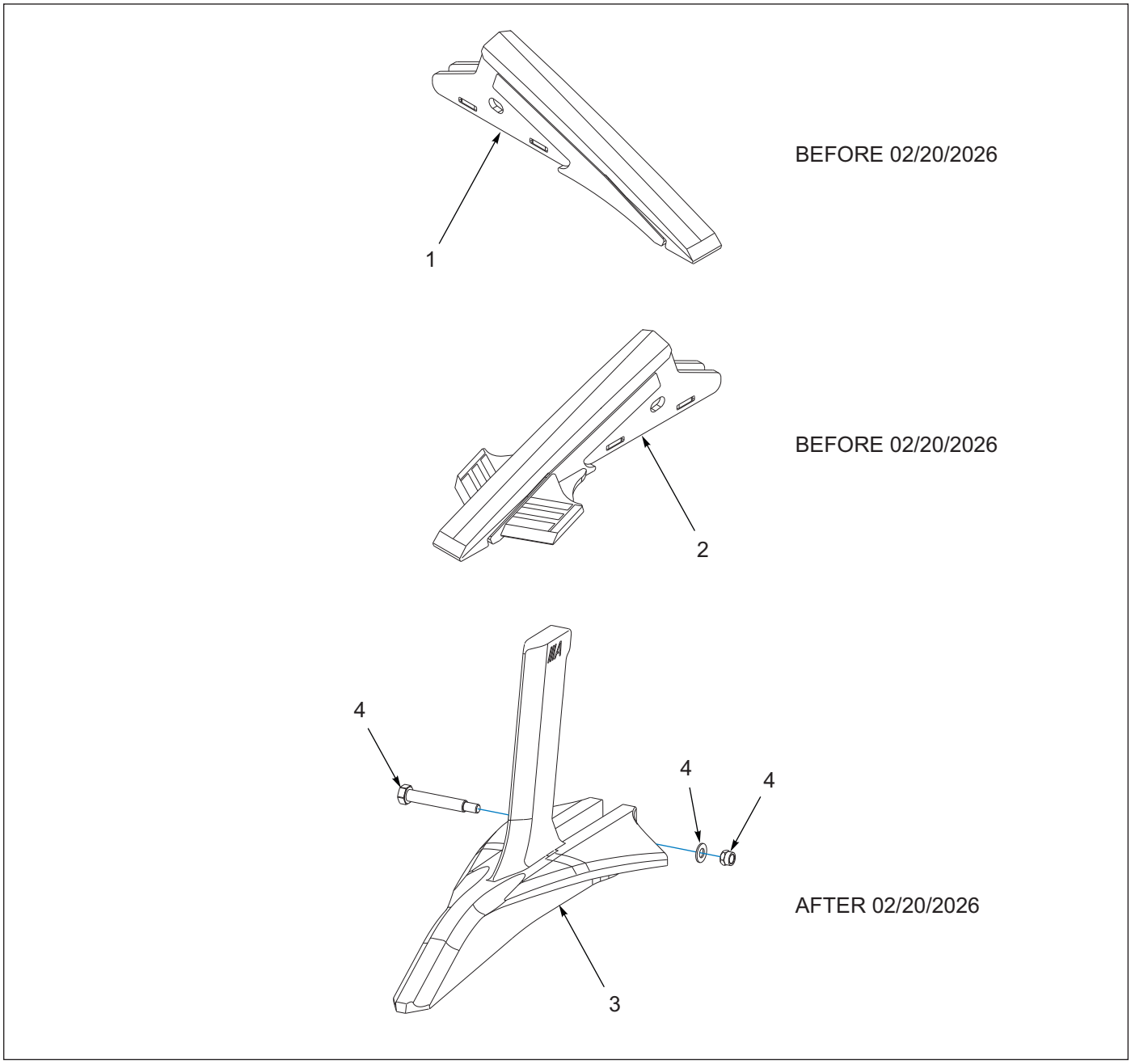

Figure 6-2: Points 3/4 Shank

Points for 3/4 Shank

ITEM	PART NUMBER	DESCRIPTION	QTY.
1	227221	3/4,PLN,CHRM CAP, 2 **(BEFORE 02/2026)**	- -
2	227245	3/4,WNGD, 7,CHARM CAP WLDMT **(BEFORE 02/2026)**	- -
3	245220	POINT-NO TILL, SUPERRIP, 8IN **(AFTER 02/2026)** **(INCLUDES HARDWARE, ITEM 4)**	- -
4	253742	KIT-BOLT,1/2 X 3/8-16 X 3-3/8 **(AFTER 02/2026)** **(SERVICE PART NUMBER FOR ITEM 3, HARDWARE ONLY)** **(KIT INCLUDES BOLT, WASHER AND LOCKNUT, INDIVIDUAL PARTS NOT SOLD SEPARATELY)**	- -

Finishing Options

Closing Platform (AFTER 04/2024)

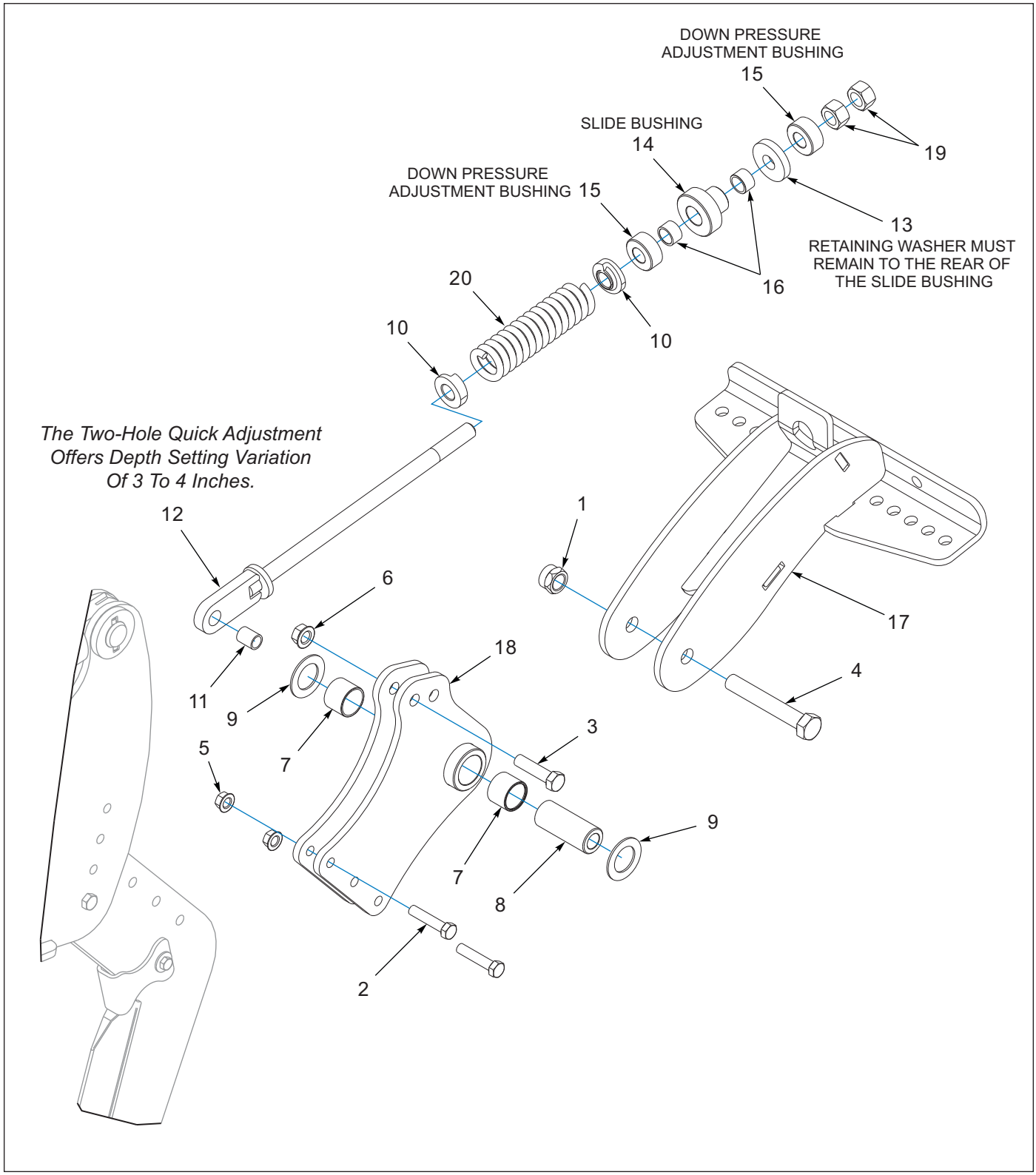

Figure 7-1: Closing Platform (AFTER 04/2024) (1 of 2)

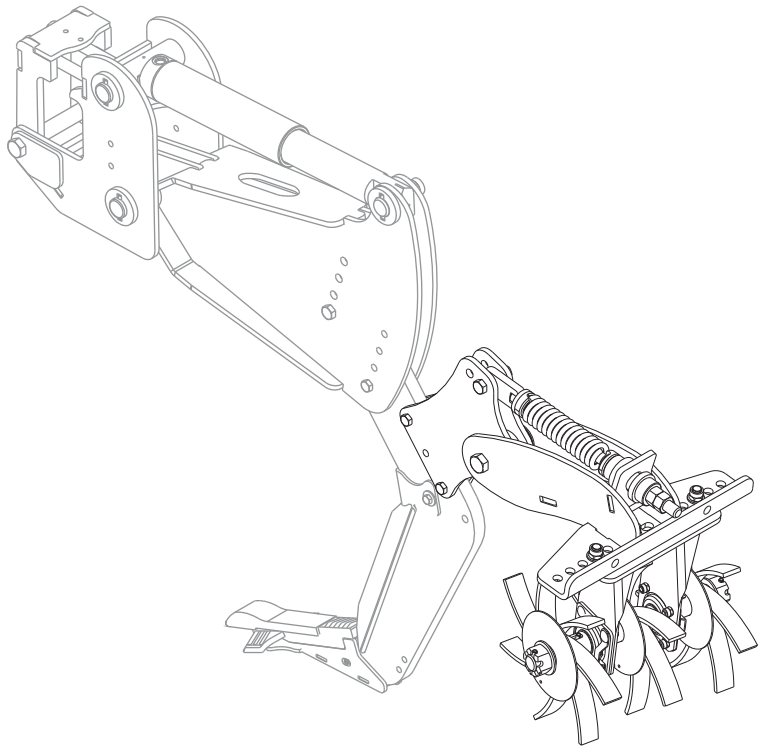

BACK VIEW

Figure 7-2: Closing Platform (AFTER 04/2024) (2 of 2)

Closing Platform (AFTER 04/2024)

ITEM	PART NUMBER	DESCRIPTION	QTY.
	227150	PLATFORM-CLOSING, 2512, ASM **(SHOWN W/ CLOSER WHEEL)**	1
1	1-512-010005-19	NUT 1-8 HEX SLF-LOCKING GRB	1
2	138567	SCREW,HX CP 5/8-11UNCX3-1/2G8	2
3	1-654-010061-09	SCREW HX CP 3/4-10UNCX3 GR5	1
4	1-654-010125-18	SCREW HEX CAP,1-8UNCX6-1/2GR8	1
5	100827	NUT,FLG HD,SERRATED,5/8-11	2
6	103841	NUT,FLG,LNK,SERRATED 3/4-10UNC	1
7	210879	BEARING-HEF, 2.004X1.76X1-1/2	2
8	227126	BUSHING,1.75 X 1.03 X 4.313	1
9	227132	WASHER-2-7/8X1.78 ID,1/8 UHMW	2
10	227147	PLUG-SPRING, 1-1/16	2
11	227148	TUBE, 1.0 X .782 X 1.250	1
12	227917	BOLT-TENSIONER, WLDMT	1
13	227919	WASHER, 1.03 X 2.75 X 0.5	1
14	227921	BUSHING-SLIDE, BASE	1
15	227922	BUSHING, 2-1/4 X 1-1/32 X 1	2
16	227925	BUSHING, IGUS, MSM-2734-20	2
17	239291	PLATFORM-MOUNT,CLOSER,WELDMENT	1
18	239293	PIVOT-SPRING MOUNT, WELDMENT	1
19	61D16ER	NUT, HEX 1-8UNC GR5 ZP	2
20	6J460	COMPRESSION SPRING	1

Closing Platform (02/2022 TO 04/2024)

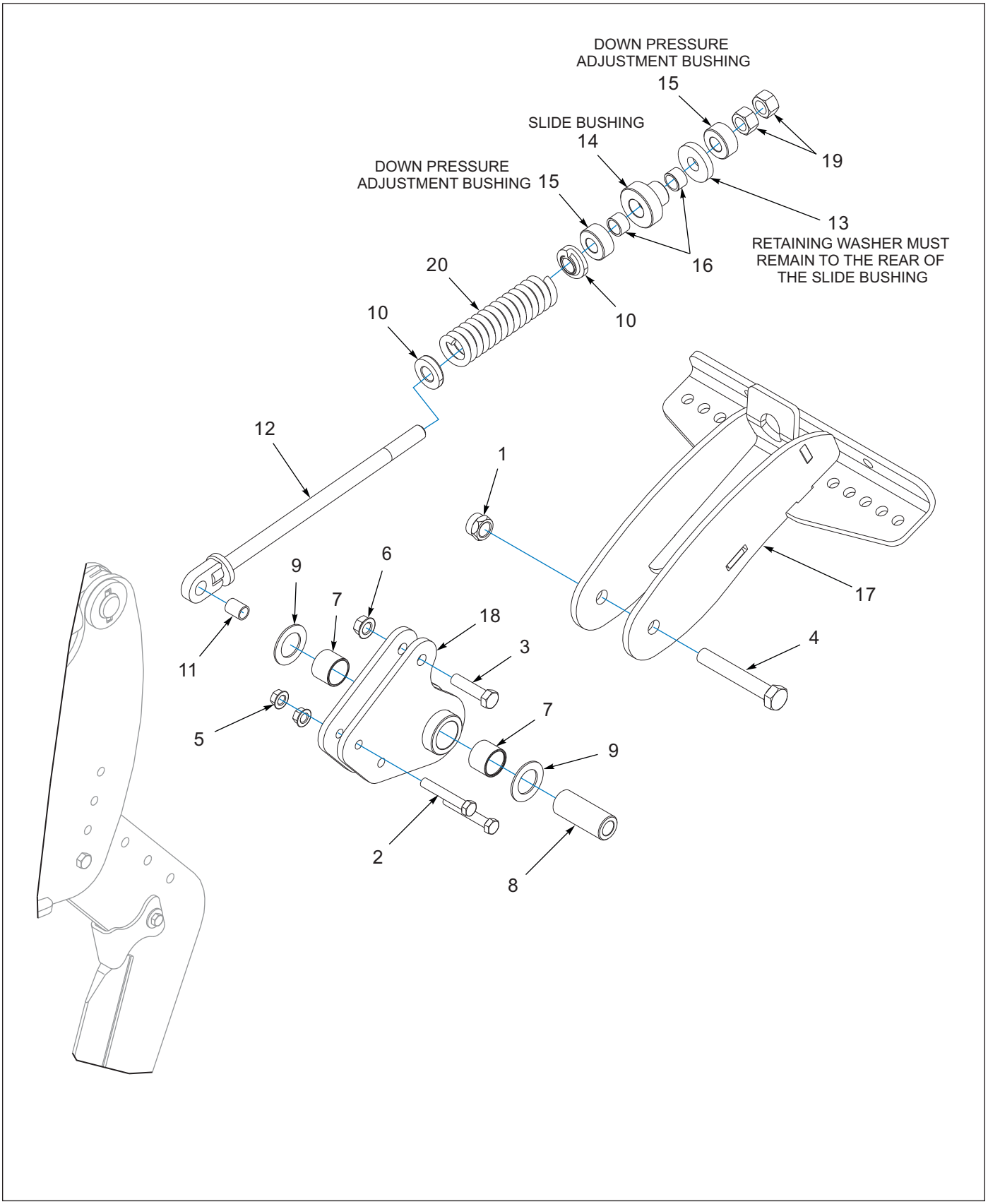

Figure 7-3: Closing Platform (02/2022 TO 04/2024) (1 of 2)

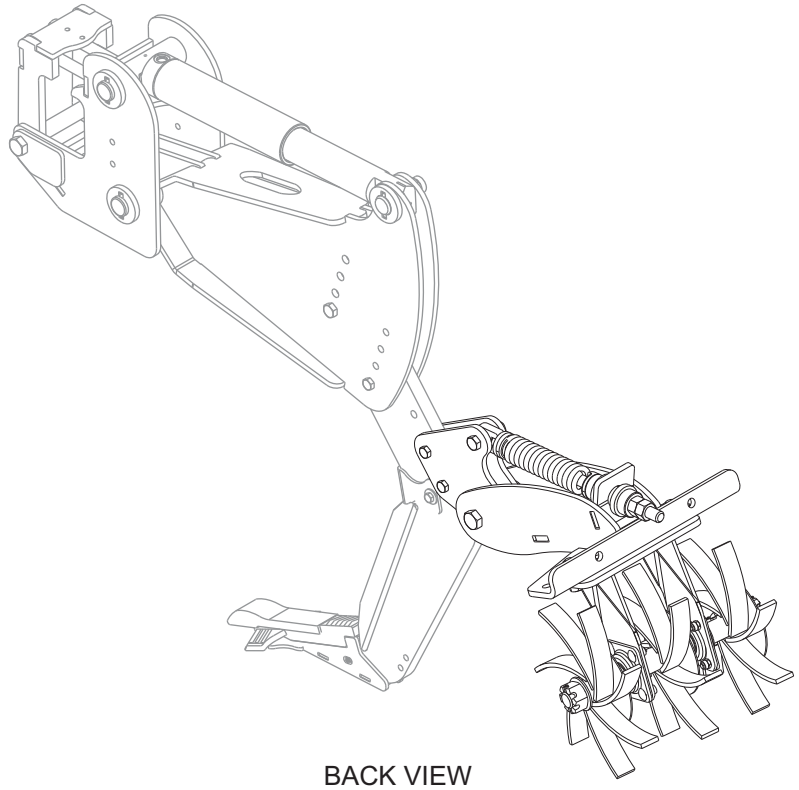

Figure 7-4: Closing Platform (02/2022 TO 04/2024) (2 of 2)

Closing Platform (02/2022 TO 04/2024)

ITEM	PART NUMBER	DESCRIPTION	QTY.
	227150	PLATFORM-CLOSING, 2512, ASM **(SHOWN W/ CLOSER WHEEL)**	1
1	1-512-010005-19	NUT 1-8 HEX SLF-LOCKING GRB	1
2	172829	SCREW HX CP 5/8-11X4 GR8	2
3	1-654-010061-09	SCREW HX CP 3/4-10UNCX3 GR5	1
4	1-654-010125-18	SCREW HEX CAP,1-8UNCX6-1/2GR8	1
5	100827	NUT,FLG HD,SERRATED,5/8-11	2
6	103841	NUT,FLG,LNK,SERRATED 3/4-10UNC	1
7	210879	BEARING-HEF, 2.004X1.76X1-1/2	2
8	227126	BUSHING,1.75 X 1.03 X 4.313	1
9	227132	WASHER-2-7/8X1.78 ID,1/8 UHMW	2
10	227147	PLUG-SPRING, 1-1/16	2
11	227148	TUBE, 1.0 X .782 X 1.250	1
12	227917	BOLT-TENSIONER, WLDMT	1
13	227919	WASHER, 1.03 X 2.75 X 0.5	1
14	227921	BUSHING-SLIDE, BASE	1
15	227922	BUSHING, 2-1/4 X 1-1/32 X 1	2
16	227925	BUSHING, IGUS, MSM-2734-20	2
17	239291	PLATFORM-MOUNT,CLOSER,WELDMENT	1
18	239293	PIVOT-SPRING MOUNT, WELDMENT	1
19	61D16ER	NUT, HEX 1-8UNC GR5 ZP	2
20	6J460	COMPRESSION SPRING	1

Closing Platform (BEFORE 02/2022)

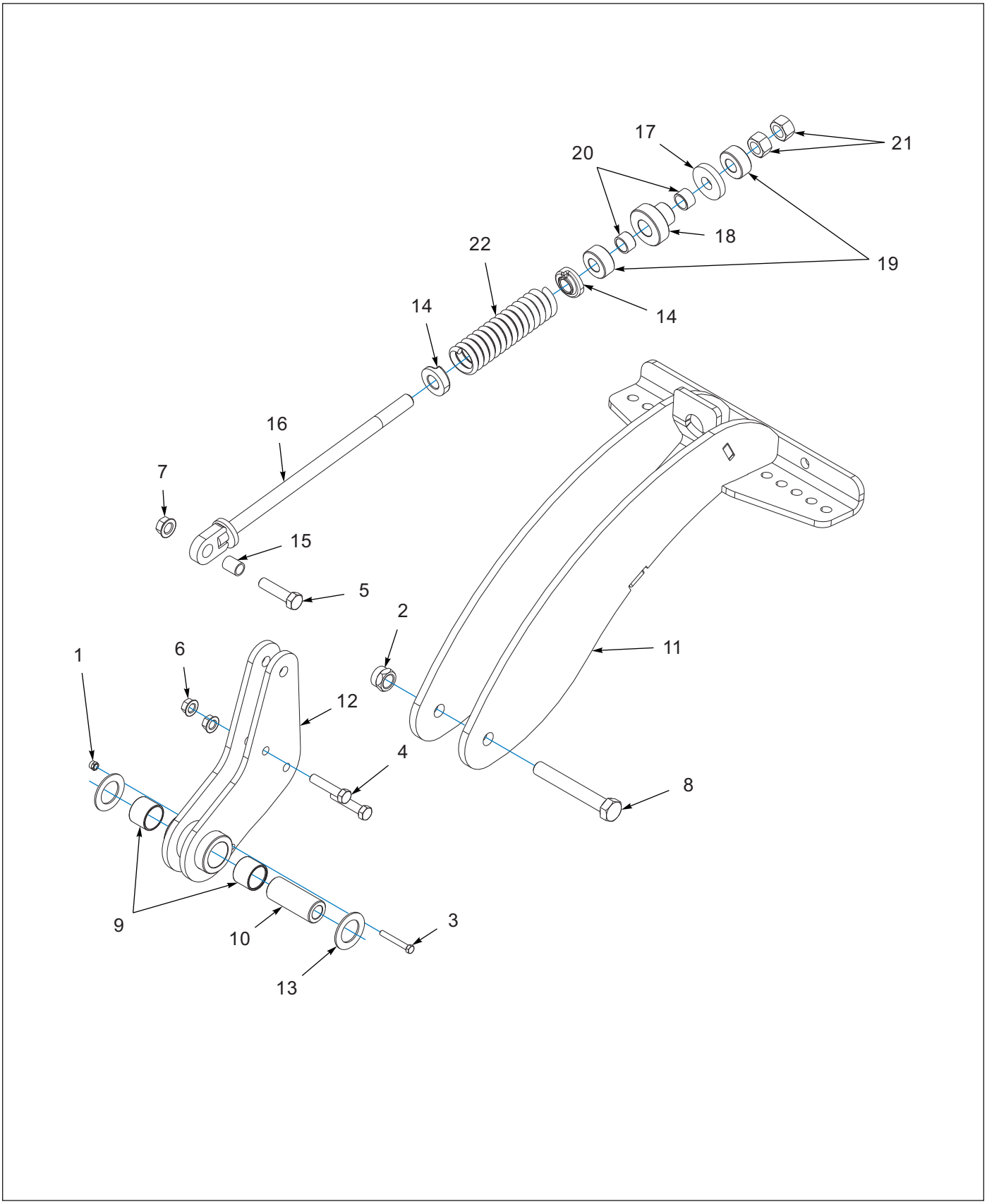

Figure 7-5: Closing Platform (BEFORE 02/2022) (1 of 2)

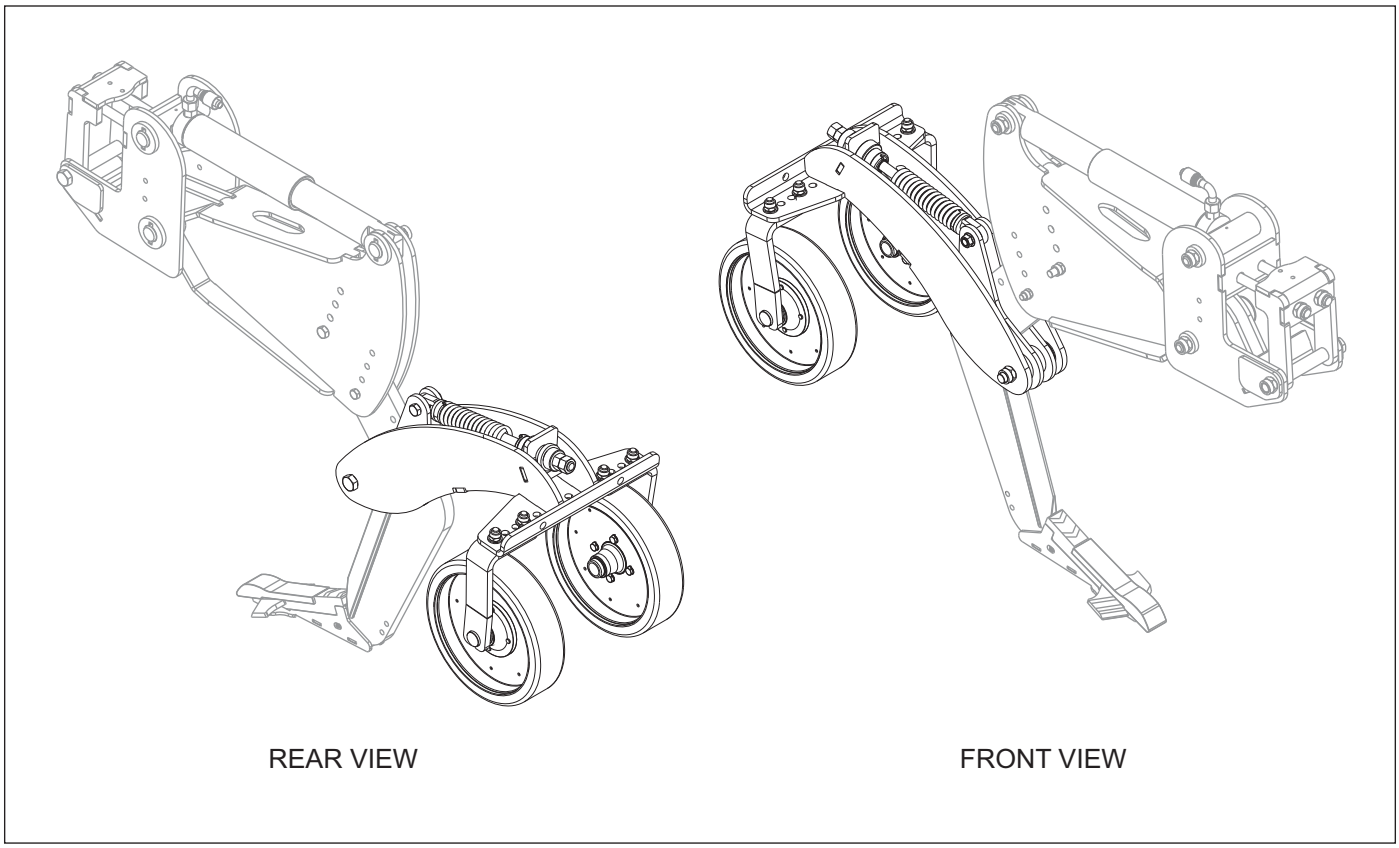

Figure 7-6: Closing Platform (BEFORE 02/2022) (2 of 2)

Closing Platform (BEFORE 02/2022)

ITEM	PART NUMBER	DESCRIPTION	QTY.
	227150	PLATFORM-CLOSING, 2512, ASM **(SHOWN W/ CLOSER WHEEL)**	1
1	1-512-010005-05	NUT, HEX, SLFLKG GRB 3/8-16	1
2	1-512-010005-19	NUT 1-8 HEX SLF-LOCKING GRB	1
3	1-654-010051-12	SCREW,HEX CAP,3/8-16UNCX2-3/4	1
4	1-654-010059-09	SCREW 5/8-11UNCX3 HX CP GR5	2
5	1-654-010061-09	SCREW HX CP 3/4-10UNCX3 GR5	1
6	100827	NUT,FLG HD,SERRATED,5/8-11	2
7	103841	NUT,FLG,LNK,SERRATED 3/4-10UNC	1
8	122767	SCREW,HEX CAP 1-8UNCX7 GR8	1
9	210879	BEARING-HEF, 2.004X1.76X1-1/2	2
10	227126	BUSHING,1.75 X 1.03 X 4.313	1
11	227127	FRAME-WHEEL MOUNT, WLDMT	1
12	227129	PIVOT-CLOSER MOUNT, WLDMT	1
13	227132	WASHER-2-7/8X1.78 ID,1/8 UHMW	2
14	227147	PLUG-SPRING, 1-1/16	2
15	227148	TUBE, 1.0 X .782 X 1.250	1
16	227917	BOLT-TENSIONER, WLDMT	1
17	227919	WASHER, 1.03 X 2.75 X 0.5	1
18	227921	BUSHING-SLIDE, BASE	1
19	227922	BUSHING, 2-1/4 X 1-1/32 X 1	2
20	227925	BUSHING, IGUS, MSM-2734-20	2
21	61D16ER	NUT, HEX 1-8UNC GR5 ZP	2
22	6J460	COMPRESSION SPRING	1

Closer Wheel

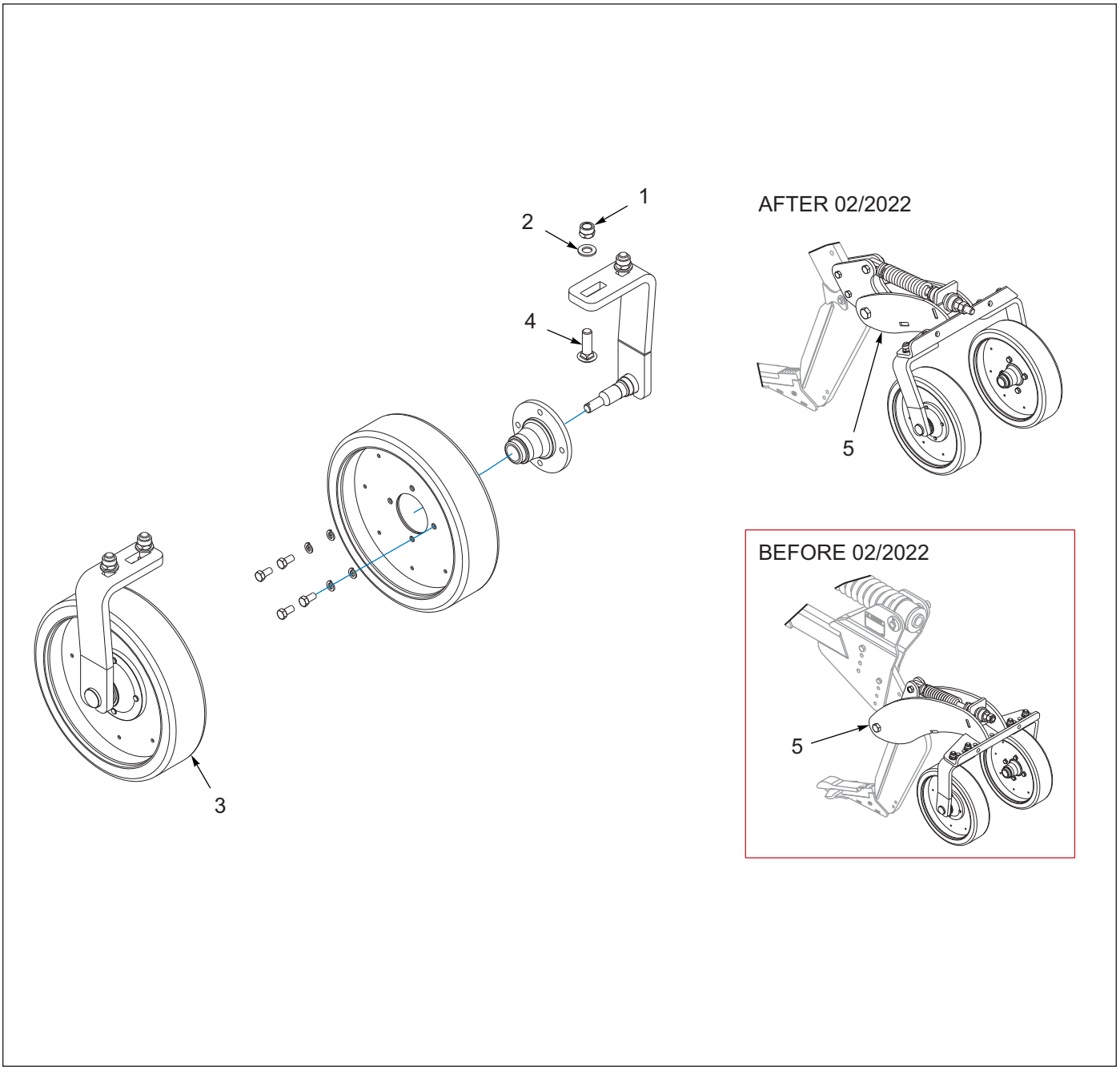

Figure 7-7: Closer Wheel

Closer Wheel

ITEM	PART NUMBER	DESCRIPTION	QTY.
	227228	CLOSER-WHEEL, RIPPER, ASSY	1
1	1-512-010005-15	NUT,HEX,SLFLKG GRB 3/4-10	4
2	1-861-010032-20	WASHER, FLAT,3/4 N ZP/CD	4
3	182257	WHEEL-CLOSING ASSEMBLY	2
4	3/4-10X2-1/2CB	SCREW,RDH SQNK 3/4-10X2-1/2	4
5	227150	PLATFORM-CLOSING, 2512, ASM **(SEE PAGE 7-1)** **(ALWAYS REPLACE W/ "AFTER 02/2022" CLOSING PLATFORM)**	1

Flat Bar Basket - 20"

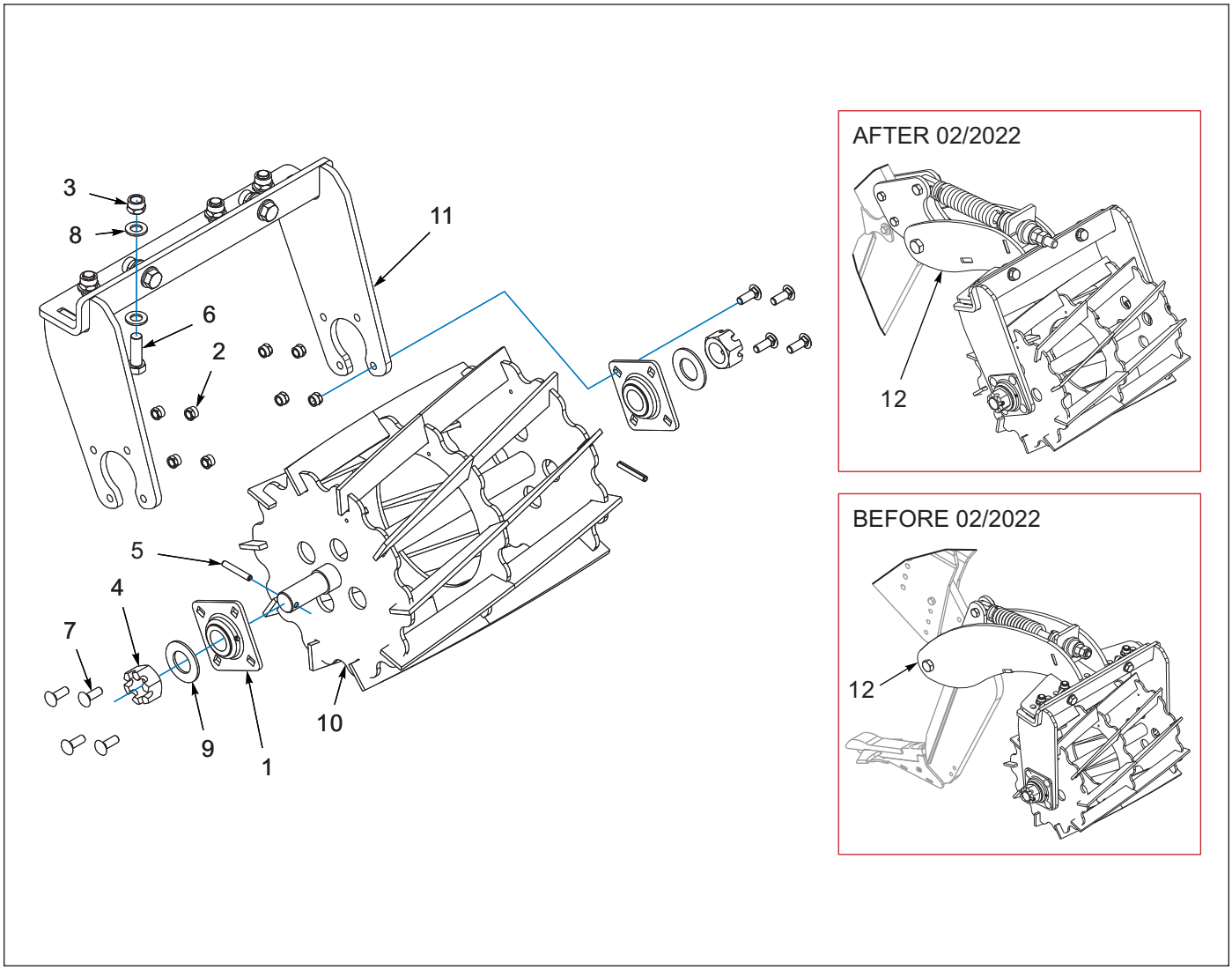

Figure 7-8: Flat Bar Basket - 20"

Flat Bar Basket - 20"

ITEM	PART NUMBER	DESCRIPTION	QTY.
	227232	BASKET-FLAT BAR, 20 INCH, ASSY	1
1	1-065-010011	BEARING FLANGED 1-1/2ID	2
2	1-512-010005-09	NUT,HEX,SLFLKG, 1/2-13 GRB	8
3	1-512-010005-15	NUT,HEX,SLFLKG GRB 3/4-10	6
4	1-516-010001-27	NUT,HX SLOT 1-1/2-6 ZP	2
5	1-647-010004240	PIN,SPRING,SLOTTED 5/16X2-1/2	2
6	1-654-010061-06	SCREW,HXCP,3/4-10UNCX2-1/4GR5	6
7	1-654-010070-03	SCREW RDHD SQNK1/2-13X1-1/2	8
8	1-861-010032-20	WASHER, FLAT,3/4 N ZP/CD	12
9	1-861-010032-32	WASHER FLAT ZP/CD 1-1/2	2
10	227225	REEL-FLAT BAR, WLDMT	1
11	227231	FRAME-MOUNT,REEL, WLDMT	1
12	227150	PLATFORM-CLOSING, 2512, ASM **(SEE PAGE 7-1)** **(ALWAYS REPLACE W/ "AFTER 02/2022" CLOSING PLATFORM)**	1

Closer Disc

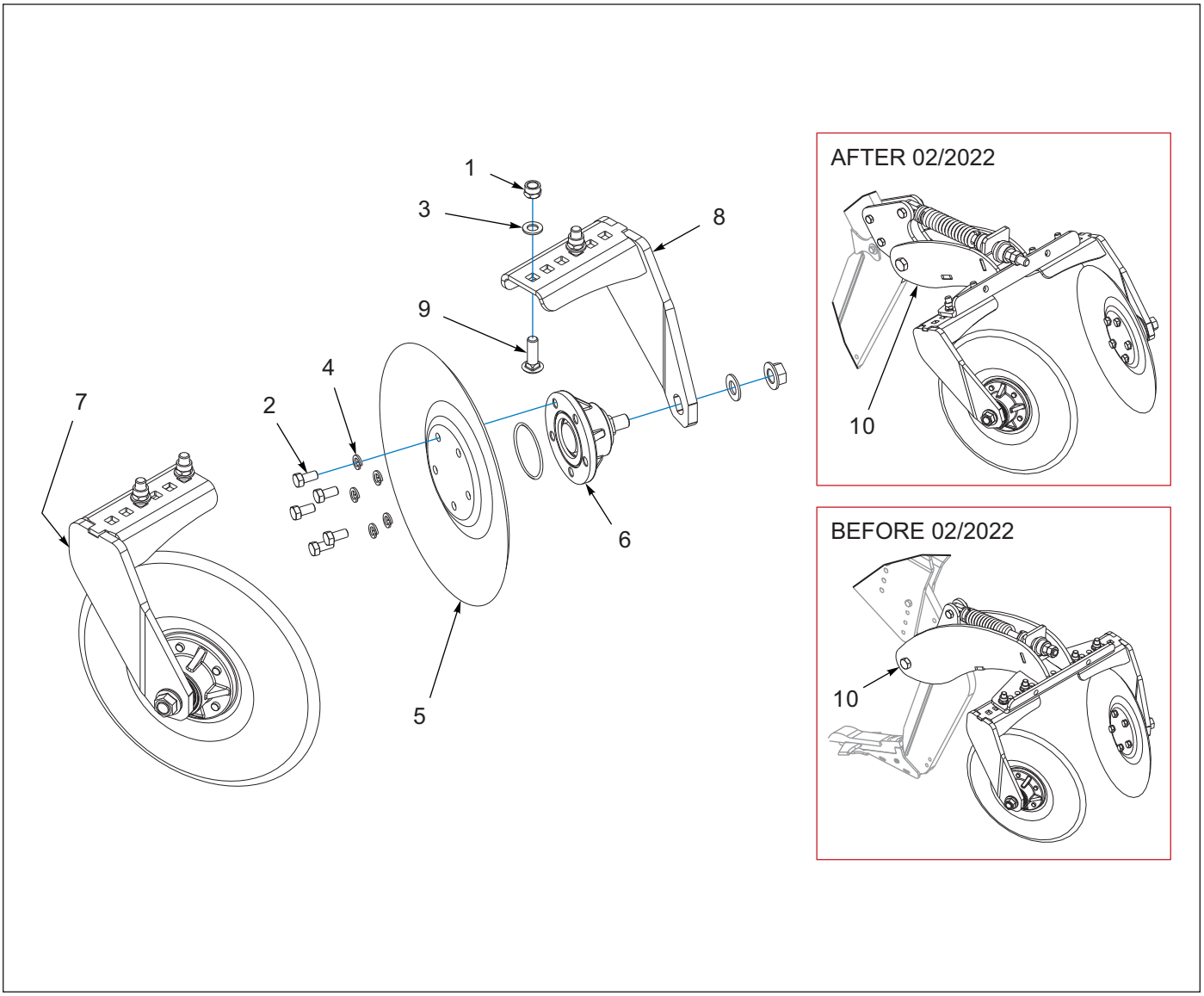

Figure 7-9: Closer Disc

Closer Disc

ITEM	PART NUMBER	DESCRIPTION	QTY.
	227236	CLOSER-DISC, RIPPER, ASSY	1
1	1-512-010005-15	NUT,HEX,SLFLKG GRB 3/4-10	4
2	1-654-010059-02	SCREW,HEX CAP,5/8-11X1-1/4GR5	10
3	1-861-010032-20	WASHER, FLAT,3/4 N ZP/CD	4
4	1-861-010034-15	WASHER,LKG,HLCL SPR,5/8	10
5	201244	DISC-BLADE, 20 INCH, SMOOTH	2
6	210880	KIT-HSL DISC HUB	2
7	227170	SHANK-LH, WLDMT	1
8	227173	SHANK-RH,WLDMT	1
9	3/4-10X2-1/2CB	SCREW,RDH SQNK 3/4-10X2-1/2	4
10	227150	PLATFORM-CLOSING, 2512, ASM **(SEE PAGE 7-1)**	1
		(ALWAYS REPLACE W/ "AFTER 02/2022" CLOSING PLATFORM)	

Crumbler Reel

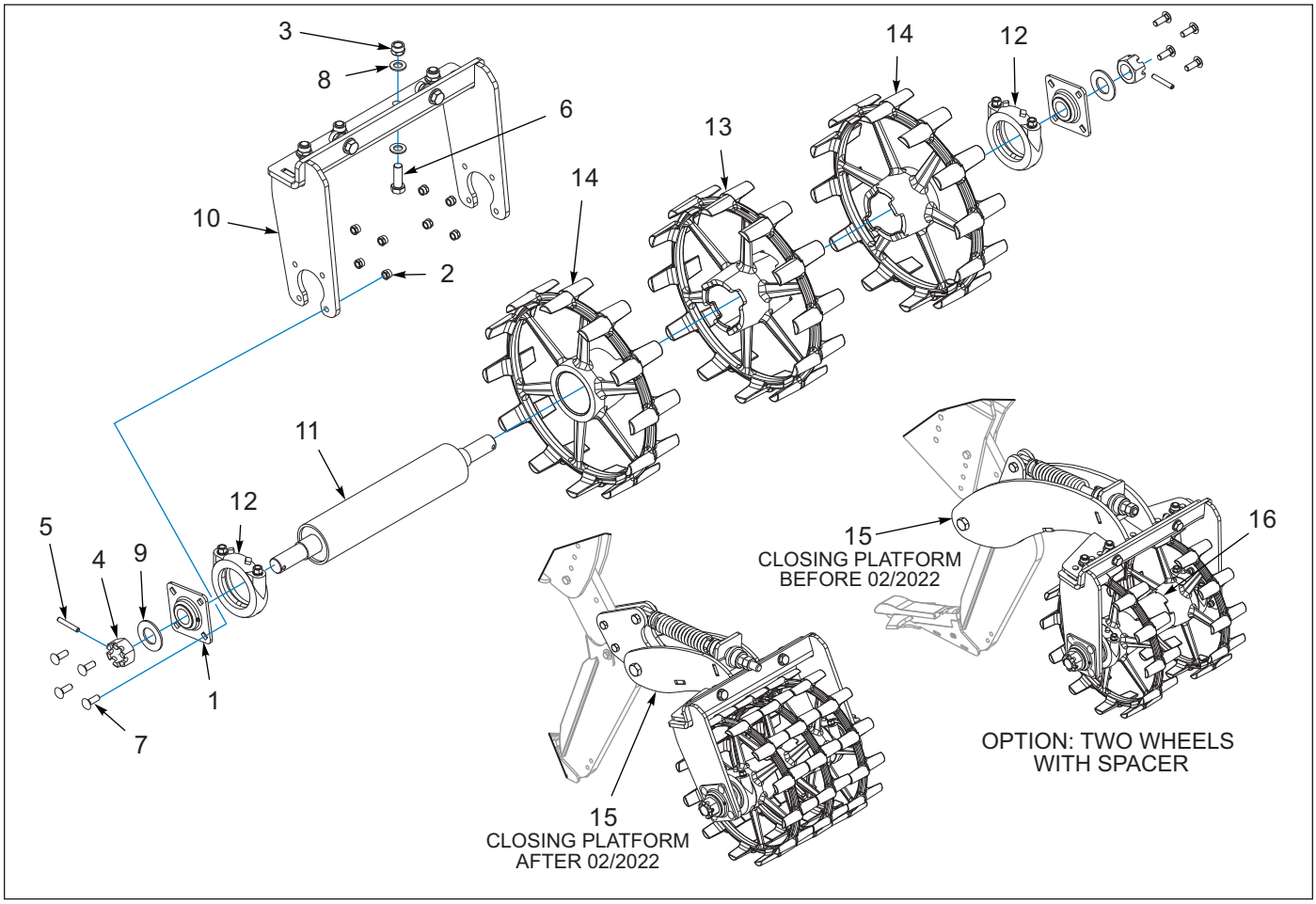

Figure 7-10: Crumbler Reel

Crumbler Reel

ITEM	PART NUMBER	DESCRIPTION	QTY.
	227237	REEL-CRUMBLER, ASSY	1
1	1-065-010011	BEARING FLANGED 1-1/2ID	2
2	1-512-010005-09	NUT,HEX,SLFLKG, 1/2-13 GRB	8
3	1-512-010005-15	NUT,HEX,SLFLKG GRB 3/4-10	6
4	1-516-010001-27	NUT,HX, SLOT 1-1/2-6 ZP	2
5	1-647-010004240	PIN,SPRING,SLOTTED 5/16X2-1/2	2
6	1-654-010061-06	SCREW,HXCP,3/4-10UNCX2-1/4GR5	6
7	1-654-010070-03	SCREW RDHD SQNK1/2-13X1-1/2	8
8	1-861-010032-20	WASHER, FLAT,3/4 N ZP/CD	12
9	1-861-010032-32	WASHER FLAT ZP/CD 1-1/2	2
10	227231	FRAME-MOUNT, REEL, WLDMT	1
11	227235	AXLE-PACKER, WLDMT	1
12	5J375	AXLE CLAMP ASSY	2
13	6K351	OPTIMIZER WHEEL (7006286) 4"	1
14	6K352	OPTIMIZER END WHEEL (7006287)	2
15	227150	PLATFORM-CLOSING, 2512, ASM **(SEE PAGE 7-1)** **(ALWAYS REPLACE W/ "AFTER 02/2022" CLOSING PLATFORM)**	1
16	230839	TUBE-SPACER, CRUMBLER	1

Packer Reel

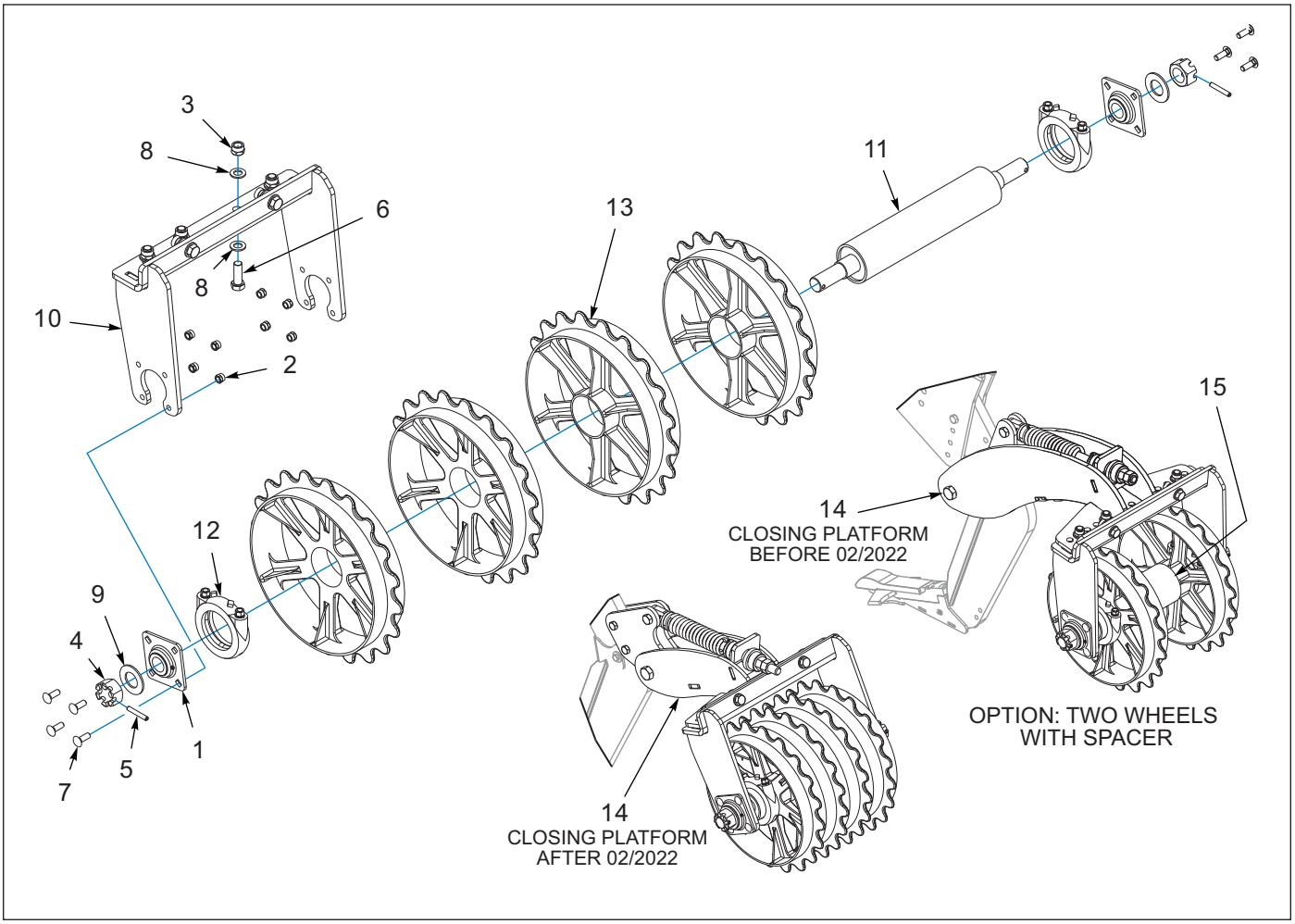

Figure 7-11: Packer Reel

Packer Reel

ITEM	PART NUMBER	DESCRIPTION	QTY.
	227242	REEL-PACKER, ASSY	1
1	1-065-010011	BEARING FLANGED 1-1/2ID	2
2	1-512-010005-09	NUT,HEX,SLFLKG, 1/2-13 GRB	8
3	1-512-010005-15	NUT,HEX,SLFLKG GRB 3/4-10	6
4	1-516-010001-27	NUT, HX SLOT 1-1/2-6 ZP	2
5	1-647-010004240	PIN,SPRING,SLOTTED 5/16X2-1/2	2
6	1-654-010061-06	SCREW,HXCP,3/4-10UNCX2-1/4GR5	6
7	1-654-010070-03	SCREW RDHD SQNK1/2-13X1-1/2	8
8	1-861-010032-20	WASHER, FLAT,3/4 N ZP/CD	12
9	1-861-010032-32	WASHER FLAT ZP/CD 1-1/2	2
10	227231	FRAME-MOUNT, REEL, WLDMT	1
11	227235	AXLE-PACKER, WLDMT	1
12	5J375	AXLE CLAMP ASSY	2
13	9J500	20" DUCTILE END WHEEL 700458	4
14	227150	PLATFORM-CLOSING, 2512, ASM **(SEE PAGE 7-1)** **(ALWAYS REPLACE W/ "AFTER 02/2022" CLOSING PLATFORM)**	1
15	230841	TUBE-SPACER, PACKER	1

Treader

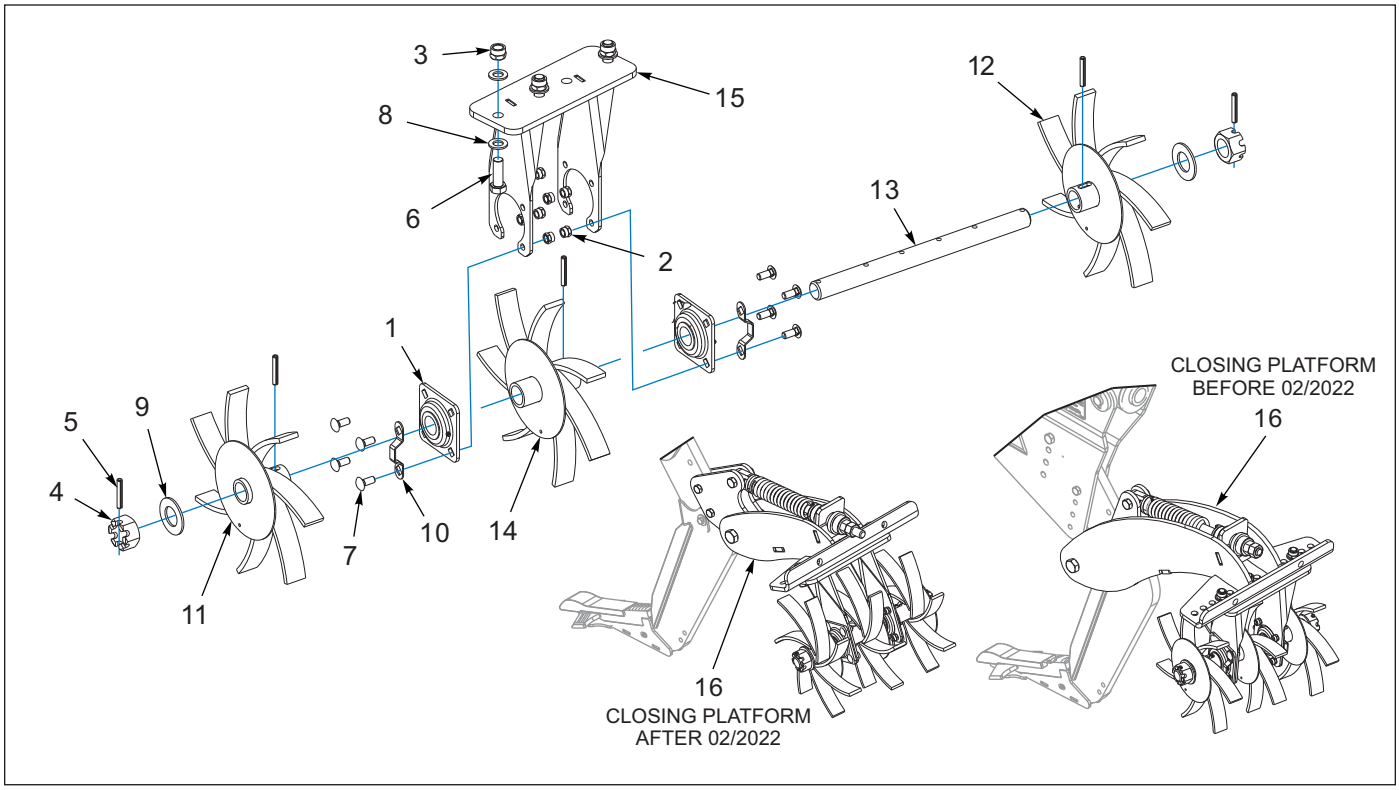

Figure 7-12: Treader

Treader

ITEM	PART NUMBER	DESCRIPTION	QTY.	
	224789	TREADER-LH, 2512, ASSY **(LEFT HAND)**	1	- -
	224790	TREADER-RH, 2512, ASSY **(RIGHT HAND)**	- -	1
1	1-065-010011	BEARING FLANGED 1-1/2ID	2	2
2	1-512-010005-09	NUT,HEX,SLFLKG, 1/2-13 GRB	8	8
3	1-512-010005-15	NUT,HEX,SLFLKG GRB 3/4-10	3	4
4	1-516-010001-27	NUT,HX SLOT 1-1/2-6 ZP	2	2
5	1-647-010004257	PIN,SPRING,SLOTTED 3/8X2-1/2	5	5
6	1-654-010061-06	SCREW,HXCP,3/4-10UNCX2-1/4GR5	3	4
7	1-654-010070-02	SCREW 1/2-13X1-1/4 RD HD SQNK	8	8
8	1-861-010032-20	WASHER, FLAT,3/4 N ZP/CD	7	8
9	1-861-010032-32	WASHER FLAT ZP/CD 1-1/2	2	2
10	206790	PLATE, BEARING ZERK SHIELD	2	2
11	217077	WLDMT,Ø 16" 7 TOOTH, LH FLAT	1	- -
11	217082	WLDMT,Ø 16" 7 TOOTH, RH FLAT	- -	1
12	217079	WLDMT,Ø 16" 7 TOOTH, LH FLAT	1	- -
12	217084	WLDMT,Ø 16" 7 TOOTH, RH FLAT	- -	1
13	227163	SHAFT-TREADER, 3 WHEEL GANG	1	1
14	227175	TREADER-16" 7 TOOTH, LH, WLDMT	1	- -
14	227176	TREADER-16" 7 TOOTH, RH, WLDMT	- -	1
15	227179	HANGER-BEARING, LH, WLDMT	1	- -
15	227180	HANGER-BEARING, RH, WLDMT	- -	1
16	227150	PLATFORM-CLOSING, 2512, ASM **(SEE PAGE 7-1)**	1	1
		(ALWAYS REPLACE W/ "AFTER 02/2022" CLOSING PLATFORM)		

Decals

Decals

Figure 8-1: Decals

Decals

ITEM	PART NUMBER	DESCRIPTION	QTY.
1	1-573-010006	PLACARD, NAME	1
2	1-573-010017	DECAL, LANDOLL (WHITE)	4
3	1-573-010096	DECAL, DANGER NO RIDERS	1
4	1-573-010373	DECAL, PATENT TILLAGE	1
5	141597	DECAL, DANGER ELECTROCUTION	1
6	156010	RIVET, BLIND, .156 X 1/2 GRIP	2
7	170510	DECAL-BRILLION A LANDOLL, 18"	4
8	2-573-010198	DECAL, MEMBER FEMA	1
9	209389	DECAL - DANGER, 16 IN DEPTH **(SPRING AUTO RESET ONLY)**	1
10	209390	DECAL - DANGER, OPERATING DEPTH **(SPRING AUTO RESET ONLY)**	1
11	214318	DECAL, 7 MPH MAX **(HYDRAULIC RESET ONLY)**	1
12	230886	DECAL, JACK STAND	1
13	528933	REFLECTOR - RED	2
14	528934	REFLECTOR - YELLOW	2
15	528938	STRIPE, ORANG E	2
16	6K800	DECAL-ZONE COMMANDER	4
17	8-573-010059	DECAL IMPORTANT NO TURNING	1
18	8-573-010084	DECAL WARNING BEFORE OPERATG	1
19	2-573-010037	DECAL, DANGER, WING	2
20	232182	DECAL-QR CODE, 2500 SERIES	1
21	207142	DECAL, DANGER STUCK SHANK **(ONE PER SHANK)**	REF
22	2-573-010469	DECAL, DANGER SPRING **(ONE PER SHANK)**	REF
23	227277	DECAL, DEPTH GAUGE, LH **(NOT SHOWN)** **(SEE PAGE 1-27) (SEE PAGE 1-29)**	1
24	227278	DECAL, DEPTH GAUGE, RH **(NOT SHOWN)** **(SEE PAGE 1-27) (SEE PAGE 1-29)**	1

Decal Placement

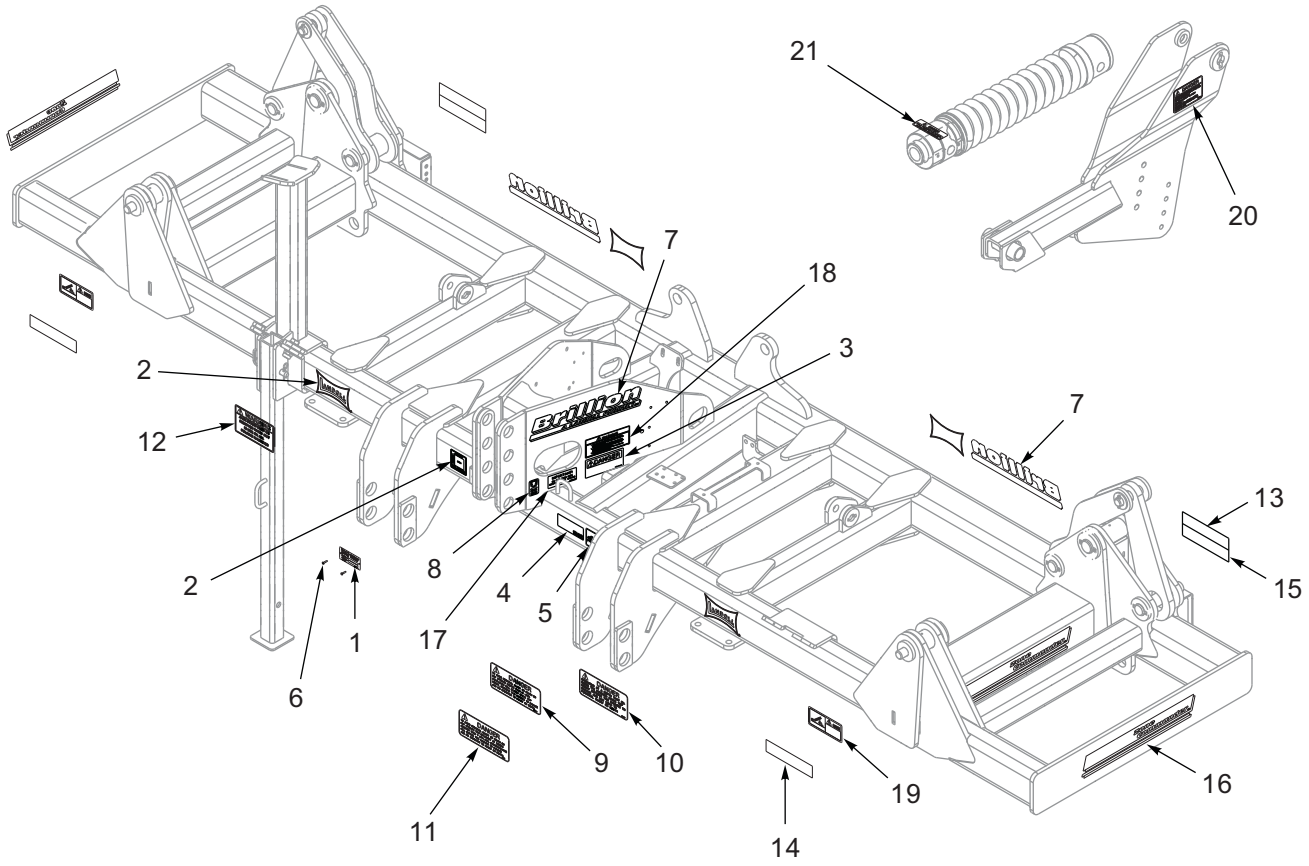

Figure 8-2: Decal Placement

Chapter 9

Glossary

For clarity this glossary of industry standard abbreviations and their definitions are provided.

A

ASM . . . . . .Assembly

B

BATT . . . . . .Battery
BHSC . . . . . .Button Head Socket Cap
BLK . . . . . Black

C

CB . . . . . .Carriage Bolt
CONN . . . . . Connector
CRG . . . . . Carriage
CTSK . . . . . Countersunk
CTWT . . . . . .Counterweight
CVR . . . . . .Cover
CYD . . . . . .Cylinder

D

DBL . . . . . .Double
DIA . . . . . Diameter

E

ENCLSD . . . . . Enclosed

F

FHCS . . . . . .Flanged Head Cap Screw
FHHCS . . . . . Flanged Hex Head Cap Screw
FL OR **FLG** . . . . . Flange
FLT . . . . . Flat

G

GA . . . . . Gauge

H

HHCS . . . . . .Hex Head Cap Screw
HCS . . . . . High Carbon Steel
HD . . . . . .Head
HLCL . . . . . .Helical
HCSKT . . . . . .Hex Socket
HSFC . . . . . .Hex Socket Flat Countersunk
HYD . . . . . Hydraulic

I

ID . . . . . Inside Diameter

L

LH . . . . . Lefthand
LKG OR **LOCK** . . . . . .Locking
LWR . . . . . Lower

M

MANF . . . . . Manifold
MNT . . . . . Mount

N

NRW . . . . . Narrow
- - - - - . . . . . .Not Serviced Separately

O

OD . . . . . Outside Diameter
OHG . . . . . .Overhead Guard
ORFS OR **ORS** . . . . . O-Ring Seal
ORP OR **ORB** . . . . . .O-Ring Boss

P

P-STEER . . . . . .Power Steering
PTFE . . . . . Polytetrafluoroethylene (Teflon)

R

RH . . . . . Righthand
RND . . . . . Round

S

SER . . . . . Series
SHCS . . . . . .Socket Head Cap Screw
SHLD . . . . . Shield
SKT . . . . . .Socket
SLFLKG . . . . . Selflocking
SOC . . . . . .Socket
SPDT . . . . . Single Pole Double Throw
SPR . . . . . Spring
SQ . . . . . Square
SRTD . . . . . Serrated
SSCR . . . . . .Setscrew
SST . . . . . Stainless Steel
STD . . . . . .Standard

U

UPR . . . . . Upper

W

WHL . . . . . Wheel
WLD OR **WLDMT** . . . . . Weldment

Chapter 10

Index

Numerics

0018136 . . . . . *4-17*
0600-250-01000 . . . . . *1-34*
0600-250-03000 . . . . . *1-34*
0600-375-01500 . . . . . *1-28*, *1-30*
1-007-010025 . . . . . *4-2*, *4-4*, *4-17*
100827 . . . . . *7-2*, *7-4*, *7-6*
101385 . . . . . *1-4*, *1-28*, *1-30*
101404 . . . . . *3-2*, *3-4*, *3-6*
101510 . . . . . *5-2*, *5-4*, *5-8*
101988 . . . . . *1-28*, *1-30*
102498 . . . . . *1-31*, *2-6*, *2-8*
102604 . . . . . *2-6*, *2-8*
103841 . . . . . *1-34*, *7-2*, *7-4*, *7-6*
104382 . . . . . *4-18*
104483 . . . . . *1-13*, *1-14*, *1-15*, *1-16*, *1-17*, *1-18*
104582 . . . . . *4-17*
1-065-010011 . . . . . *7-8*, *7-10*, *7-11*, *7-12*
1-076-010007 . . . . . *1-31*, *2-6*, *2-8*
1-076-010010 . . . . . *2-6*, *2-8*
108331 . . . . . *1-4*, *4-4*, *4-23*
110-0344 . . . . . *2-6*, *2-8*
110116 . . . . . *4-18*
111190 . . . . . *4-2*
116100 . . . . . *1-4*
116432 . . . . . *4-2*
116433 . . . . . *4-2*
121028 . . . . . *4-17*
122709 . . . . . *1-6*
122767 . . . . . *7-6*
122909 . . . . . *4-2*
122910 . . . . . *4-2*, *4-4*
122962 . . . . . *1-13*, *1-14*
123547 . . . . . *4-4*
127351 . . . . . *5-2*, *5-4*, *5-8*
1-298-010001-1 . . . . . *1-4*, *2-6*, *2-8*
134912 . . . . . *1-25*
134964 . . . . *1-13*, *1-14*, *1-15*, *1-16*, *1-17*, *1-18*, *1-19*
135912 . . . . . *4-24*
138567 *1-9*, *1-10*, *1-14*, *1-15*, *1-19*, *5-2*, *5-4*, *5-6*, *5-8*, *7-2*
139213 . . . . . *4-2*, *4-4*
1-397-010369036 . . . . . *4-2*
140191 . . . . . *1-28*, *1-30*
140554 . . . . . *1-31*
140645 . . . . . *1-31*
141236 . . . . . *1-31*
141238 . . . . . *1-31*
141251 . . . . . *1-7*, *1-8*, *1-9*, *1-10*, *1-11*, *1-12*
141597 . . . . . *8-2*
141809 . . . . . *1-28*, *1-30*
141826 . . . . . *4-2*, *4-4*
141828 *1-34*, *4-2*, *4-4*, *4-7*, *4-8*, *4-10*, *4-12*, *4-14*, *4-16*
141876 . . . . . *4-2*, *4-4*
141877 . . . . . *4-7*, *4-8*, *4-10*, *4-12*, *4-14*, *4-16*
1422177 . . . . . *4-2*
142337 . . . . . *4-7*, *4-8*, *4-10*, *4-12*, *4-14*, *4-16*
142668 . . . . . *1-34*
142669 . . . . . *1-34*
142753 . . . . . *1-2*, *1-4*
143871 . . . . . *1-34*
144457 . . . . . *1-7*, *1-8*, *1-9*, *1-10*, *1-11*, *1-12*
146693 . . . . . *4-17*
147072 . . . . . *1-4*, *4-24*, *5-2*, *5-4*, *5-8*
147583 . . . . . *4-2*, *4-4*
147584 . . . . . *4-2*, *4-4*
149192 . . . . . *2-2*, *2-4*
150244 . . *1-7*, *1-8*, *1-9*, *1-10*, *1-13*, *1-14*, *1-15*, *1-16*, *5-2*, *5-4*, *5-6*, *5-8*
1-510-010003-09 . . . . . *5-10*
1-512-010002-16 . . . . . *1-7*, *1-8*, *1-9*, *1-10*
1-512-010003-05 . . . . . *4-17*
1-512-010005-01 . . . . . *1-2*, *1-4*, *3-2*, *3-4*, *3-6*, *4-2*
1-512-010005-03 . . . . . *1-34*
1-512-010005-05 . . . *1-34*, *4-7*, *4-8*, *4-10*, *4-12*, *4-14*, *4-16*, *5-2*, *7-6*
1-512-010005-09 . *1-2*, *1-4*, *1-7*, *1-8*, *1-9*, *1-10*, *1-14*, *1-16*, *2-2*, *2-4*, *2-6*, *2-8*, *3-2*, *3-6*, *4-2*, *4-4*, *4-6*, *4-18*, *5-2*, *5-4*, *5-6*, *5-8*, *5-10*, *7-8*, *7-10*, *7-11*, *7-12*
1-512-010005-13 *1-7*, *1-8*, *1-9*, *1-10*, *1-13*, *1-14*, *1-15*, *1-16*, *1-28*, *1-30*, *2-2*, *2-4*, *3-2*, *3-6*, *5-2*, *5-4*, *5-6*, *5-8*

1-512-010005-15 *1-2, 1-7, 1-8, 1-9, 1-10, 1-11, 1-12, 1-13, 1-14, 1-15, 1-16, 1-22, 1-23, 1-24, 1-28, 1-30, 1-34, 2-6, 2-8, 3-2, 5-2, 5-4, 5-6, 5-8, 7-7, 7-8, 7-9, 7-10, 7-11, 7-12*
1-512-010005-19 *1-4, 1-7, 1-8, 1-9, 1-10, 1-11, 1-12, 1-13, 1-14, 1-15, 1-16, 1-17, 1-18, 1-19, 1-25, 1-30, 7-2, 7-4, 7-6*
1-512-010007-12 . . . . . *2-6, 2-8*
1-516-010001-20 . . . . . *1-31*
1-516-010001-27 . . . . . *7-8, 7-10, 7-11, 7-12*
153841 . . . . . *4-2*
155529 . . . . . *4-2, 4-4*
155530 . . . . . *4-7, 4-8, 4-10, 4-12, 4-14, 4-16*
1-557-010013 . . . . . *2-2, 2-4*
1-557-010362-40 . . . . . *4-20*
1-557-010362-51 . . . . . *1-31*
156010 . . . . . *8-2*
156318 . . . . . *4-7, 4-8, 4-10, 4-12, 4-14, 4-16*
1-573-010006 . . . . . *8-2*
1-573-010017 . . . . . *8-2*
1-573-010096 . . . . . *8-2*
1-573-010373 . . . . . *8-2*
162249 . . . . . *1-11*
162572 . . . . . *4-7, 4-8, 4-10, 4-12, 4-14, 4-16*
164142 . . . . . *3-2, 3-4, 3-6*
164349 . . . . . *1-31*
164352 . . . . . *1-28, 1-30, 1-31*
1-647-010004240 . . . . . *7-8, 7-10, 7-11*
1-647-010004255 . . . . . *5-2*
1-647-010004257 . . . . . *4-20, 7-12*
165287 . . . . . *4-2*
1-654-010032-25 . . . . . *1-11, 1-12*
1-654-010047-04 . . . . . *3-2, 3-6*
1-654-010047-06 . . . . . *1-2, 1-4, 3-2, 3-6*
1-654-010047-08 . . . . . *3-2, 3-4, 3-6*
1-654-010047-10 . . . . . *3-2, 3-4, 3-6*
1-654-010049-01 . . . . . *2-6, 2-8*
1-654-010049-05 . . . . . *1-34*
1-654-010051-05 . . . . . *4-17*
1-654-010051-07 . . . . . *4-12, 4-14, 4-16*
1-654-010051-10 . . . . . *5-2*
1-654-010051-11 . . . . . *1-34*
1-654-010051-12 . . . . . *7-6*
1-654-010051-13 . . . *4-7, 4-8, 4-10, 4-12, 4-14, 4-16*
1-654-010051-14 . . . *4-7, 4-8, 4-10, 4-12, 4-14, 4-16*
1-654-010055-03 . . *2-6, 2-8, 3-2, 3-6, 4-7, 4-8, 4-10, 4-12, 4-14, 4-16*
1-654-010055-04 . . . . . *4-6*
1-654-010055-07 . . . . . *5-10*
1-654-010055-09 . . . . . *1-4*
1-654-010055-10 . . . . . *1-2, 1-4*
1-654-010055-11 . . . . . *4-2, 4-4*
1-654-010055-13 . . . . . *2-2, 2-4*
1-654-010055-16 . . . . . *4-18*
1-654-010059-02 . . . . . *7-9*
1-654-010059-03 . . . . . *3-2, 3-6*
1-654-010059-05 . . . . . *1-28, 1-30*
1-654-010059-09 . . . . . *7-6*
1-654-010059-13 . . . . . *1-8, 1-10*
1-654-010059-14 . . . . . *1-7, 1-9*
1-654-010061-04 . . . . . *3-2*
1-654-010061-05 . . . . . *1-34*
1-654-010061-06 . . *1-22, 1-23, 1-24, 1-28, 7-8, 7-10, 7-11, 7-12*
1-654-010061-07 . . . . . *1-2*
1-654-010061-09 . . . . . *7-2, 7-4, 7-6*
1-654-010061-13 *1-7, 1-8, 1-9, 1-10, 1-13, 1-14, 1-15, 1-16, 5-2, 5-4, 5-6, 5-8*
1-654-010061-15 . . . . . *2-6, 2-8*
1-654-010061-21 . . . . . *1-11*
1-654-010061-25 . . . . . *1-11, 1-12*
1-654-010070-02 . . . . . *7-12*
1-654-010070-03 . . . . . *5-10, 7-8, 7-10, 7-11*
1-654-010125-18 . . . . . *7-2, 7-4*
1-655-010001-05 . . . . . *1-9, 1-10*
166171 . . . . . *4-4*
167297 . . . . . *1-28, 1-30*
168226 . . . . . *2-6, 2-8*
169493 . . . . . *5-2*
169690 . . . . . *3-6*
170510 . . . . . *8-2*
171000 . . . . . *4-17*
171589 . . . . . *4-18*
171591 . . . . . *4-18*
172581 . . . . . *1-7, 1-8, 1-9, 1-10, 1-11, 1-12*
172802 . . . . . *1-4, 1-13, 1-14, 1-15, 1-16, 1-17, 1-18*
172829 . . . . . *1-7, 1-8, 1-13, 1-16, 1-19, 7-4*
172946 . . . . . *1-4*
174435 . . . . . *3-2, 3-4, 3-6*
174436 . . . . . *3-2, 3-4, 3-6*
174437 . . . . . *3-2, 3-4, 3-6, 3-8*

175151 . . . . . 3-2, 3-4, 3-6, 3-8
176846 . . . . . 2-2, 2-4
176848 2-4
176849 2-4
178514 . . . . . 3-2, 3-4, 3-6, 3-8
179082 . . . . . 2-2, 2-4
179470 1-5
179545 . . . . . 2-2, 2-4
179546 . . . . . 2-2, 2-4
179547 . . . . . 2-2, 2-4
179966 . . . . . 2-2, 2-4
181085 2-4
181801 4-2
181843 2-2
181844 2-2
181845 2-2
182220 2-8
182222 2-8
182224 . . . . . 2-6, 2-8
182225 2-8
182233 2-8
182241 . . . . . 2-4, 2-8
182242 . . . . . 2-2, 2-8
182257 7-7
182270 1-34
182290 3-2
182310 . . . . . 3-2, 3-4
185216 . . . . . 4-10, 4-12, 4-14, 4-16
1-861-010032-07 . . . . . 1-2, 1-4, 3-2, 3-6
1-861-010032-09 . . . . . 2-6, 2-8
1-861-010032-14 . . . . . 4-6, 4-18, 5-2
1-861-010032-15 . . . . . 5-2, 5-4, 5-8
1-861-010032-18 . . . . . 1-8, 1-13, 1-14, 1-19
1-861-010032-20 1-22, 1-23, 1-24, 1-34, 2-6, 7-7, 7-8, 7-9, 7-10, 7-11, 7-12
1-861-010032-21 . 1-13, 1-14, 1-15, 1-16, 1-17, 1-18
1-861-010032-24 1-25
1-861-010032-29 1-4
1-861-010032-32 . . . . . 7-8, 7-10, 7-11, 7-12
1-861-010034-11 4-17
1-861-010034-15 7-9
186903 4-2
189739 4-18
189872 4-17
191655 1-2
191656 1-2
192481 . . . . . 4-2, 4-4
192890 1-5
193753 1-25
195196 4-17
195198 4-17
195566 . . 1-7, 1-8, 1-9, 1-10, 1-13, 1-14, 1-15, 1-16, 1-17, 1-18
197140 . . . . . 1-28, 1-30
1P042 1-34
201244 7-9
201283 4-17
201291 4-17
201321 4-6
202702-6-4S 4-20
202702-8-8S 4-2, 4-4, 4-17
202844 . . . . . 1-28, 1-30
203005-8-8S 4-2
203384 4-17
203386 . . . . . 4-7, 4-8, 4-10, 4-12, 4-14, 4-16
203486 . . . . . 1-28, 1-30
2062-8-8S 4-2
206790 7-12
207142 . . . . . 1-7, 1-8, 1-9, 1-10, 1-11, 1-12, 8-2
208812 4-2
209252 . . . . . 1-17, 1-18
209367 . . . . . 1-17, 1-18
209370 1-17
209372 . 1-13, 1-14, 1-15, 1-16, 1-17, 1-18, 4-7, 4-8, 4-10, 4-12, 4-14, 4-16, 4-22
209389 8-2
209390 8-2
209436 4-2
210874 . . . . . 1-13, 1-14, 1-15, 1-16, 1-17, 1-18
210879 . . 1-7, 1-8, 1-9, 1-10, 1-13, 1-14, 1-15, 1-16, 1-17, 1-18, 7-2, 7-4, 7-6
210880 7-9
210887 . . . . . 1-11, 1-12
210891 1-2
213207 1-2
213212 1-2
214260 . . . . . 4-10, 4-14
214261 . . . . . 4-10, 4-14
214265 . . . . . 1-28, 1-30
214268 1-28
214275 . . . . . 1-28, 1-30

214276 . . . . . 1-28, 1-30
214283 . . . . . 1-28, 1-30
214284 . . . . . 1-28, 1-30
214297 4-12
214305 . . . . . 4-7, 4-8, 4-10, 4-12, 4-18
214307 4-6
214310 4-6
214315 . . . . . 4-7, 4-8, 4-10, 4-12, 4-14, 4-16
214316 . . . . . 3-2, 3-4, 3-6
214317 . . . . . 3-2, 3-6
214318 8-2
214319 4-17
214335 3-2
214336 3-4
214337 1-30
214346 . . . . . 4-7, 4-8, 4-10, 4-12, 4-14, 4-16
214347 1-30
214351 1-30
214353 1-2
214355 . . . . . 4-14, 4-16, 4-18
214375 1-18
214376 4-7
214377 4-8
214378 4-10
214381 4-14
214384 4-17
214396 5-10
214397 1-11
2-150-010174 1-5
217077 7-12
217079 7-12
217082 7-12
217084 7-12
217183 4-6
217196 . . . . . 1-11, 1-12
217200 4-8
217201 4-10
217202 4-12
217203 4-14
217210 . . . . . 4-10, 4-12, 4-14
217211 . . . . . 4-7, 4-8, 4-10, 4-12, 4-14, 4-16
217212 . . . . . 4-7, 4-8, 4-10, 4-12, 4-14, 4-16
217213 . . . . . 4-7, 4-8, 4-10, 4-12, 4-14, 4-16
217214 . . . . . 4-10, 4-12, 4-14
217215 . . . . . 4-8, 4-12, 4-16
217216 . . . . . 4-7, 4-8, 4-10, 4-12, 4-14, 4-16
217217 . . . . . 4-10, 4-12, 4-14
217218 . . . . . 4-14, 4-16
217219 . . . . . 4-7, 4-8, 4-10, 4-14, 4-16
217220 4-14
217221 4-16
217281 4-16
217335 1-28
217336 1-28
217337 1-30
217338 1-30
217969 1-11
217988 . . . . . 4-7, 4-8, 4-10, 4-12, 4-14, 4-16
218755 . . . . . 1-13, 1-14, 1-15, 1-16, 1-17, 1-18, 1-19
218757 1-19
218760 1-19
218785 . . . . . 1-7, 1-8, 1-9, 1-10, 1-11, 1-12
219955 1-5
219973 1-5
219974 1-5
219977 1-5
219978 1-5
219980 1-5
219981 1-5
219983 1-5
219991 1-5
219992 1-5
219995 1-5
219996 1-6
221311 1-6
221312 1-6
221314 1-5
221318 1-6
221319 1-6
221412 . . . . . 1-7, 1-8, 1-9, 1-10, 1-11, 1-12
221428 . . . . . 1-11, 1-12
221433 . . . . . 1-11, 1-12
221434 1-17
221438 1-18
221441 1-12
221445 1-12
221737 4-12
221738 4-14
221739 4-16
221747 4-12

221748 4-14
221749 4-16
221797 3-8
221924 1-6
221925 . . . . . 1-2, 1-6
221926 1-6
221927 1-6
221939 1-5
221943 1-5
221947 1-6
221948 1-6
221954 3-6
221963 . . . . . 1-22, 1-23, 1-24
221967 3-6
221990 . . . . . 1-22, 1-23, 1-24
221993 . . . . . 1-22, 1-23, 1-24
221997 . . . . . 1-22, 1-23, 1-24
221998 . . . . . 1-22, 1-23, 1-24
222011 1-6
222015 . . . . . 1-22, 1-23, 1-24
223319 3-8
223397 . . . . . 4-2, 4-4
223398 . . . . . 4-2, 4-4
223399 . . . . . 4-2, 4-4
224446 1-34
224450 1-6
224451 1-6
224452 1-6
224467 . . . . . 4-2, 4-4
224468 . . . . . 4-2, 4-4
224743 5-4
224744 . . . . . 5-4, 5-10
224745 5-4
224746 . . . . . 5-2, 5-10
224747 5-2
224748 5-2
224752 . . . . . 5-4, 5-8
224763 5-8
224767 5-8
224768 . . . . . 5-6, 5-8, 5-10
224786 4-22
224787 4-23
224789 7-12
224790 7-12
227126 . . . . . 7-2, 7-4, 7-6
227127 7-6
227129 7-6
227132 . . . . . 7-2, 7-4, 7-6
227147 . . . . . 7-2, 7-4, 7-6
227148 . . . . . 7-2, 7-4, 7-6
227150 . 7-2, 7-4, 7-6, 7-7, 7-8, 7-9, 7-10, 7-11, 7-12
227163 7-12
227170 7-9
227173 7-9
227175 7-12
227176 7-12
227179 7-12
227180 7-12
227189 6-1
227191 6-1
227198 6-1
227207 6-1
227210 6-1
227221 6-2
227225 7-8
227228 7-7
227231 . . . . . 7-8, 7-10, 7-11
227232 7-8
227235 . . . . . 7-10, 7-11
227236 7-9
227237 7-10
227242 7-11
227245 6-2
227247 . . . . . 5-10, 6-1
227265 6-1
227267 6-1
227271 6-1
227272 6-1
227273 6-1
227275 . . . . . 1-28, 1-30
227276 . . . . . 1-28, 1-30
227277 . . . . . 1-28, 1-30, 8-2
227278 . . . . . 1-28, 1-30, 8-2
227280 . . . . . 4-12, 4-16
227281 . . . . . 4-12, 4-16
227282 . . . . . 4-14, 4-16
227283 . . . . . 4-14, 4-16
227284 4-16
227299 5-10
227876 . . . . . 4-12, 4-14, 4-16

227917 . . . . . 7-2, 7-4, 7-6
227919 . . . . . 7-2, 7-4, 7-6
227921 . . . . . 7-2, 7-4, 7-6
227922 . . . . . 7-2, 7-4, 7-6
227925 . . . . . 7-2, 7-4, 7-6
230839 7-10
230841 7-11
230869 . . . . . 1-22, 1-23, 1-24
230870 . . . . . 1-22, 1-23, 1-24
230873 1-24
230874 1-24
230875 1-24
230876 1-24
230880 1-25
230883 1-25
230884 1-25
230886 . . . . . 1-25, 8-2
230888 1-25
230889 4-20
230890 4-20
230894 4-20
230895 4-20
230896 4-20
231922 1-30
232182 8-2
233781 4-20
233782 4-20
233783 4-20
233784 4-20
233785 4-20
233786 4-20
233787 4-20
233788 4-20
233789 4-20
233790 4-20
233791 4-20
233795 1-6
233828 1-5
233830 1-5
233833 . . . . . 1-4, 4-25
233835 2-6
233836 2-6
233838 2-6
233841 . . . . . 2-2, 2-6
233842 . . . . . 2-4, 2-6
233845 2-6
233847 2-6
233849 2-6
233850 2-6
233851 2-6
233852 1-5
233855 1-5
233856 1-5
233857 1-5
233858 1-5
233859 1-5
233860 1-5
233861 1-5
233862 1-5
233865 1-5
233866 1-5
233867 1-6
233868 1-6
233870 . . . . . 1-4, 4-2, 4-24
233873 2-2
233874 2-4
233875 2-2
233876 2-4
233877 2-2
233878 2-4
233887 2-6
235887 1-6
235888 1-6
235889 1-6
235892 1-6
235961 1-34
235965 1-34
235966 1-34
235967 1-34
2-368-010287 . . . . . 3-2, 3-4, 3-6
239243 . . . . . 1-13, 1-14, 1-15, 1-16, 1-17, 1-18
239291 . . . . . 7-2, 7-4
239293 . . . . . 7-2, 7-4
239516 . . . . . 1-7, 1-8, 1-9, 1-10
239522 . . . . . 1-8, 1-13, 1-14, 1-15, 1-16
240193 1-34
240198 1-34
240265 1-2
240266 1-2
240314 . . . . . 1-7, 1-8, 1-9, 1-10

240317 . . . . . 1-9, 1-10
240342 . . . 1-7, 1-8, 1-9, 1-10, 1-13, 1-14, 1-15, 1-16
240957 4-24
240958 4-24
240959 4-24
240960 4-24
241980 . . . . . 1-7, 1-9, 1-10
242817 . . . . . 1-8, 1-10
242821 . . . . . 1-8, 1-10
242823 . . . . . 1-13, 1-15
242824 . . . . . 1-13, 1-15
242825 . . . . . 1-13, 1-14, 1-15, 1-16
242827 . . . . . 1-13, 1-14, 1-15, 1-16
242828 3-6
242849 . . . . . 1-14, 1-16
242850 . . . . . 1-14, 1-16
243054 . . . . . 1-7, 1-8, 1-13, 1-14, 1-15, 1-16
243128 . . . . . 1-7, 1-9
243129 . . . . . 1-7, 1-8
243130 . . . . . 1-7, 1-9
247304 . . . . . 4-7, 4-8, 4-10, 4-12, 4-14, 4-16
247319 5-10
2-474-010022 . . . . . 4-2, 4-4
253721 . . . . . 1-7, 1-19
253737 4-25
253890 1-22
253894 1-22
2-557-010417 1-2
2-573-010037 8-2
2-573-010198 8-2
2-573-010469 . . . 1-7, 1-8, 1-9, 1-10, 1-11, 1-12, 8-2
3/4-10X2-1/2CB 7-7, 7-9
3/4-16HSN 2-6, 2-8
3-375-010371 1-34
3J397 . . . . . 2-6, 2-8
3J608 1-25
3K608 2-8
3K613 . . . . . 2-6, 2-8
4001311 . . . . . 1-22, 1-23, 1-24
40-0665-02 4-20
4K076 2-8
4K551 5-10
4K607 4-17
528933 8-2
528934 8-2
528938 8-2
5D954 . . . . . 2-2, 2-4
5D979 . . . . . 1-6, 1-13, 1-14, 1-15, 1-16
5J375 . . . . . 7-10, 7-11
5J425 5-10
61D16ER 7-2, 7-4, 7-6
622-3511-008 . . . . . 1-7, 1-8, 1-9
6D337 . . . . . 2-6, 2-8
6J460 . . . . . 7-2, 7-4, 7-6
6K351 7-10
6K352 7-10
6K478 5-10
6K800 8-2
70260977 . . . . . 3-2, 3-4, 3-6
71508954 4-2
71508984 4-2
71508987 4-4
7D642 4-20
7J569 . . . . . 2-6, 2-8
7K286 . . . . . 1-28, 1-30
7K723 1-34
8-557-010095 . . . . . 2-2, 2-4
8-573-010059 8-2
8-573-010084 8-2
8K756 . . . . . 2-2, 2-4
900598-12S 4-18
9J500 7-11
9K289 . . . . . 2-2, 2-4
9K295 2-8
9K453 . . . . . 2-6, 2-8
9K454 . . . . . 2-6, 2-8

C

CO-975-74-2000 1-34

Instructions for Ordering Parts

**** Repair parts must be ordered through an Authorized Dealer ****

DEALER INSTRUCTIONS FOR ORDERING PARTS FROM LANDOLL PARTS DISTRIBUTION CENTER

Phone: 800-423-4320 or 785-562-5381 **Fax: 888-527-3909**
Order online: dealer.landoll.com

DATA PLATE

The Data Plate, which lists the model number and serial number, is located on the front of the frame.

SERIAL NUMBER

The following information will help decode the serial number.
25C2400100 = xxmyyssssss

xx	= model series (i.e. “25” for all Zone Commanders)
m	= month of manufacture (ex. “C” means March. The letter I is not used.)
yy	= year manufactured (ex. “24” means 2024)
sssss	= sequential number used to track warranty and service information.

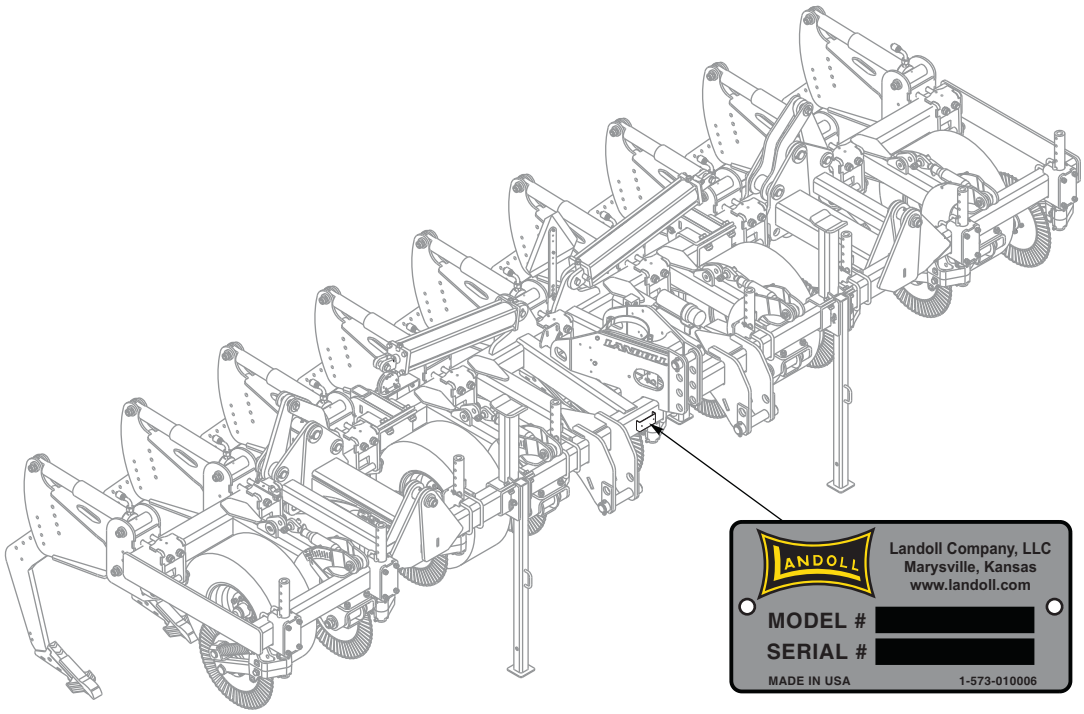

Figure: Data Plate

Manuals for 2512 Zone Commander and Caddy

FOR UNITS SHIPPED AFTER DECEMBER1, 2020 (SN: 25M201237 AND ABOVE)
PREVIOUS UNITS SHOULD REFERENCE F-1039-0320

Manual Number	Manual Type
F-1049	Operator’s Manual
F-1048	Parts Manual **(2512 Zone Commander ONLY)**
F-1075	Caddy Parts Manual **(ONLY)**

Document Control Revision Log:

Date	Form #	Improvement(s): Description and Comments
05/2020	F-1048	Initial Release
12/2020	F-1048-1220	ECN 46496, 46468, 46559 - Shanks, Depth Gauge and Decal, Hydraulic Hose Asm ECN 46500, 46650 - Frame, Warning Light Asm Added Closer Platform and Finishing Features, Available Points
01/2021	F-1048-0121	ECN 46795 - Updated Wing Rest Weldments ECN 46837 - Added Rear Jack Option and Decals
10/2021	F-1048-1021	ECN 46857, 47254 - Updated Frame Weldment, Shank, Shank Points, Shank Clamp ECN 47263 - Added Cylinder Stop, Hyd. Adapter Kit, Updated Keeper Wear Guard ECN 47137, 47144, 47307 - Changes to Front Jack Mount, Updated Decals, ECN 47438 - Changes to Folding Frame, Hydraulic Cylinder ECN 47589 - Rev. to Hyd. Shank Hose Asm, Jack and Wing Rest, Stop Cylinders ECN 47623 - Revisions to Parabolic Shank, 1-1/4 Added Finishing Treader Option, Added Coulter Center Positions
12/2021	F-1048-1221	ECN 47679 - Rev. to Parabolic Keeper-Wear Guard and Parabolic Shank Hardware
01/2022	F-1048-0122	ECN 47822 - Add Shank Hardware Kit ECN 47824 - Revised Parabolic Keeper-Wear Guard, Clamp Designs/Torque Values
05/2022	F-1048-0522	ECN 47953, 48076 - Updated Closing Platform Design, Updated Coulter Asm
06/2022	F-1048-0622	ECN 48205 - Added Rear Tow Bar Hitch ECN 48212 (CASR 2283)
01/2023	F-1048-0123	ECN 48550 - Doubler Plates Added to Rigid Frame, Hitch Pin Changes
03/2023	F-1048-2303	ECN 48729 - Changes to Shank Clamp ECN 48900 - Change to 233855 Frame - Cylinder Mount Plates *Revision Format “Year/Month” 07/11/2023 - Correction “Folding Frame” pages 1-3, 1-6 (Item 41, 42)
09/2023	F-1048-2309	ECN 49102 - Revised Wheel Gauges, Auto Reset Spring Clamp (and w/Setback), Wing Rest Weldments, Hose Assemblies, Accumulator Assembly
01/2024	F-1048-2401	ECN 49405, 49409, 49479, 49597 - Coverboard Kit, Warning Light Mount Bracket Depth Gauge Decal, Shanks, Clamps ECN 49817 - New Radius for Jack Stand Weldment (PUB 03/15/2024) Updated ISO logos to ISO 9001:2015 (Revised 04/2024)
06/2024	F-1048-2406	ECN 49901 - Rigid Clamp and Shanks Assemblies ECN 49957 - Revised Closing Platform ECN 50134 - Adapter Quantities (PUB 09/11/2024)
09/2024	F-1048-2409	ECN 50222 - Closing Platform Bolt Change
11/2024	F-1048-2411	Add Wing Lock Kit ECN 50527 - Change to Wear Guard Keeper (PUB 01/27/2025)
05/2025	F-1048-2505	ECN 50633 - Auto Reset Shank Clamp Asm, Hydraulic and Setback ECN 50960 - Shank Clamp Assemblies (PUB 06/12/2025)
10/2025	F-1048-2510	ECN 49601, 49641 - Shear Bolt changes to 243130 & 242821 Shank Clamp Asm
01/2026	F-1048-2601	ECN 51698 - Shank Clamp Asm ECN 52123 - Finishing Roll Pin (PUB 06/24/2026)
07/2026	F-1048-2607	ECN 51800, 52221 - 3/4 Straight Leg Shank and Point, Wing Rest, Jack Stands ECN 52221 - 2511N-11 Shanks - Jack Stand / Wing Rests (PUB 09/04/2026) ECN 52254 - Hydraulic Auto Reset Shank Clamp Spacer and Screws (PUB 09/04/2026)

Equipment from Landoll Company, LLC is built to exacting standards ensured by ISO 9001:2015 registration at all Landoll manufacturing facilities.

2512 Zone Commander

Parts Manual

Re-Order Part Number F-1048

LANDOLL COMPANY, LLC
1900 North Street
Marysville, Kansas 66508
(785) 562-5381
800-428-5655 ~ WWW.LANDOLL.COM

Copyright 2026. Landoll Company, LLC
"All rights reserved, including the right to reproduce this material or portions thereof in any form."