2512 Zone Commander
Standard & Heavy Duty Caddy
Parts Manual

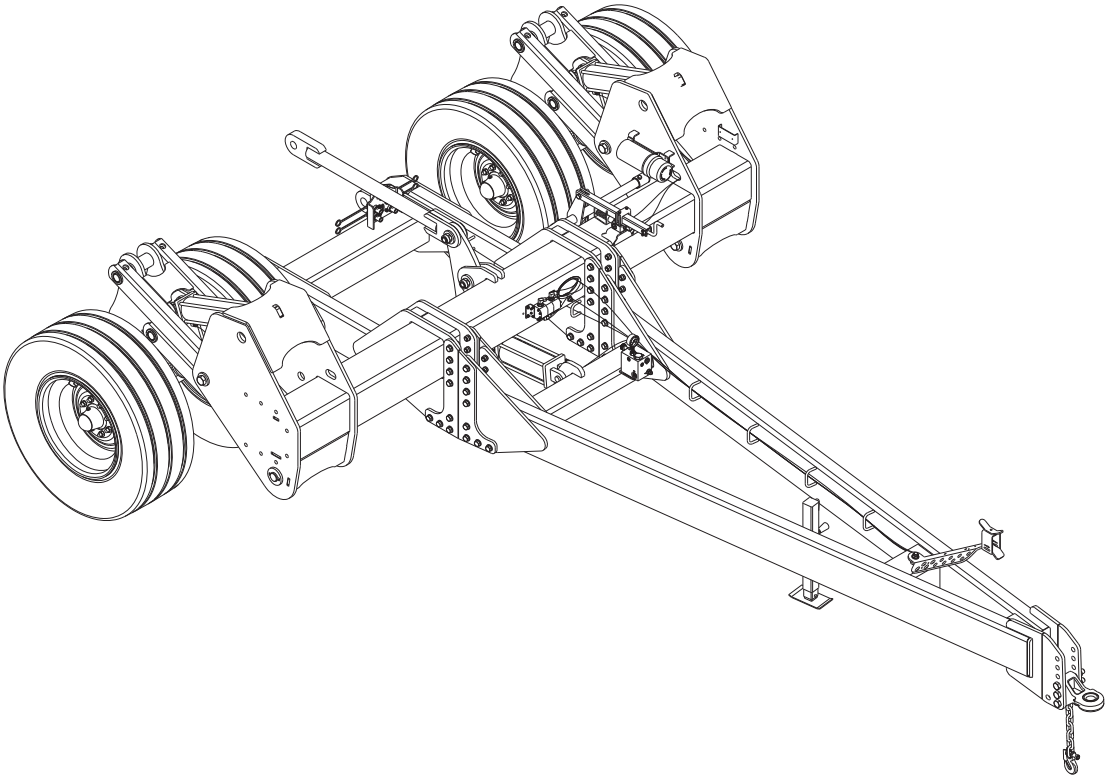

LANDOLL COMPANY, LLC
1900 North Street
Marysville, Kansas 66508
(785) 562-5381
800-428-5655 ~ WWW.LANDOLL.COM

F-1076-2510

Instructions for Ordering Parts

**** Repair parts must be ordered through an Authorized Dealer ****

DEALER INSTRUCTIONS FOR ORDERING PARTS FROM LANDOLL PARTS DISTRIBUTION CENTER

Phone: 800-423-4320 or 785-562-5381 **Fax: 888-527-3909**
Order online: dealer.landoll.com

DATA PLATE

The Data Plate lists the model number and serial number, is located on the front of the frame.

SERIAL NUMBER

The following information will help decode the Landoll serial number.
25D2400100 = xxmyyssssss

xx	= model series (i.e. “25” for all 2512 Models)
m	= month of manufacture (ex. “D” means April. The letter I is not used.)
yy	= last digits of the year manufactured (ex. “24” means 2024)
sssss	= Sequential number used to track warranty and service information.

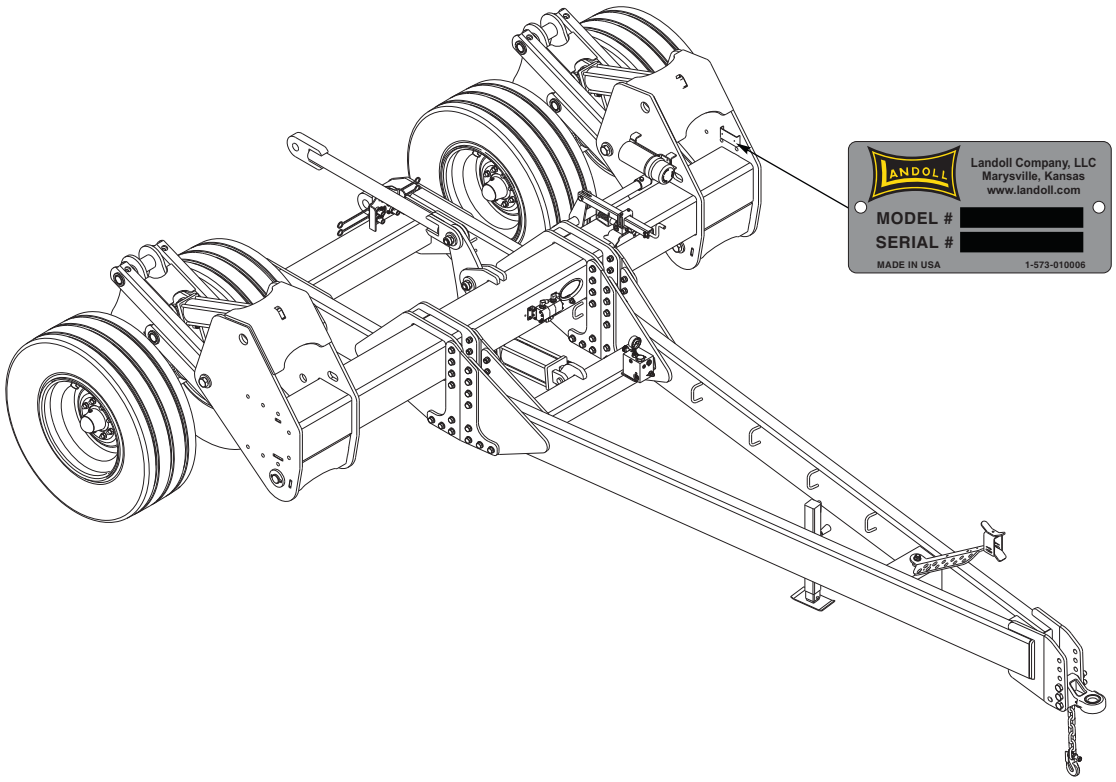

Manuals for Caddy

Manual Number	Manual Type
F-1076	Caddy Parts Manual

Table of Contents

1 Axle

Standard Caddy Axle Spindle and Mount Assembly 1-1
Heavy Duty Caddy Axle Spindle and Mount Assembly 1-3
Standard Caddy Axle Spindle and Hub Assembly 1-5
Heavy Duty Caddy Axle Spindle and Hub Assembly 1-6
Standard Caddy Wheel & Tire Assembly 1-7
Heavy Duty Caddy Wheel & Tire Assembly 1-8

2 Electrical

Wiring Components 2-1
Wiring Diagram 2-3

3 Frame

Standard Caddy Bottom and Top Link Assembly 3-1
Heavy Duty Caddy Bottom and Top Link Assembly 3-3
Standard Axle Lift Assembly 3-5
Heavy Duty Axle Lift Assembly 3-7
Standard Caddy Depth Control Assembly 3-9
Heavy Duty Caddy Depth Control Assembly 3-11
Depth Control Tube Assembly 3-13
Standard Caddy Hitch Assembly 3-15
Heavy Duty Caddy Hitch Assembly 3-17
Lockout Assembly 3-19
Manual Holder and Hydraulic Couplers 3-20

4 Hydraulics

Hydraulic Kit (AFTER 09/2025) 4-1
Hydraulic Kit (BEFORE 09/2025) 4-3
Manifold-Draft Assembly 4-5
Caddy Auxiliary Circuit 4-7
Caddy Wing Circuit 4-8
Caddy Top Link Circuit 4-9
Caddy Lift Circuit (AFTER 09/2025) 4-11
Caddy Lift Circuit (BEFORE 09/2025) 4-13
Lift Cylinder, 4 x 20 - 227296 4-15
Lift Cylinder, 4-1/2 x 20 - 221792 4-16
Top Link Cylinder, 5 x 10 - 224457 4-17

5 Decals

Decals 5-1
Decal Placement 5-3

6 Glossary

7 Index

Axle

Standard Caddy Axle Spindle and Mount Assembly

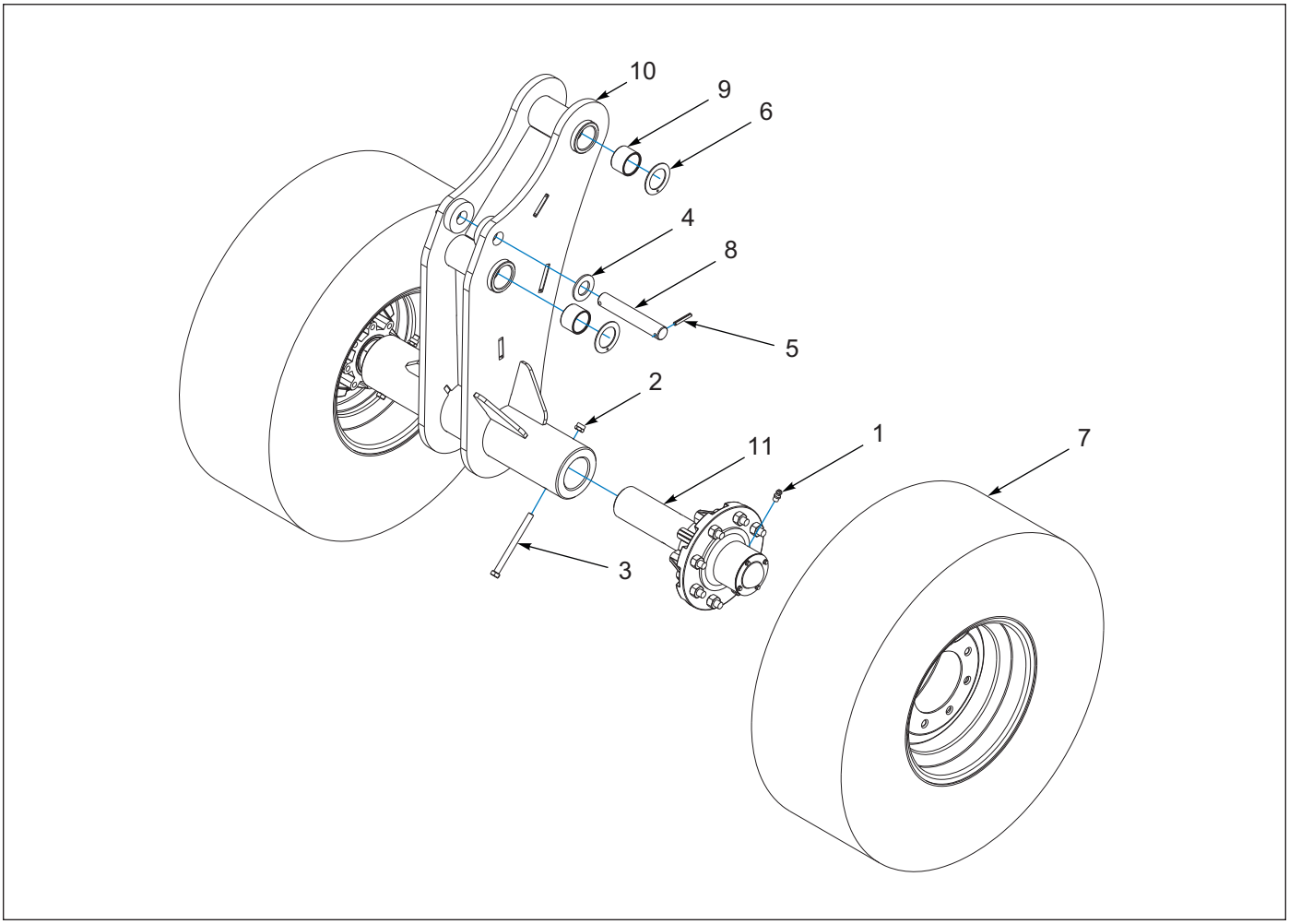

Figure 1-1: Standard Caddy Axle Spindle and Mount Assembly

Standard Caddy Axle Spindle and Mount Assembly

ITEM	PART NUMBER	DESCRIPTION	QTY.
1	1-298-010001-1	ZERK FITTING 1/4 SAE	2
2	1-512-010005-09	NUT,HEX,SLFLKG, 1/2-13 GRB	2
3	1-654-010055-17	SCREW,HEX CAP,1/2-13UNCX6 GR5	2
4	116100	WASHER 1-1/4 NAR FL ZP/CD	2
5	147072	PIN, SPRING SLOTTED 5/16 X 2	1
6	164472	WASHER, THRUST 2	2
7	230909	TIRE ASSY,320/70R15,8 BLT WHL **(WHEEL COLOR: OFF-WHITE)** **(SEE PAGE 1-7)**	2
8	1P675	PIN, 1.25 X 7.5 H2	1
9	215458	BRG, 2-1/4 X 2 X 1-1/2L W/ LIP	2
10	223337	MOUNT-SPINDLE, WLDMT	1
11	223440	ASSY, 8 BOLT HUB & SPINDLE **(SEE PAGE 1-5)**	1

Table provided for general use.

NOTES:

Heavy Duty Caddy Axle Spindle and Mount Assembly

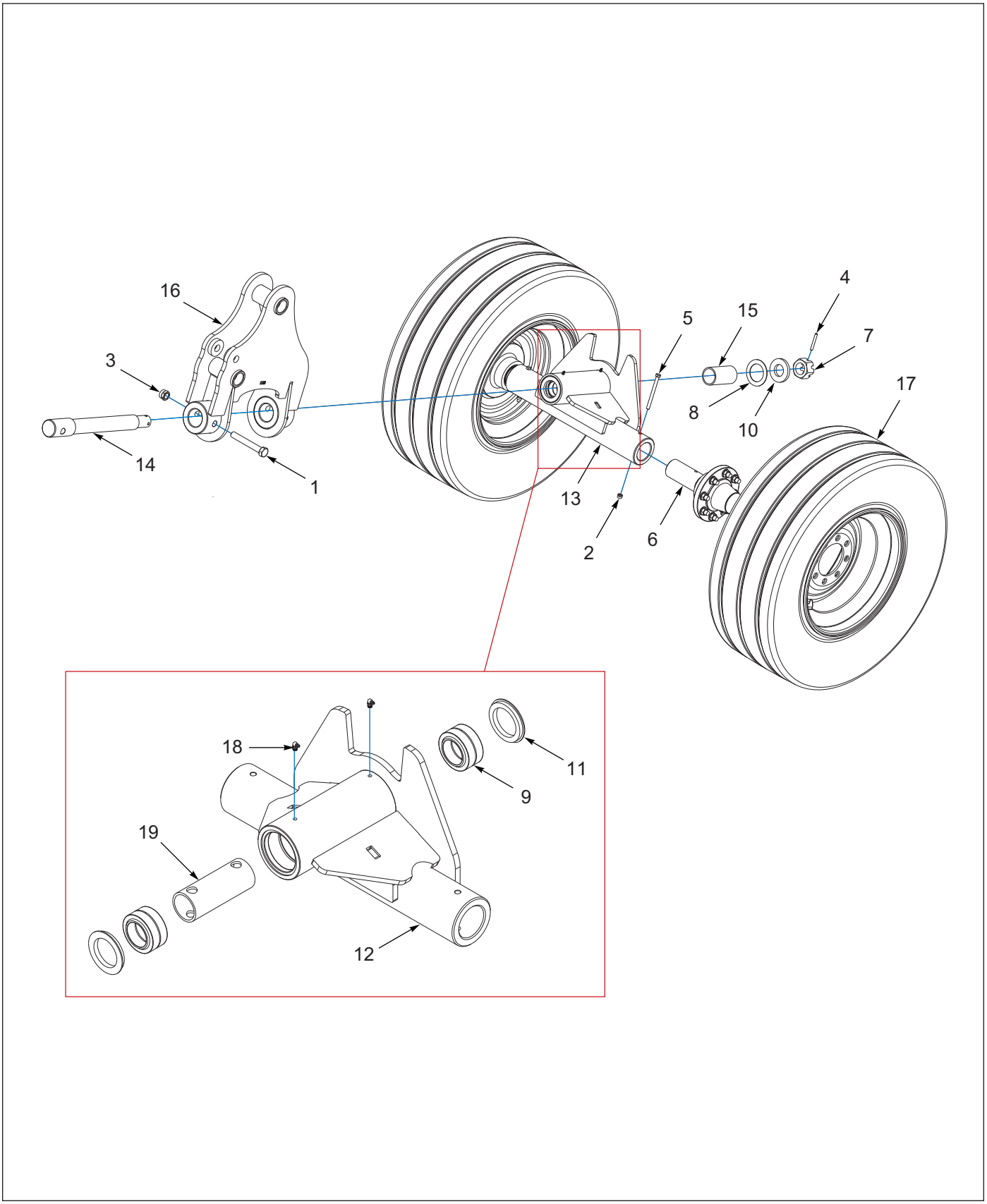

Figure 1-2: Heavy Duty Caddy Axle Spindle and Mount Assembly

Heavy Duty Caddy Axle Spindle and Mount Assembly

ITEM	PART NUMBER	DESCRIPTION	QTY.
1	122767	SCREW,HEX CAP 1-8UNCX7 GR8	1
2	1-512-010005-09	NUT,HEX,SLFLKG, 1/2-13 GRB	2
3	1-512-010005-19	NUT 1-8 HEX SLF-LOCKING GRB	1
4	1-647-010004259	SPRING PIN, SLOTTED 3/8X3	1
5	1-654-010055-17	SCREW,HEX CAP,1/2-13UNCX6 GR5	2
6	170704	HUB & SPDL ASSY 3.25", 8 BOLT **(SEE PAGE 1-6)**	2
7	172891	NUT HX SLOT 2-4-1/2 ZP	1
8	179488	WASHER - BACKER, THRUST, SS	1
9	186592	BUSHING, SELF ALIGNING 2-1/2	2
10	187317	WASHER-HEAVY, 4X2X1/2	1
11	193089	SEAL, PURGABLE 4 OD X 3 ID	2
12	221333	AXLE-SPINDLE, WLDMT	1
13	221357	AXLE-SPINDLE, TOGGLE, ASM **(INCLUDES ITEMS 9, 11, 18, 19)**	- -
14	221360	PIN-TOGGLE, AXLE	1
15	221361	BUSHING, TOGGLE AXLE	1
16	223340	MOUNT-AXLE, TOGGLE, WLDMT	1
17	230904	WHEEL,TIRE,385/65R22.5,8 BOLT **(WHEEL COLOR: OFF-WHITE)** **(SEE PAGE 1-8)**	2
18	5400	GREASE FITTING 1/8NPT X 90	2
19	227102	SLEEVE-SUPPORT,INNER, BEARING **(ADDED 03/12/2020)**	1

Standard Caddy Axle Spindle and Hub Assembly

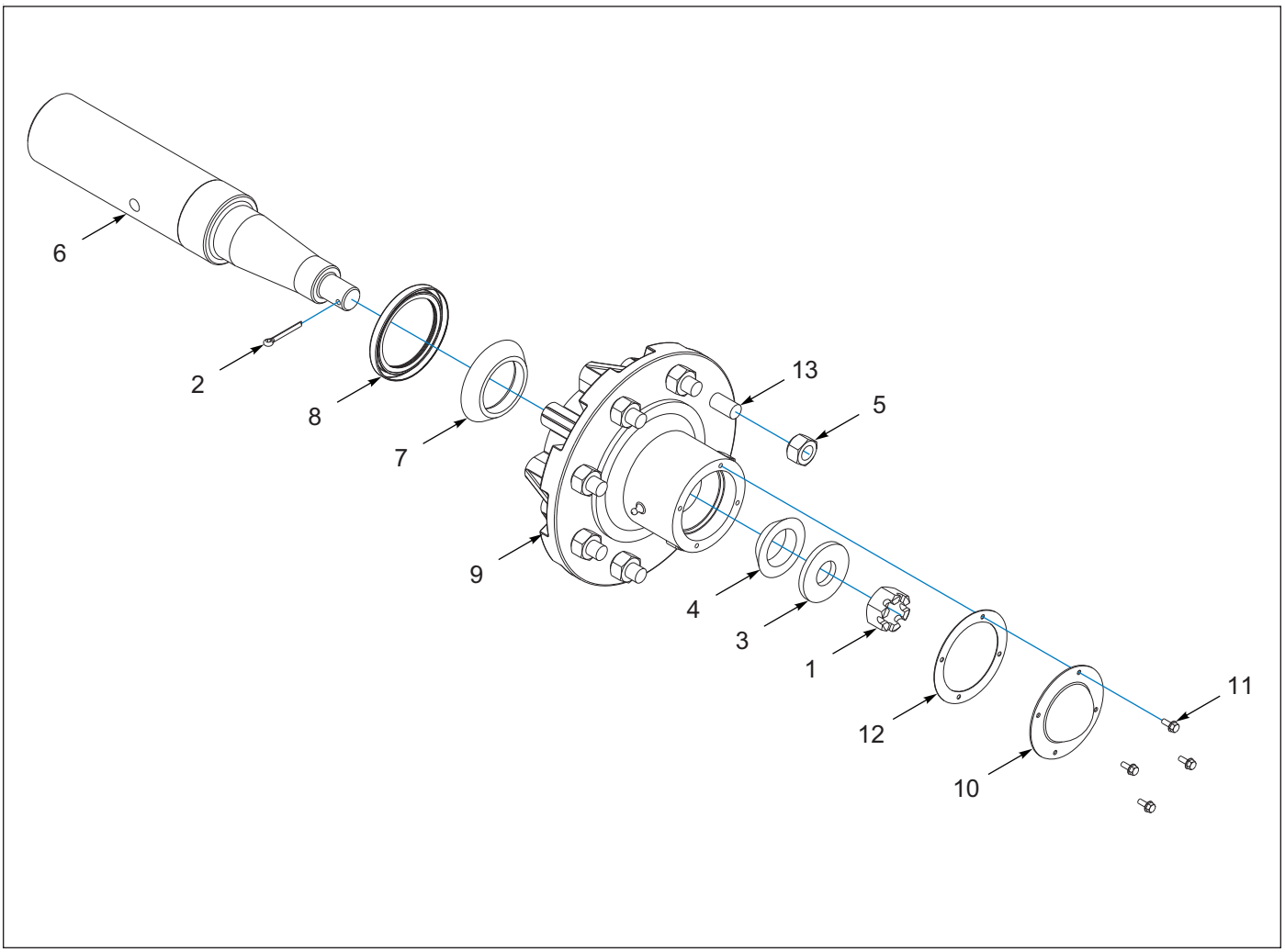

Figure 1-3: Standard Caddy Axle Spindle and Hub Assembly

Standard Caddy Axle Spindle and Hub Assembly

ITEM	PART NUMBER	DESCRIPTION	QTY.
	223440	ASSY, 8 BOLT HUB & SPINDLE	- -
1	1-516-010001-20	NUT, HX SLOT 1-14	1
2	1-557-010362-51	PIN, COTTER 3/16X1-1/2	1
3	1-861-010005	WASHER, SPINDLE 1	1
4	102498	BEARING CONE,OUTER, 1.625	1
5	102600	NUT, WHEEL BOLT 5/8	8
6	156973	SPINDLE 3 X 16-1/2	1
7	156979	CONE BEARING - 387AS	1
8	159970	SEAL,TRIPLE LIP 4 ODX3 IDX3/8	1
9	223435	HUB ASSY W/ CUPS,GASKET,CAP	1
10	223437	DUST CAP, BOLT ON	1
11	223438	SCREW, 10-32X1/2 HEX FLANGE	4
12	223439	GASKET, DUST CAP	1
13	4001060	HUB 75-8 BOLTS 5/8-18 STUD	8

Heavy Duty Caddy Axle Spindle and Hub Assembly

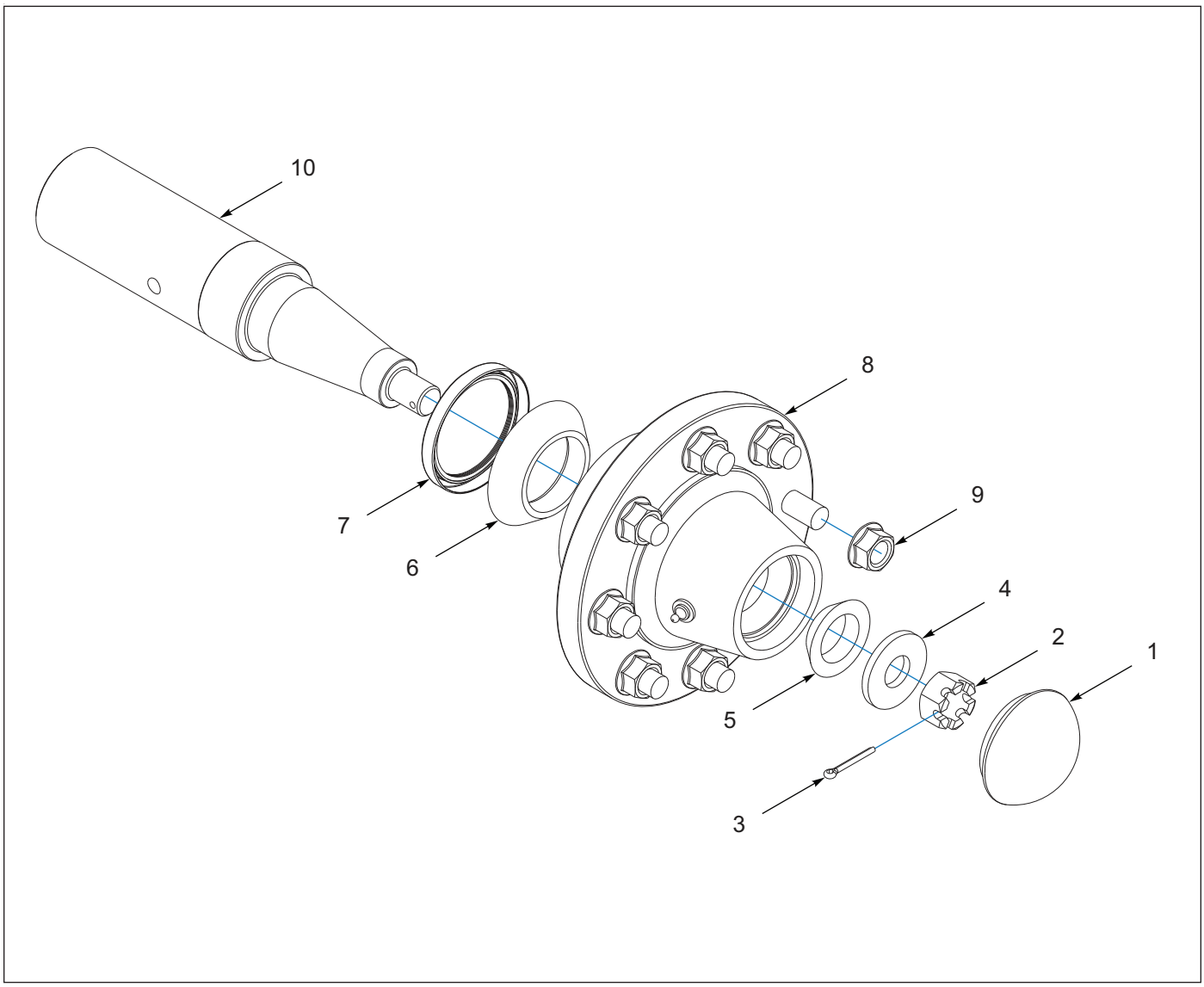

Figure 1-4: Heavy Duty Caddy Axle Spindle and Hub Assembly

Heavy Duty Caddy Axle Spindle and Hub Assembly

ITEM	PART NUMBER	DESCRIPTION	QTY.
	170704	HUB & SPDLE ASSY 3.25”, 8 BOLT	- -
1	102601	HUB CAP, 8-BOLT HUB	1
2	1-516-010001-20	NUT, HX SLOT 1-14	1
3	1-557-010362-51	PIN, COTTER 3/16X1-1/2	1
4	1-861-010005	WASHER, SPINDLE 1	1
5	102498	BEARING CONE,OUTER, 1.625	1
6	170310	CONE BEARING-39250-39412	1
7	171107	SEAL,TRIPLE LIP4.125ODX3.251ID	1
8	170302	HUB W/ CUPS, 8 BOLT 10,000 LBS	1
9	171773	NUT, HEX FLANGE 3/4-16 GR5 ZP	8
10	170705	SPINDLE, 3-1/4 IN	1

Standard Caddy Wheel & Tire Assembly

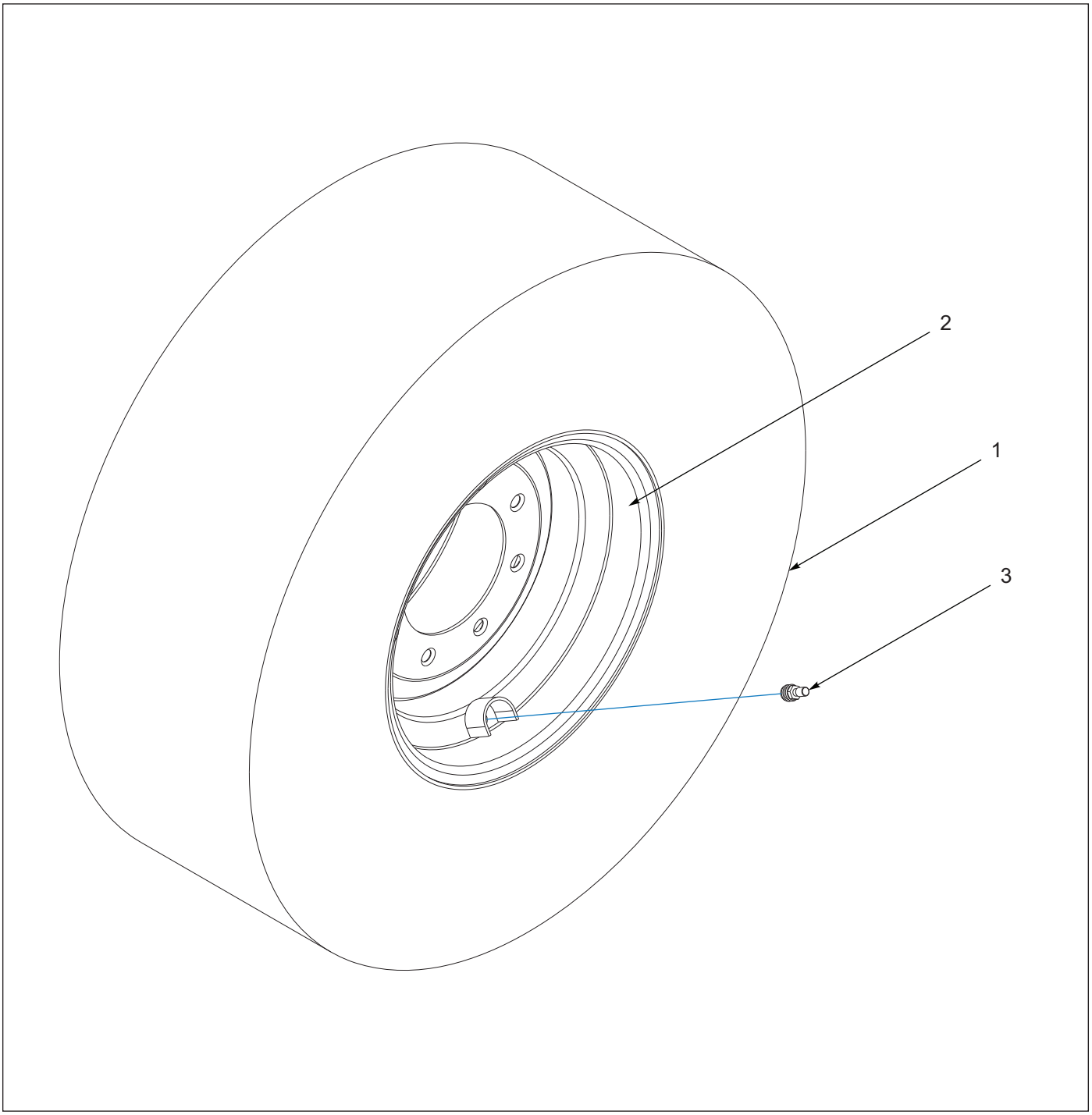

Figure 1-5: Standard Caddy Wheel and Tire Assembly

Standard Caddy Wheel & Tire Assembly

ITEM	PART NUMBER	DESCRIPTION	QTY.
	230909	TIRE ASSY,320/70R15,8 BLT WHL	- -
1	204385	FIRESTONE RADIAL 320/70R15 **(MAX AIR PRESSURE 70 PSI)**	1
2	230908	WHEEL, 15X10, 6.0 PLT, 8 ON 8 **(WHEEL COLOR: OFF-WHITE)**	1
3	TR575	VALVE STEM TUBELESS TIRE	1

Heavy Duty Caddy Wheel & Tire Assembly

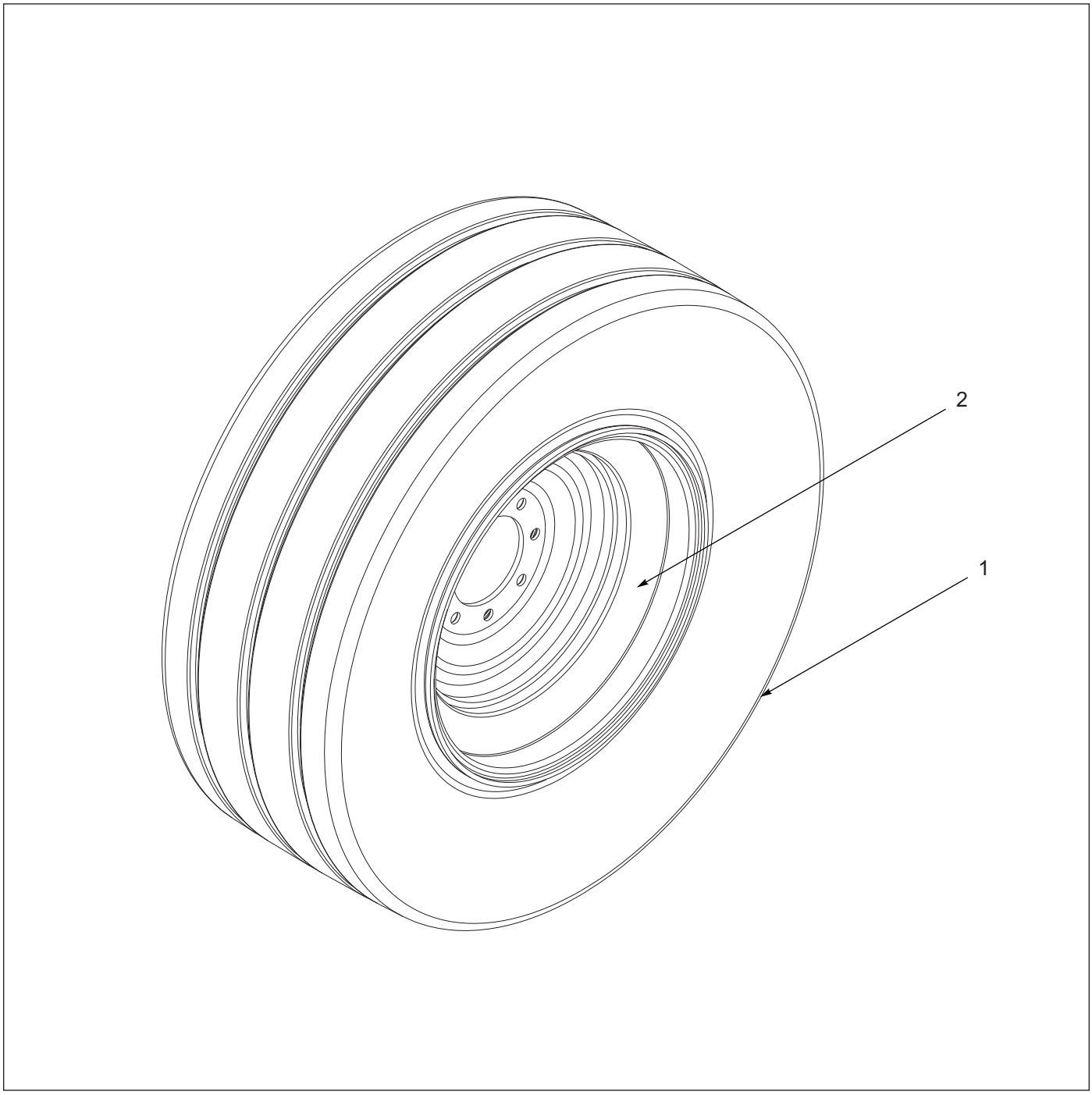

Figure 1-6: Heavy Duty Caddy Wheel and Tire Assembly

Heavy Duty Caddy Wheel & Tire Assembly

ITEM	PART NUMBER	DESCRIPTION	QTY.
	230904	WHEEL,TIRE,385/65R-22.5,8 BOLT	- -
1	224402	TIRE, 385/65R22.5 **(MAX AIR PRESSURE 70 PSI)**	1
2	230903	WHEEL,22.5X11-3/4,6 PLT, 8 ON 8 **(WHEEL COLOR: OFF-WHITE) (WHEEL ASM AIR CAPACITY MUST NOT EXCEED MAX OF 100 PSI)**	1

Electrical

Wiring Components

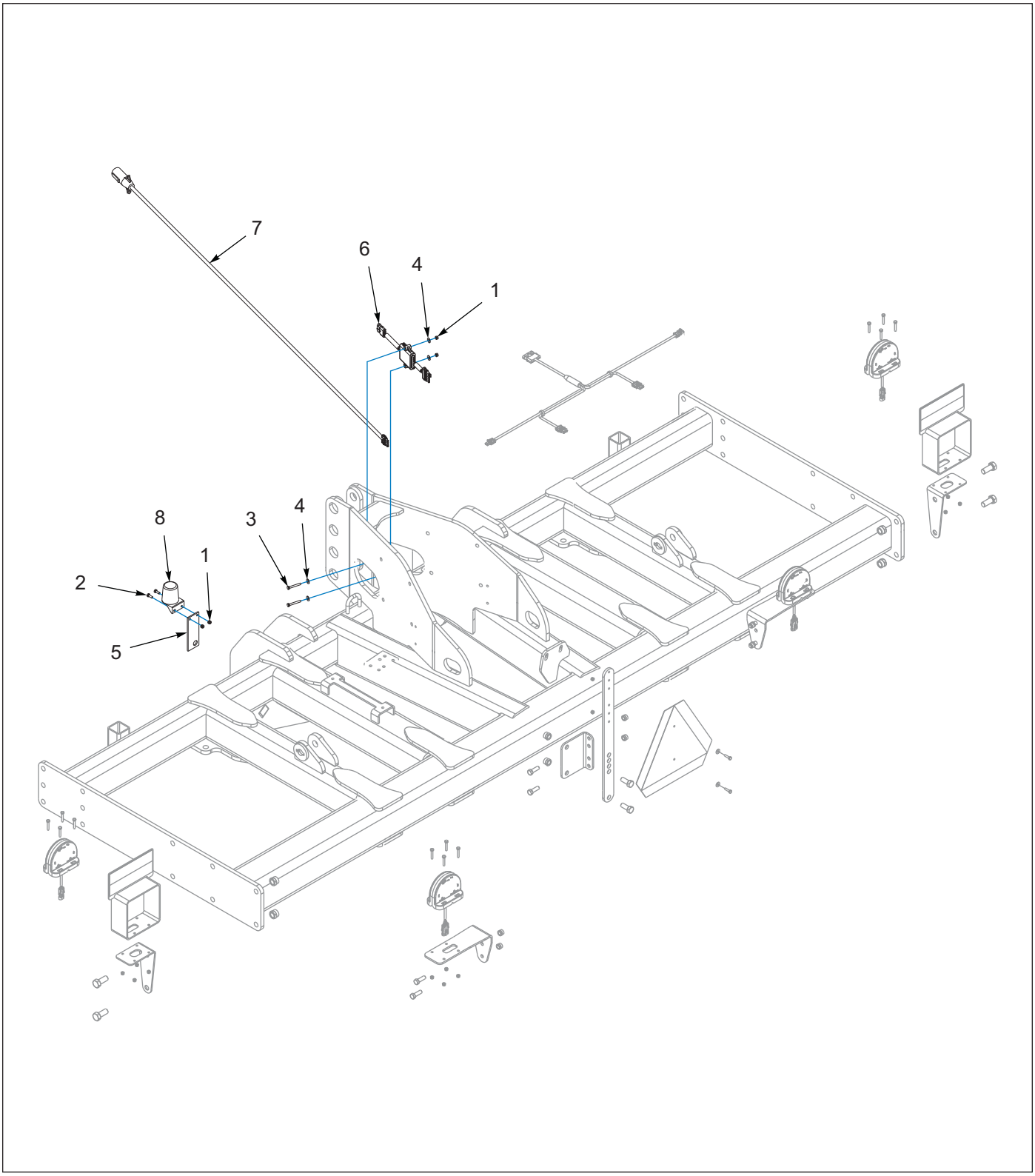

Figure 2-1: Wiring Components

Wiring Components

ITEM	PART NUMBER	DESCRIPTION	QTY.
1	1-512-010005-01	NUT,HEX,SLFLKG GRB 1/4-20	2
2	1-654-010047-04	SCREW,HEX CAP,1/4-20X3/4 GR5	2
3	1-654-010047-10	SCREW,HX CP,1/4-20UNC X2 GR5	2
4	1-861-010032-07	WASHER,FLAT 1/4 ZP	4
5	101404	BRKT, STOR-AWAY HOLDER, 2000	1
6	174437	MODULE, AG FLASHER CONTROL **(SEE PAGE 2-3)**	1
7	178514	HARNESS,7 PIN/4PIN WP, 10' **(SEE PAGE 2-3)**	1
8	2-368-010287	HARNESS, STOR-A-WAY	1

Wiring Diagram

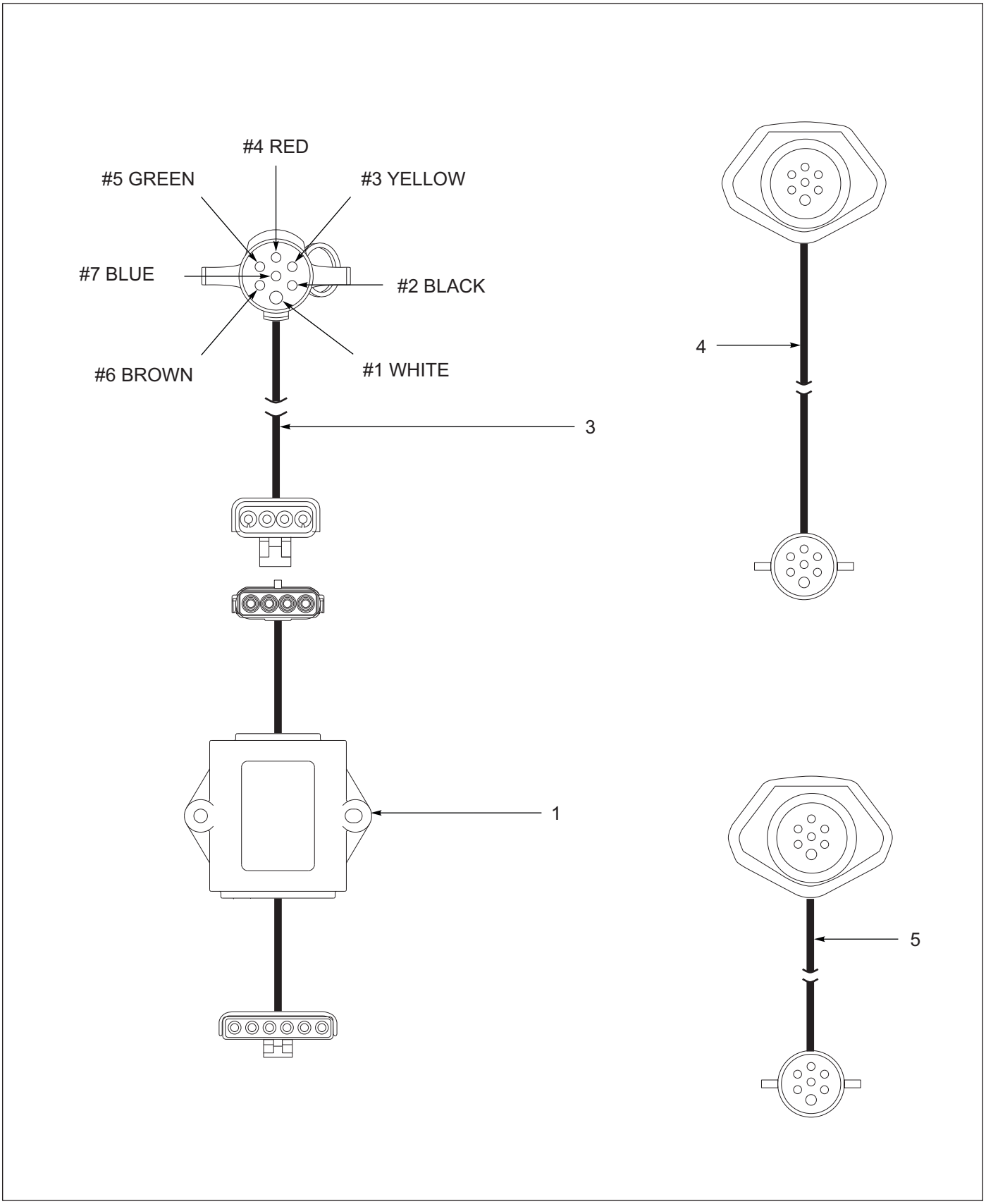

Figure 2-2: Wiring Diagram

Wiring Diagram

ITEM	PART NUMBER	DESCRIPTION	QTY.
1	174437	MODULE, AG FLASHER CONTROL	1
2	175151	HARNESS, LED WARNING LIGHTS	1
3	178514	HARNESS,7 PIN/4PIN WP, 10'	1
4	221797	HARNESS-EXTENSION, 7 WAY X24'	1
5	223319	HARNESS-EXTENSION, 7WAY X 18'	1

Frame

Standard Caddy Bottom and Top Link Assembly

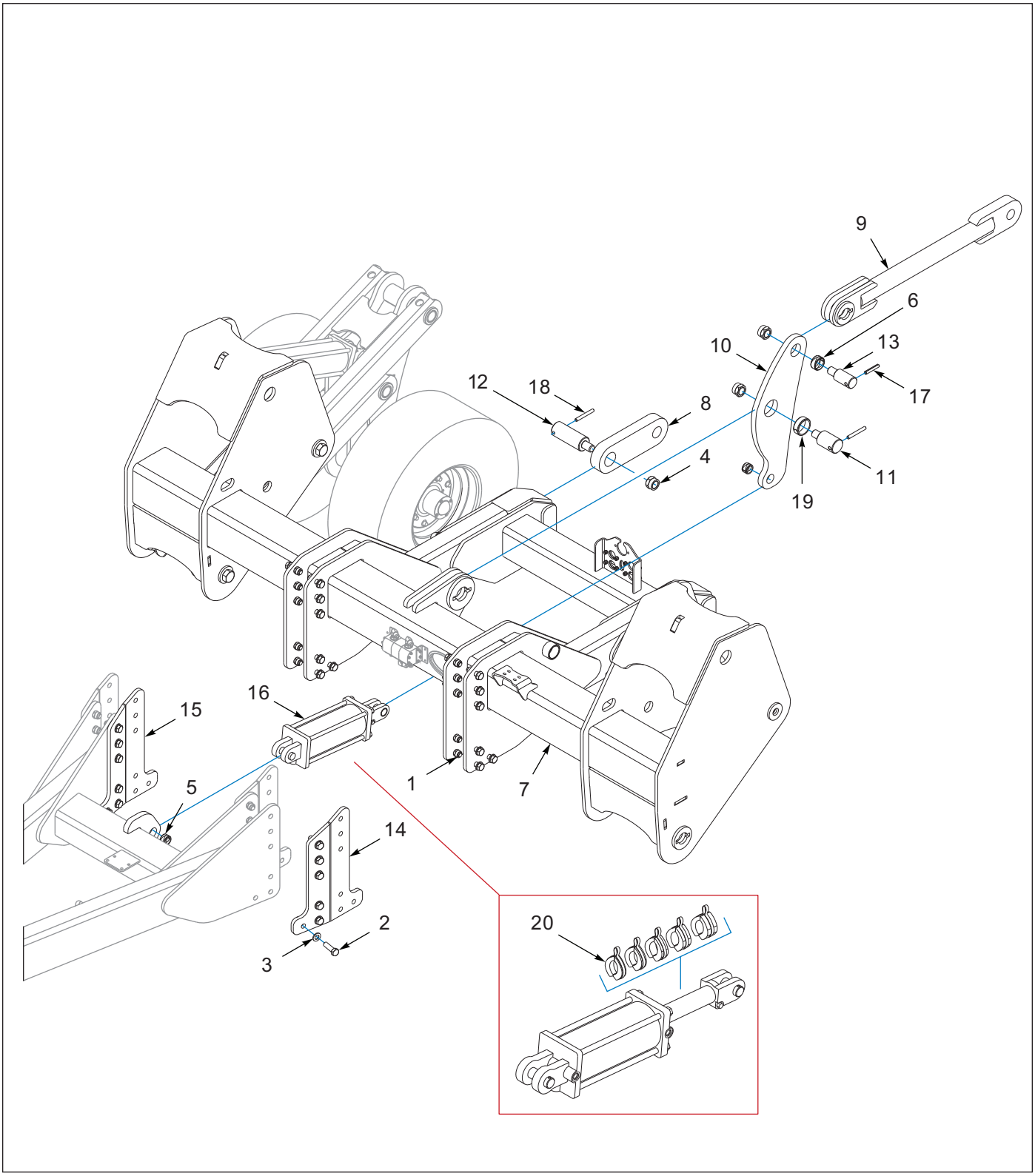

Figure 3-1: Standard Caddy Bottom and Top Link Assembly

Standard Caddy Bottom and Top Links Assembly

ITEM	PART NUMBER	DESCRIPTION	QTY.
1	1-512-010005-15	NUT,HEX,SLFLKG GRB 3/4-10	48
2	1-654-010061-07	SCREW,HX CP 3/4-10UNCX2-1/2G5	48
3	1-861-010032-20	WASHER, FLAT,3/4 N ZP/CD	48
4	101385	NUT,HEX SLFLKG,1-1/4-7 GRB	4
5	2-150-010174	BUSHING,1-5/8X1-1/4X1	4
6	219778	BUSHING, SPRING 2-1/4 X 2 X 1	1
7	221321	FRAME-LIFT, CADDY STD, WLDMNT	1
8	221367	LINK-HITCH, LOWER	2
9	221375	LINK-TOP, CADDY WLDMT **(BEFORE 02/07/2025)** **(ALWAYS REPLACE WITH 253735)**	1
9	253735	LINK-TOP, STANDARD CADDY **(AFTER 02/07/2025)**	1
10	221378	ARM-PIVOT, TOP LINK	1
11	221789	PIN-SHOULDER, 2-1/2 X 2-3/4	1
12	221790	PIN-SHOULDER, 2-1/2 X 5-1/2	2
13	221791	PIN-SHOULDER, 2 X 2-5/8	1
14	223365	PLATE-SEAM, HITCH, LH, STD	2
15	223366	PLATE-SEAM, HITCH, RH, STD	2
16	224457	CYLINDER, HYD 5 X 10, 3000PSI **(SEE PAGE 4-18)**	1
17	5D979	ROLL PIN 1/2 X 3	3
18	8K756	ROLL PIN 1/2 x 4	3
19	9-150-010136	BUSHING 30DX2-1/2IDX1	1
20	209432	KIT, ø2 ROD CYL DEPTH STOP	1

Heavy Duty Caddy Bottom and Top Link Assembly

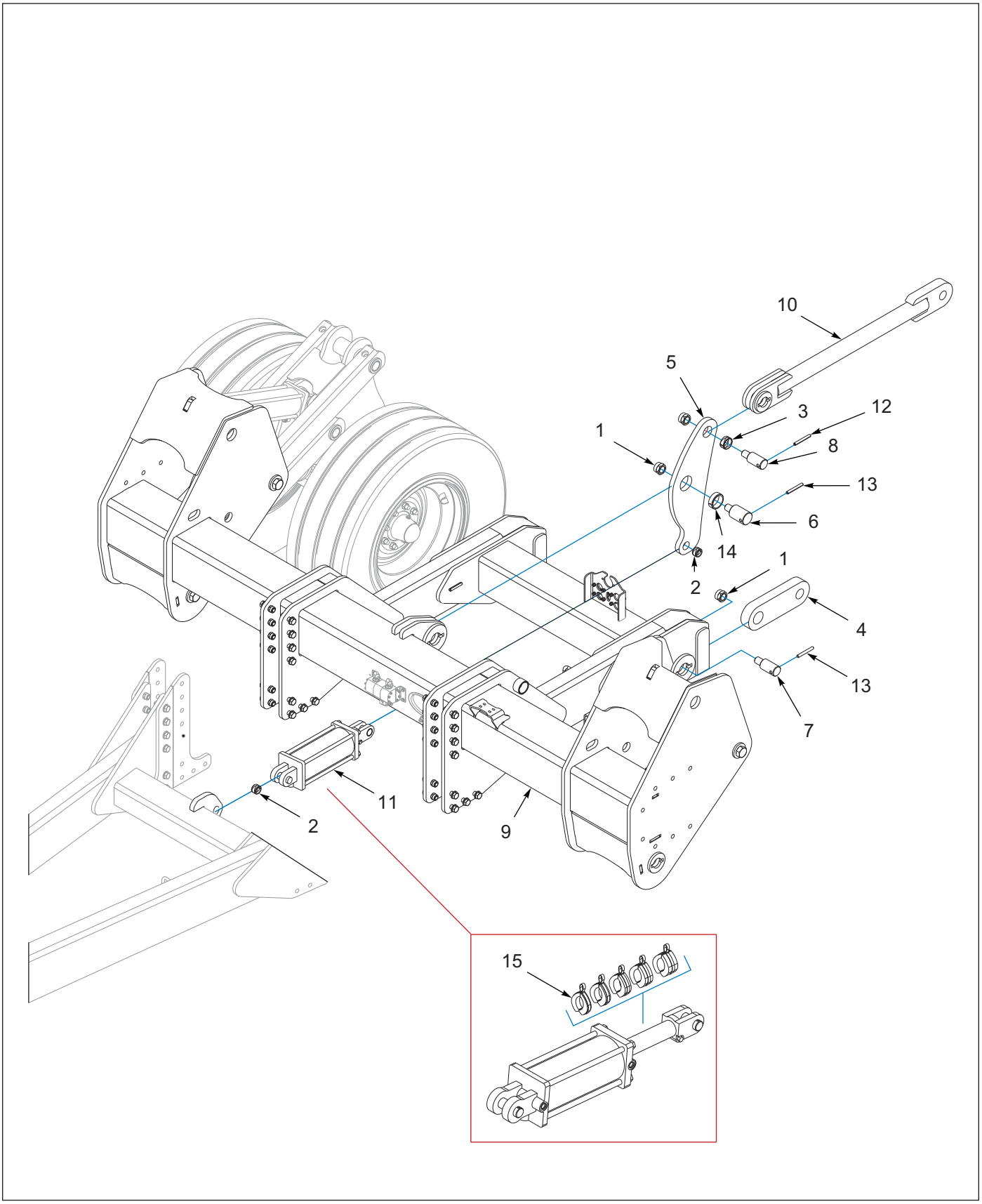

Figure 3-2: Heavy Duty Caddy Bottom and Top Link Assembly

Heavy Duty Caddy Bottom and Top Links Assembly

ITEM	PART NUMBER	DESCRIPTION	QTY.
1	101385	NUT,HEX SLFLKG,1-1/4-7 GRB	4
2	2-150-010174	BUSHING,1-5/8X1-1/4X1	2
3	219778	BUSHING, SPRING 2-1/4 X 2 X 1	1
4	221367	LINK-HITCH, LOWER	2
5	221378	ARM-PIVOT, TOP LINK	1
6	221789	PIN-SHOULDER, 2-1/2 X 2-3/4	1
7	221790	PIN-SHOULDER, 2-1/2 X 5-1/2	2
8	221791	PIN-SHOULDER, 2 X 2-5/8	1
9	223321	FRAME-LIFT, CADDY STD, WLDMNT	1
10	224420	LINK-TOP, CADDY, HD WLDMT	1
11	224457	CYLINDER, HYD 5 X 10, 3000PSI **(SEE PAGE 4-18)**	1
12	5D979	ROLL PIN 1/2 X 3	1
13	8K756	ROLL PIN 1/2 x 4	3
14	9-150-010136	BUSHING 30DX2-1/2IDX1	1
15	209432	KIT, ø2 ROD CYL DEPTH STOP	1

Standard Axle Lift Assembly

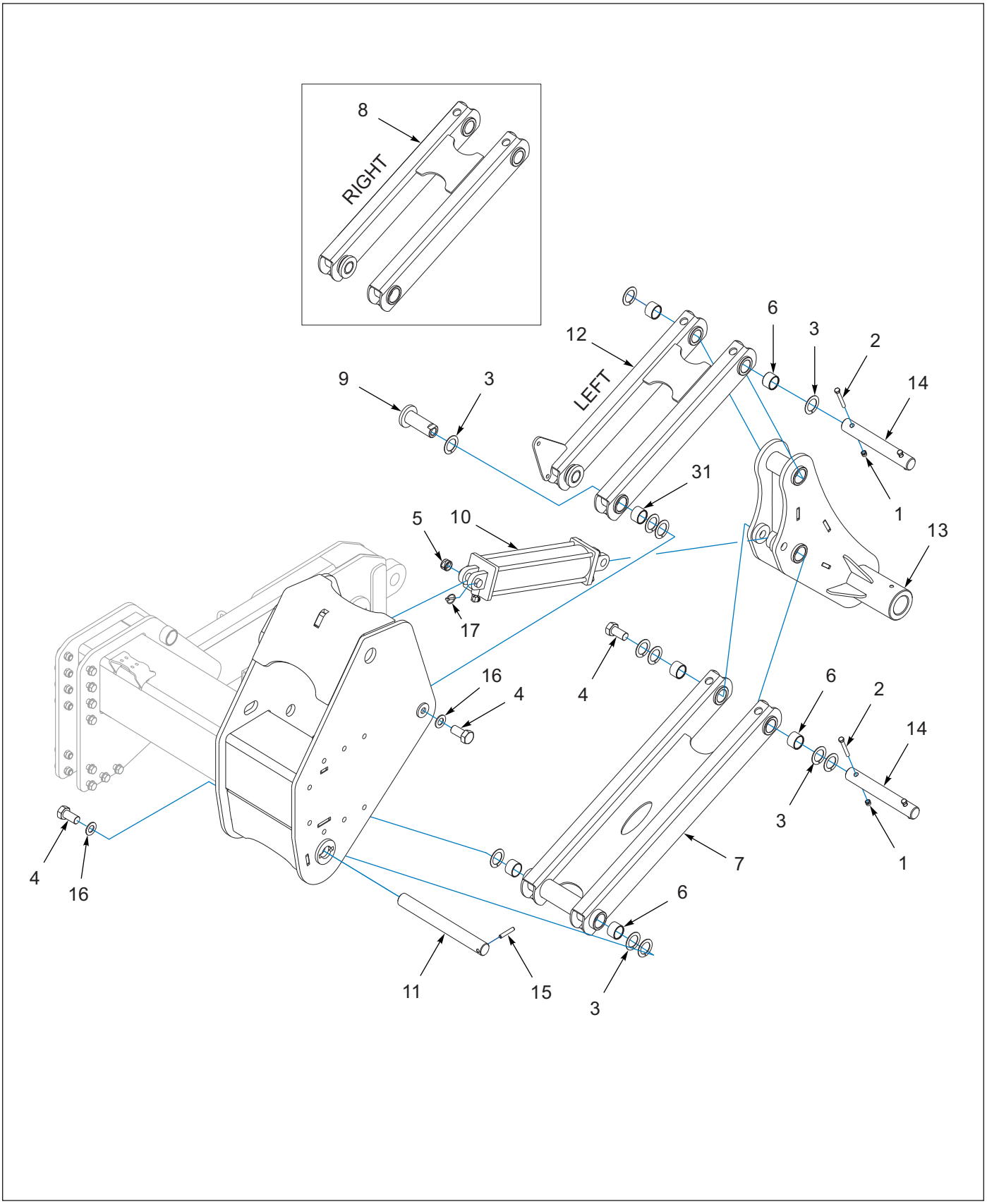

Figure 3-3: Standard Axle Lift Assembly

Standard Axle Lift Assembly

ITEM	PART NUMBER	DESCRIPTION	QTY.
1	1-512-010005-09	NUT,HEX,SLFLKG, 1/2-13 GRB	4
2	1-654-010055-12	SCREW,CP,HX .50-13UNCX3.75 GR5	4
3	164472	WASHER, THRUST 2	20
4	179205	SCREW HX CAP 1-1/4-7X2-1/2GR8	6
5	2-150-010174	BUSHING,1-5/8X1-1/4X1	2
6	215458	BRG, 2-1/4 X 2 X 1-1/2L W/ LIP	8
7	221337	LINK-LIFT, PARALLEL, WLDMT	2
8	221338	LINK-LIFT, UPPER, WLDMT	1
9	221350	PIN-PIVOT, UPPER LINK WLDMT	2
10	227296	CLYINDER-HYD, 4 X 20, 3000 PSI **(AFTER 03/2021)** **(REPLACE VENDOR PIN WITH ITEM 17) (SEE PAGE 4-16)**	2
10	221792	CYLINDER-HYDRAULIC,4-1/2X20ASM **(BEFORE 03/2021)** **(SEE PAGE 4-17)**	2
11	221934	PIN-PIVOT, 2 X 17-3/4	2
12	221937	LINK-LIFT, UPPER, LH, WLDMT	1
13	223337	MOUNT-SPINDLE, WLDMT	2
14	224409	PIN-LINK, AXLE	4
15	5D979	ROLL PIN 1/2 X 3	2
16	1-861-010032-29	WASHER, FLAT 1-1/4 W ZP/CD	6
17	134912	PIN, LYNCH 1/4 X 1-1/4 **(REPLACES CYLINDER PIN PROVIDED BY VENDOR)**	2

Heavy Duty Axle Lift Assembly

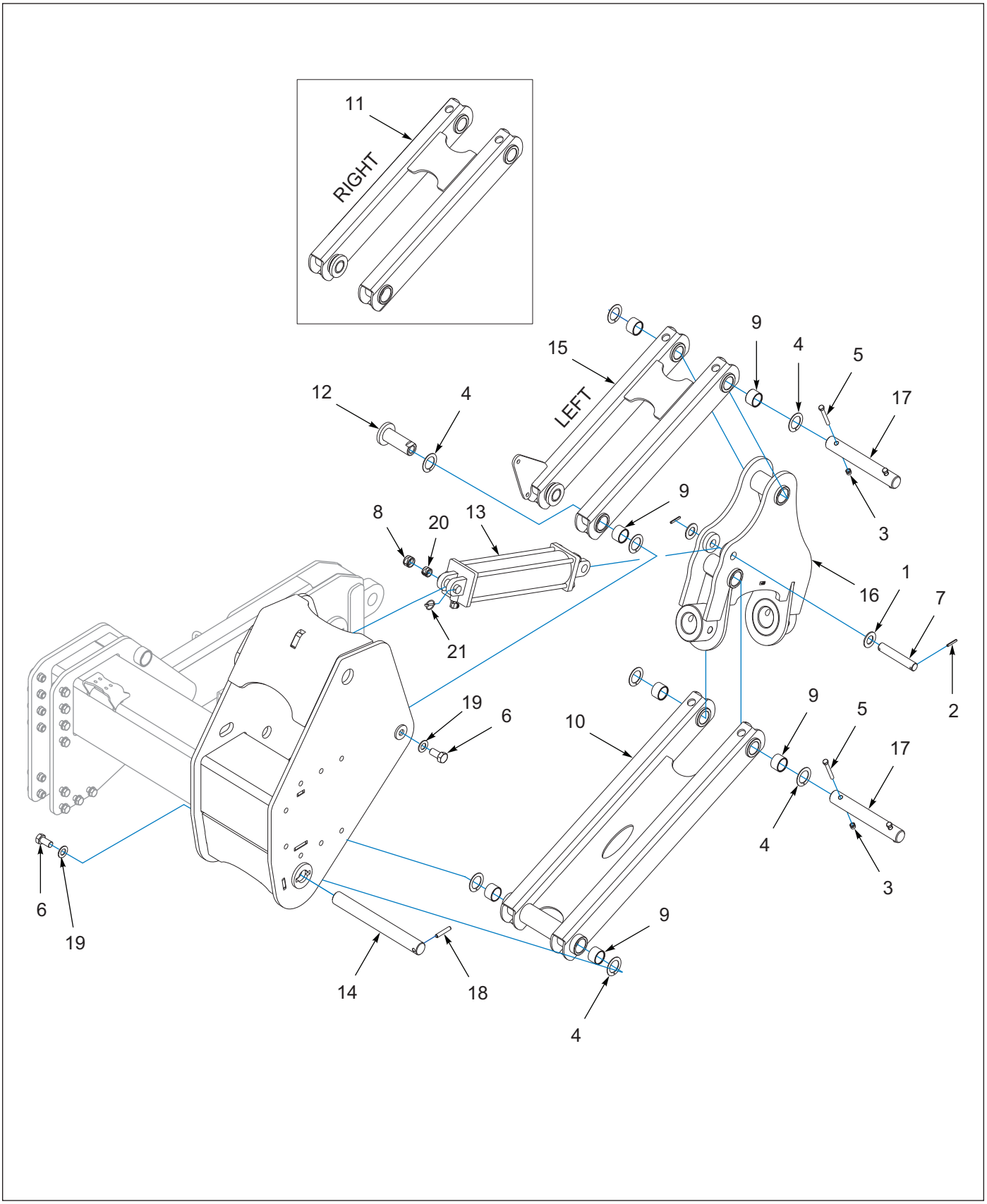

Figure 3-4: Heavy Duty Axle Lift Assembly

Heavy Duty Axle Lift Assembly

ITEM	PART NUMBER	DESCRIPTION	QTY.
1	116100	WASHER 1-1/4 NAR FL ZP/CD	4
2	147072	PIN, SPRING SLOTTED 5/16 X 2	4
3	1-512-010005-09	NUT,HEX,SLFLKG, 1/2-13 GRB	8
4	164472	WASHER, THRUST 2	20
5	1-654-010055-12	SCREW,CP,HX .50-13UNCX3.75 GR5	8
6	179205	SCREW HX CAP 1-1/4-7X2-1/2GR8	6
7	1P675	PIN, 1.25 X 7.5 H2	2
8	2-150-010174	BUSHING,1-5/8X1-1/4X1	2
9	215458	BRG, 2-1/4 X 2 X 1-1/2L W/ LIP	16
10	221337	LINK-LIFT, PARALLEL, WLDMT	2
11	221338	LINK-LIFT, UPPER, RH, WLDMT	1
12	221350	PIN-PIVOT, UPPER LINK WLDMT	4
13	221792	CYLINDER-HYDRAULIC,4-1/2X20ASM **(SEE PAGE 4-17)** **(REPLACE VENDOR PIN WITH ITEM 21)**	2
14	221934	PIN-PIVOT, 2 X 17-3/4	2
15	221937	LINK-LIFT, UPPER, LH, WLDMT	1
16	223340	MOUNT-AXLE, TOGGLE, WLDMT	2
17	224409	PIN-LINK, AXLE	4
18	5D979	ROLL PIN 1/2 X 3	2
19	1-861-010032-29	WASHER, FLAT 1-1/4 W ZP/CD	6
20	192890	BUSHING 1-3/8ODX1 IDX1 STEEL	2
21	134912	PIN, LYNCH 1/4 X 1-1/4 **(REPLACES CYLINDER PIN PROVIDED BY VENDOR)**	2

Standard Caddy Depth Control Assembly

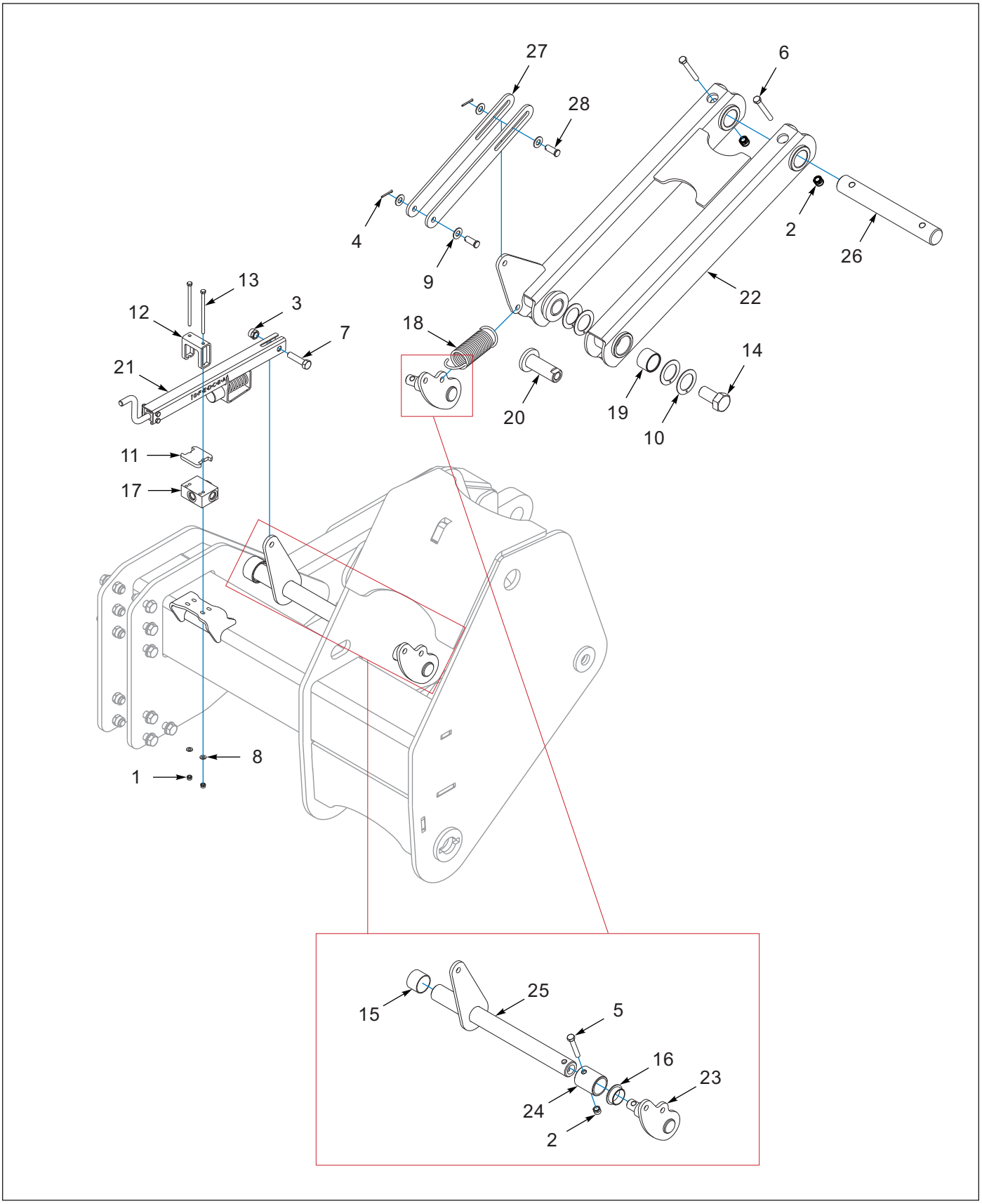

Figure 3-5: Standard Caddy Depth Control Assembly

Standard Caddy Depth Control Assembly

ITEM	PART NUMBER	DESCRIPTION	QTY.
1	1-512-010005-03	NUT HEX SLFLKG GRB 5/16-18	2
2	1-512-010005-09	NUT,HEX,SLFLKG, 1/2-13 GRB	11
3	1-512-010005-13	NUT,HEX SLFLKG GRB 5/8-11	1
4	1-557-010362-40	PIN, COTTER 5/32X1-1/4	2
5	1-654-010055-09	SCREW,HX CP,1/2-13UNCX3 GR5	1
6	1-654-010055-12	SCREW,CP,HX .50-13UNCX3.75 GR5	6
7	1-654-010059-07	SCREW HX CP 5/8-11UNCX2-1/2G5	1
8	1-861-010032-08	WASHER,FLAT 5/16 N ZP	2
9	1-861-010032-18	WASHER, FLAT 5/8 N ZP/CD	4
10	164472	WASHER, THRUST 2	4
11	165257	PAD, SLIDE	1
12	195579	GUIDE, DEPTH STOP	1
13	171556	SCREW,HEX CP,5/16-18UNCX5-1/2	2
14	179205	SCREW HX CAP 1-1/4-7X2-1/2GR8	6
15	183815	BUSHING, 2-1/4 X 2 X 1-1/2 L	1
16	200999	BEARING,FLANGE 1-3/4	1
17	203467	VALVE-LIMIT, STROKE	1
18	210764	SPRING-EXT,7.5 X 2.4, 49 LB	1
19	215458	BRG, 2-1/4 X 2 X 1-1/2L W/ LIP	2
20	221350	PIN-PIVOT, UPPER LINK WLDMT	2
21	221382	TUBE-DEPTH CONTROL, ASSY **(SEE PAGE 3-13)**	1
22	221937	LINK-LIFT, UPPER, LH, WLDMT	1
23	223350	LEVER-DEPTH CONTROL WLDMT	1
24	223352	TUBE-KEEPER	1
25	223369	LEVER-CONTROL, DEPTH, WLDMT	1
26	224409	PIN-LINK, AXLE	2
27	224423	LINK-CONTROL, DEPTH	2
28	3K287	PIN-CLEVIS, 5/8 X 1 1/4	2

Heavy Duty Caddy Depth Control Assembly

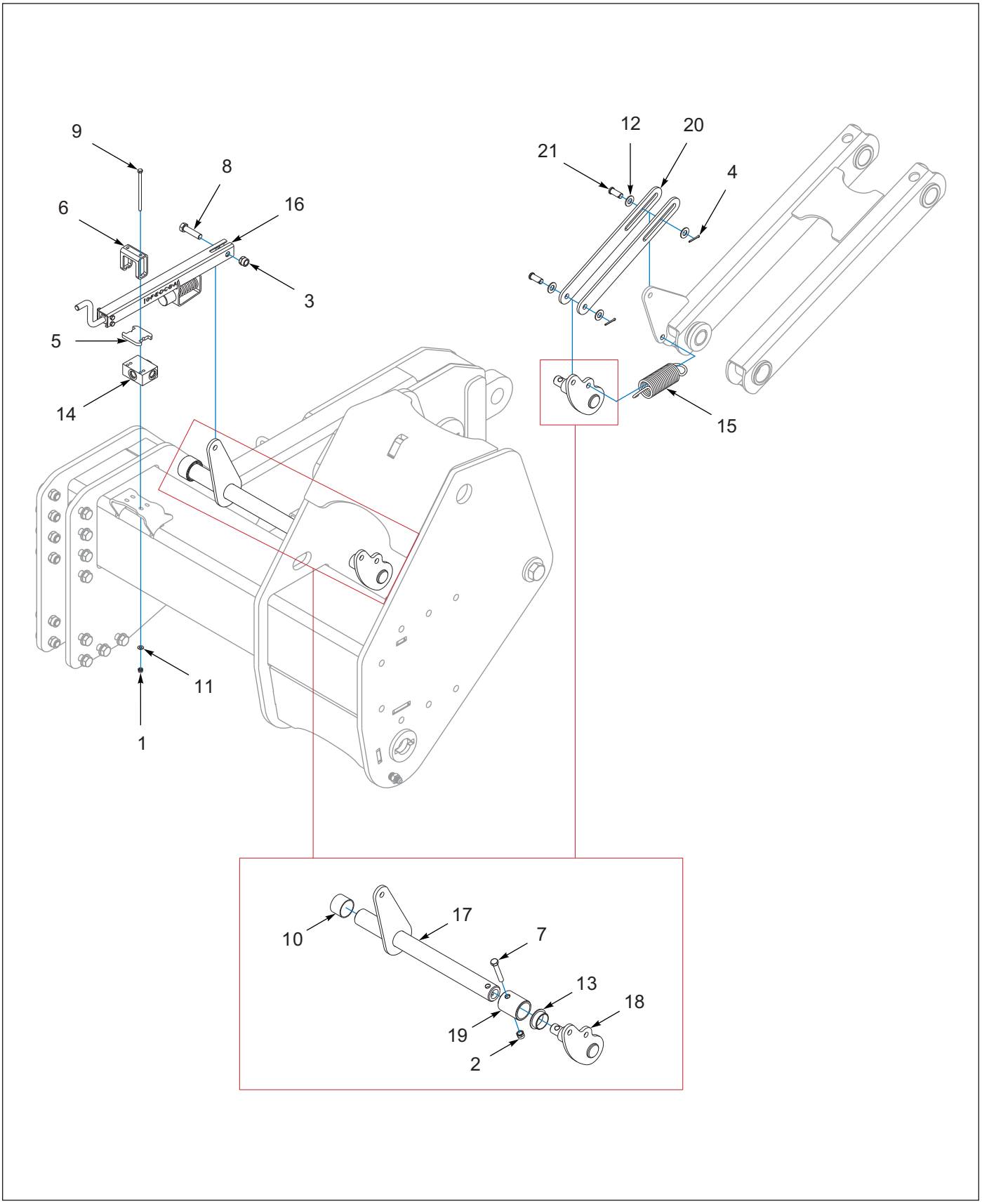

Figure 3-6: Heavy Duty Caddy Depth Control Assembly

Heavy Duty Caddy Depth Control Assembly

ITEM	PART NUMBER	DESCRIPTION	QTY.
1	1-512-010005-03	NUT HEX SLFLKG GRB 5/16-18	2
2	1-512-010005-09	NUT,HEX,SLFLKG, 1/2-13 GRB	1
3	1-512-010005-13	NUT,HEX SLFLKG GRB 5/8-11	1
4	1-557-010362-40	PIN, COTTER 5/32X1-1/4	2
5	165257	PAD, SLIDE	1
6	195579	GUIDE, DEPTH STOP	1
7	1-654-010055-09	SCREW,HX CP,1/2-13UNCX3 GR5	1
8	1-654-010059-07	SCREW HX CP 5/8-11UNCX2-1/2G5	1
9	171556	SCREW,HEX CP,5/16-18UNCX5-1/2	2
10	183815	BUSHING, 2-1/4 X 2 X 1-1/2 L	1
11	1-861-010032-08	WASHER,FLAT 5/16 N ZP	2
12	1-861-010032-18	WASHER, FLAT 5/8 N ZP/CD	4
13	200999	BEARING,FLANGE 1-3/4	1
14	203467	VALVE-LIMIT, STROKE	1
15	210764	SPRING-EXT,7.5 X 2.4, 49 LB	1
16	221382	TUBE-DEPTH CONTROL, ASSEMBLY **(SEE PAGE 3-13)**	1
17	223348	LEVER-CONTROL, DEPTH, WLDMT	1
18	223350	LEVER-DEPTH CONTROL WLDMT	1
19	223352	TUBE-KEEPER	1
20	224423	LINK-CONTROL, DEPTH	2
21	3K287	CLEVIS PIN	2

Depth Control Tube Assembly

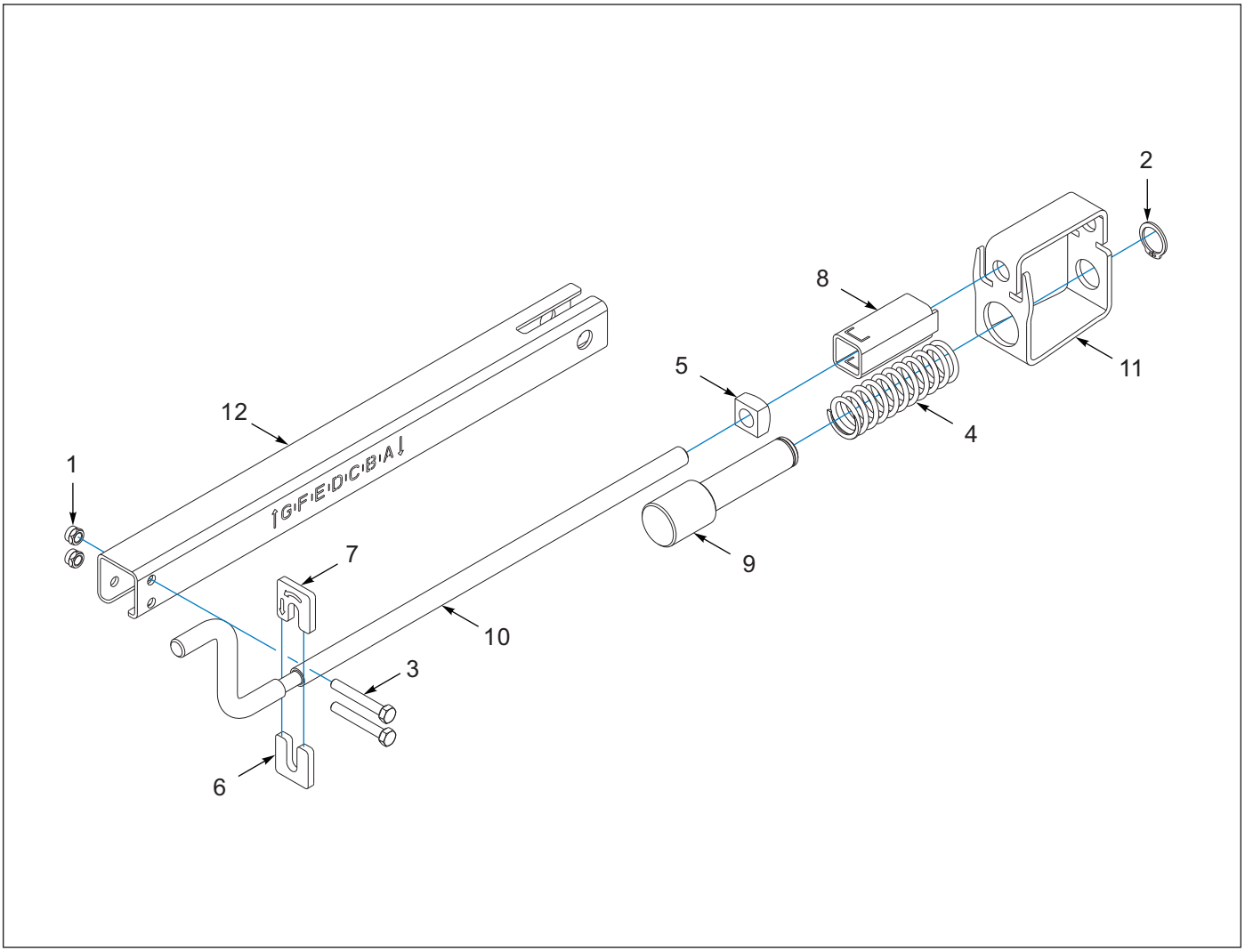

Figure 3-7: Depth Control Tube Assembly

Depth Control Tube Assembly

ITEM	PART NUMBER	DESCRIPTION	QTY.
	221382	TUBE-DEPTH CONTROL, ASSEMBLY	- -
1	1-512-010005-03	NUT HEX SLFLKG GRB 5/16-18	2
2	1-630-010021-03	RING, RETAINING 1.0 HD	1
3	108628	SCREW HX CP 5/16-18UNCX2-1/4	2
4	122917	SPRING COMPRESSION,4-1/2 MONO	1
5	144048	NUT, SQ 5/8-11 GR5	1
6	165259	STOP, HANDLE LON	1
7	165260	STOP, HANDLE SHORT	1
8	166717	SQ TUBE, FLOATING	1
9	174708	PIN, DEPTH STOP	1
10	182288	HANDLE-DEPTH STOP	1
11	182289	STOP-DEPTH	1
12	221383	TUBE-DEPTH STOP, CADDY	1

Table provided for general use.

NOTES:

Standard Caddy Hitch Assembly

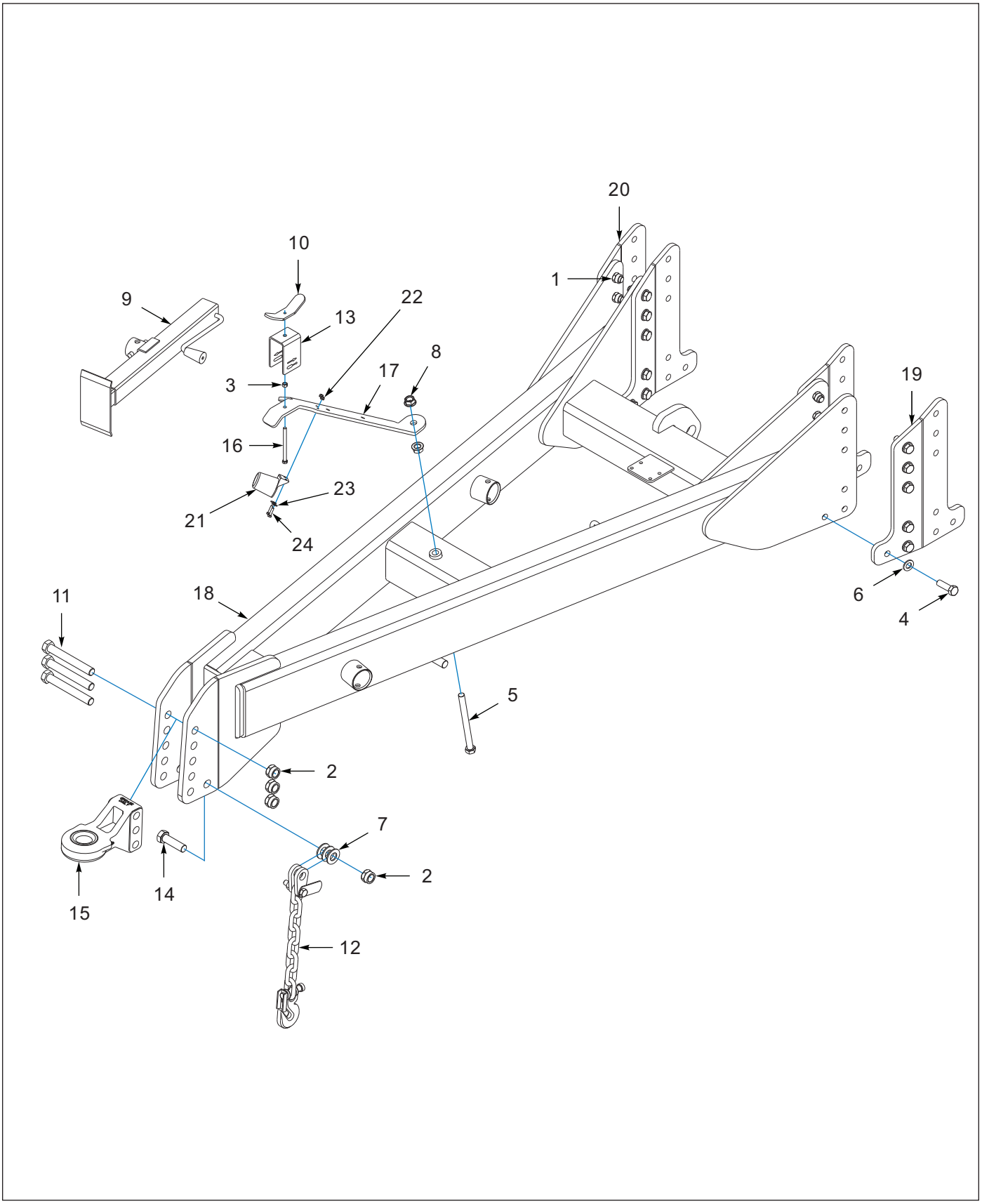

Figure 3-8: Standard Caddy Hitch Assembly

Standard Caddy Hitch Assembly

ITEM	PART NUMBER	DESCRIPTION	QTY.
1	1-512-010005-15	NUT,HEX,SLFLKG GRB 3/4-10	48
2	1-512-010005-19	NUT 1-8 HEX SLF-LOCKING GRB	4
3	1-512-010007-07	NUT, HEX 3/8-16 GR2 ZP	1
4	1-654-010061-07	SCREW, HEX, 3/4-10UNC X2-1/2 GR5	49
5	1-654-010061-23	SCREW,HEX CAP 3/4-10UNCX9 GR5	1
6	1-861-010032-20	WASHER, FLAT,3/4 N ZP/CD	48
7	1-861-010032-24	WASHER FL 1IN NARROW ZP	3
8	103841	NUT,FLG,LNK,SERRATED 3/4-10UNC	2
9	140647	JACK, SIDE WIND 7000/8000 LB	1
10	141249	WING NUT, HOSE HOLDER	1
11	153696	BOLT, HITCH CLEVIS	3
12	156950	SAFETY CHAIN, 41,000 LB	1
13	177398	CLAMP, HOSE HOLDER, LONG	1
14	172579	SCREW, HEX, 1/8 UNC X 301/2GR8	1
15	189451	HITCH, BALL CAT IV 3-HOLE	1
16	196754	SCREW,HH 3/8-16X5,GR5,FUL THRD	1
17	200829	BRACKET, HOSE HOLDER	1
18	223363	HITCH-CADDY,STD,WLDMT BLUE	1
19	223365	PLATE-SEAM, HITCH, LH, STD	2
20	223366	PLATE-SEAM, HITCH, RH, STD	2
21	2-368-010287	HARNESS, STOR-A-WAY	1
22	1-512-010005-01	NUT,HEX,SLFLKG GRB 1/4-20	2
23	1-861-010032-07	WASHER,FLAT 1/4 ZP	2
24	1-654-010047-06	SCREW,HX CP 1/4-20UNCZ1 GR5	2

Heavy Duty Caddy Hitch Assembly

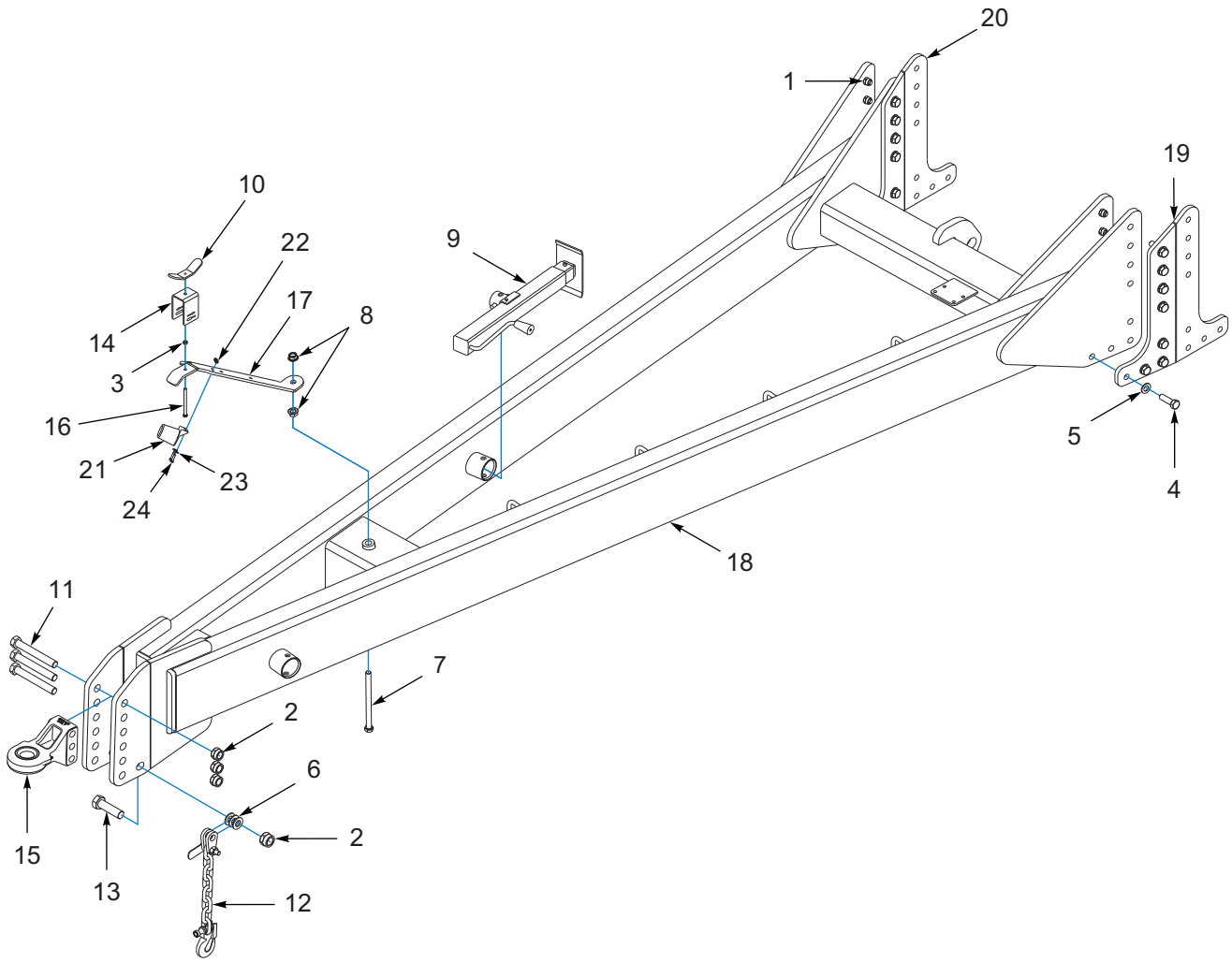

Figure 3-9: Heavy Duty Caddy Hitch Assembly

Heavy Duty Caddy Hitch Assembly

ITEM	PART NUMBER	DESCRIPTION	QTY.
1	1-512-010005-15	NUT,HEX,SLFLKG GRB 3/4-10	64
2	1-512-010005-19	NUT 1-8 HEX SLF-LOCKING GRB	4
3	1-512-010007-07	NUT, HEX 3/8-16 GR2 ZP	1
4	1-654-010061-07	SCREW,HX CP 3/4-10UNCX2-1/2G5	64
5	1-861-010032-20	WASHER, FLAT,3/4 N ZP/CD	64
6	1-861-010032-24	WASHER FL 1IN NARROW ZP	3
7	100809	SCREW,HEX CAP,3/4-10X11-1/2G5	1
8	103841	NUT,FLG,LNK,SERRATED 3/4-10UNC	2
9	140647	JACK, SIDE WIND 7000/8000 LB	1
10	141249	WING NUT, HOSE HOLDER	1
11	153696	BOLT, HITCH CLEVIS	3
12	156950	SAFETY CHAIN, 41,000 LB	1
13	172579	SCREW HEX CAP 1-8UNCX3.5 GR8	1
14	177397	PLATE-HOSE HOLDER MOUNT	1
15	189451	HITCH, BALL CAT IV 3-HOLE	1
16	196754	SCREW,HH 3/8-16X5,GR5,FUL THRD	1
17	200829	BRACKET, HOSE HOLDER	1
18	224405	HITCH-CADDY, HD, WLDMT	1
19	224407	PLATE-SEAM, HITCH, LH, HD	2
20	224408	PLATE-SEAM, HITCH, RH, HD	2
21	2-368-010287	HARNESS, STOR-A-WAY	1
22	1-512-010005-01	NUT,HEX,SLFLKG GRB 1/4-20	2
23	1-861-010032-07	WASHER,FLAT 1/4 ZP	2
24	1-654-010047-06	SCREW,HX CP 1/4-20UNCZ1 GR5	2

Lockout Assembly

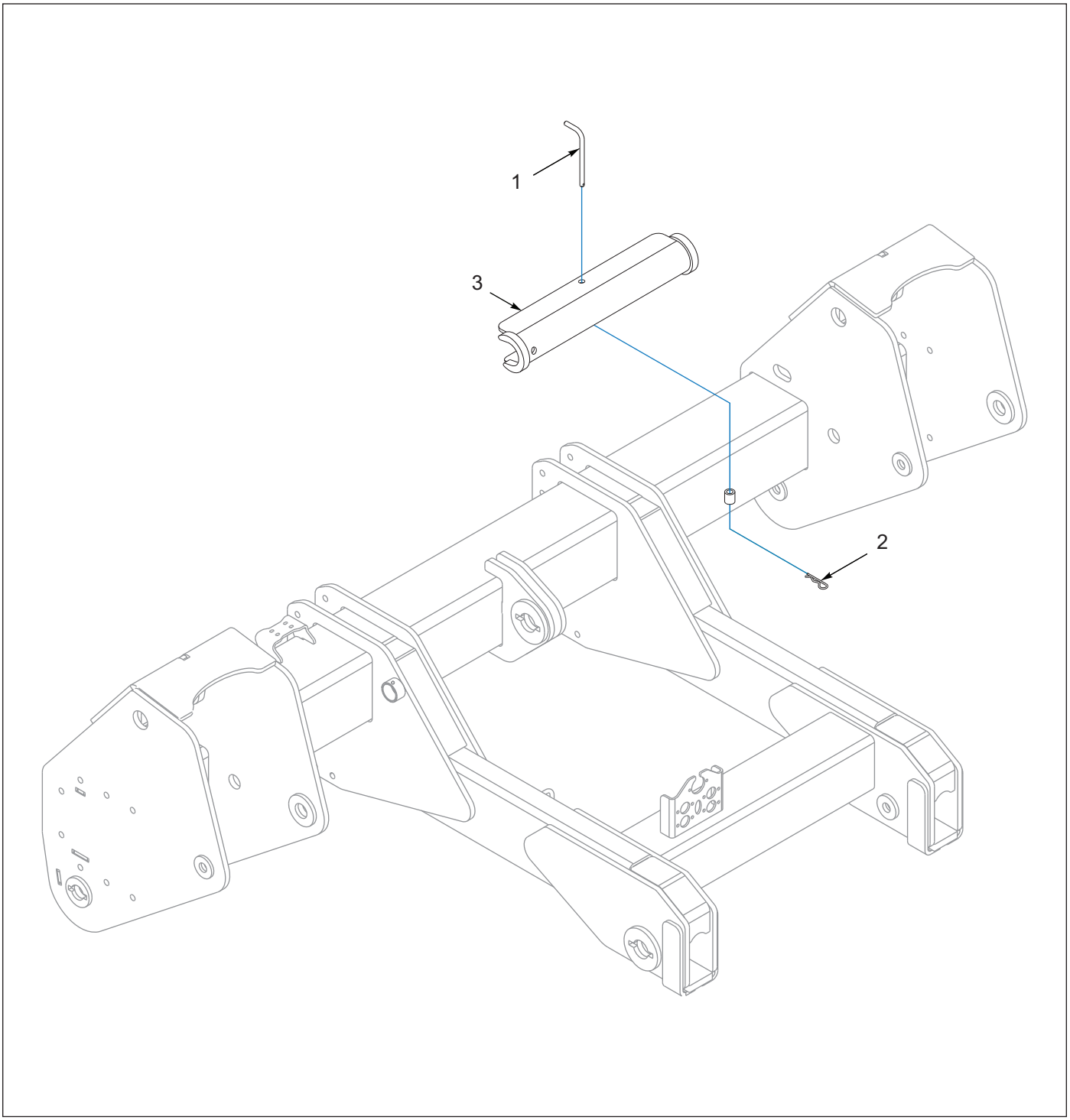

Figure 3-10: Lockout Assembly

Lockout Assembly

ITEM	PART NUMBER	DESCRIPTION	QTY.
1	104358	L PIN,CYL STOP	2
2	1-557-010403	HAIRPIN 1/8	2
3	221936	LOCKOUT, 2" ROD X 20 WLDMT	2

Manual Holder and Hydraulic Couplers

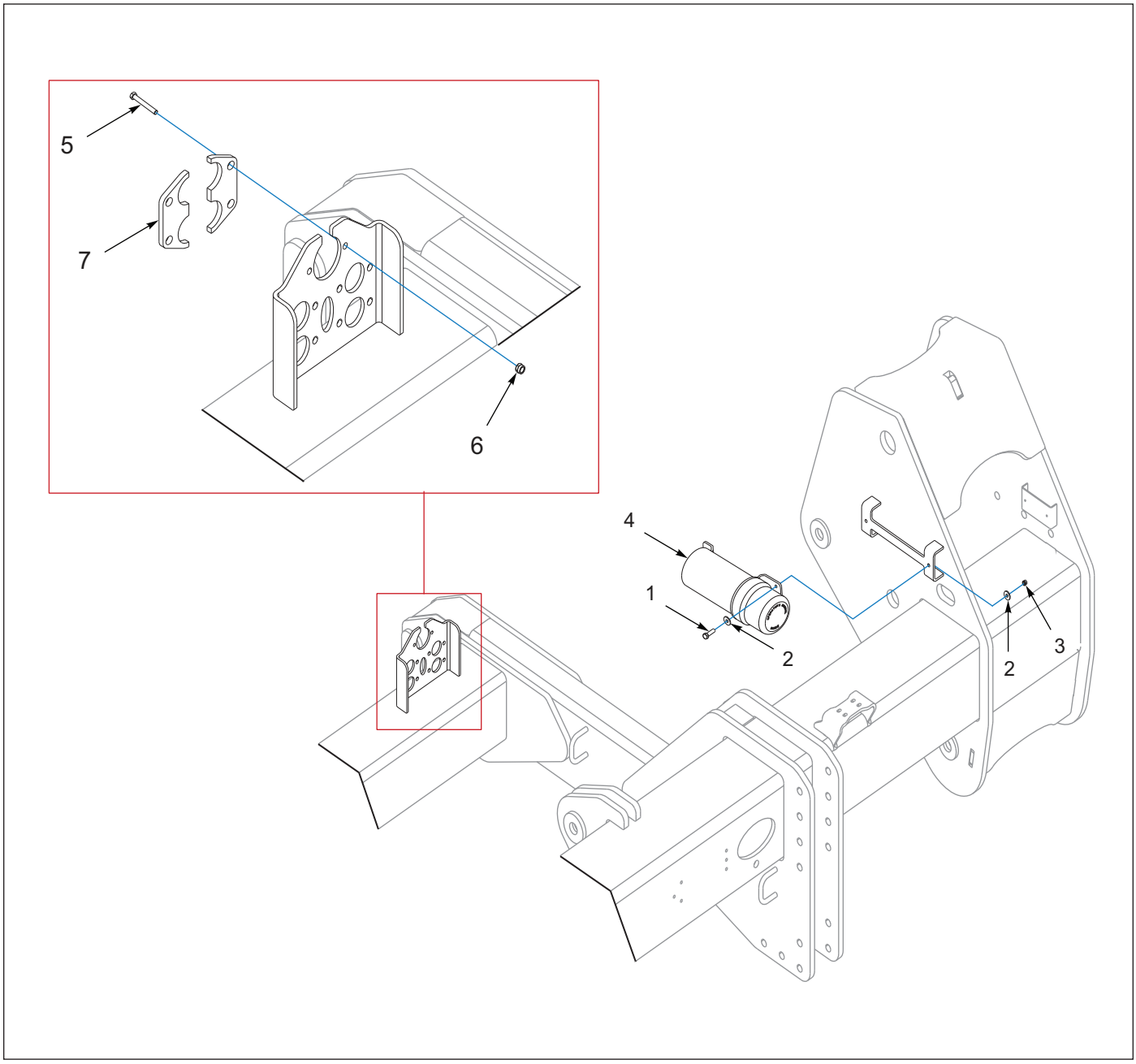

Figure 3-11: Manual Holder and Hydraulic Couplers

Manual Holder and Hydraulic Couplers

ITEM	PART NUMBER	DESCRIPTION	QTY.
1	1-654-010047-06	SCREW,HX CP 1/4-20UNCX1 GR5	2
2	1-861-010032-07	WASHER,FLAT 1/4 ZP	4
3	1-512-010005-01	NUT,HEX,SLFLKG GRB 1/4-20	2
4	150076	MANUAL TUBE (4-1/4"ID)	1
5	1-654-010051-05	SCREW,HEX CAP 3/8-16UNCX1 GR5	4
6	1-512-010005-05	NUT, HEX, SLFLKG GRB 3/8-16	4
7	222001	MOUNT, COUPLERS	4

Hydraulics

Hydraulic Kit (AFTER 09/2025)

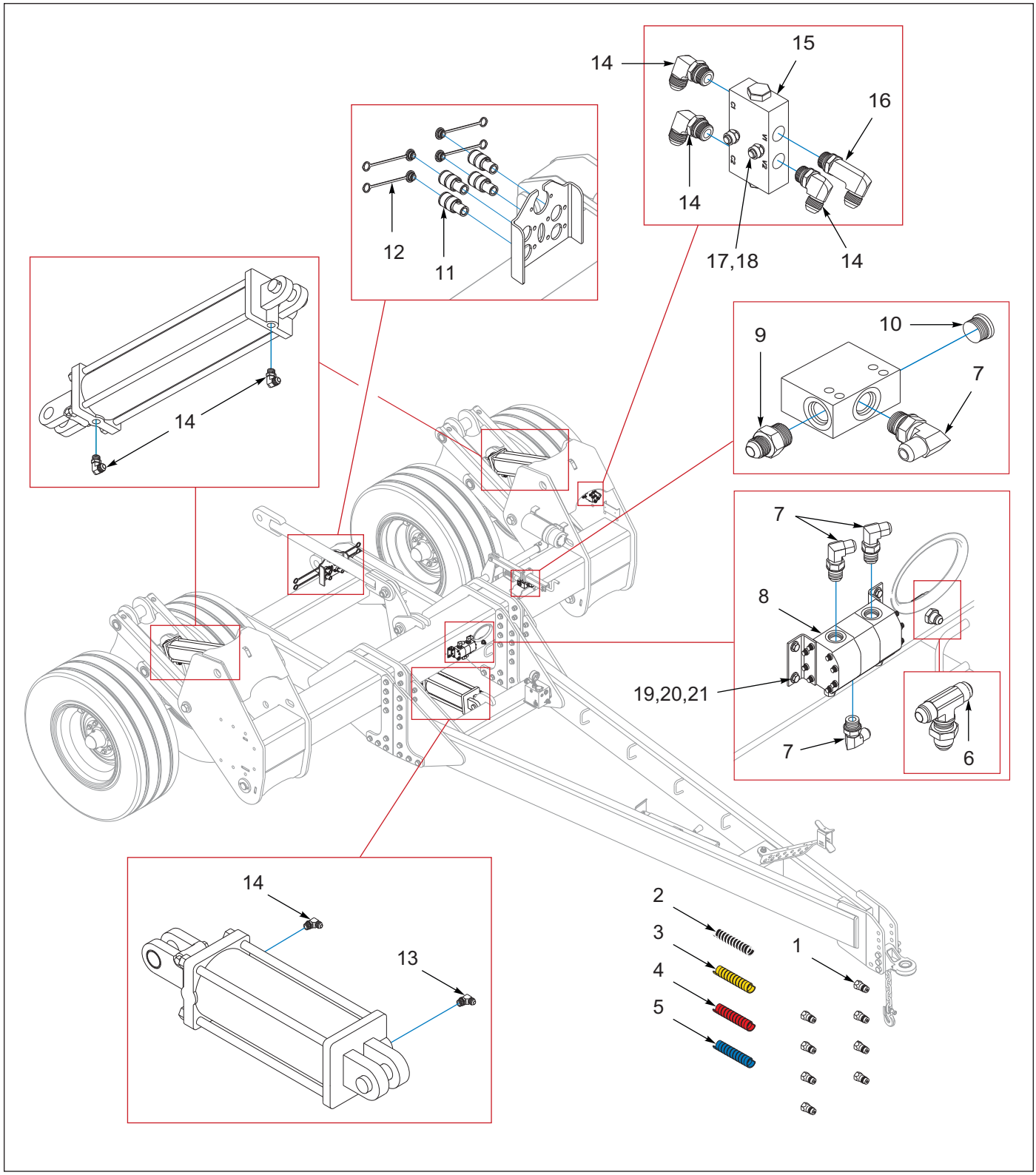

Figure 4-1: Hydraulic Kit (AFTER 09/2025)

Hydraulic Kit (AFTER 09/2025)

ITEM	PART NUMBER	DESCRIPTION	QTY.
	221794	KIT-HYDRAULIC CADDY	1
1	141828	COUPLER,MALE 3/4-16 O-RING	8
2	155530	HOSE WRAP, BLACK 1" ID X 8"	1
3	155529	HOSE WRAP, YELLOW 1" ID X 8"	1
4	172973	HOSE WRAP, RED	1
5	155528	HOSE WRAP, BLUE 1" ID X 8"	1
6	221953	BULKHEAD TEE, #8 JIC	1
7	2062-10-8S	ADAPTER,90, #10 O-RING-TUBE	4
8	221788	DIVIDER-FLOW, HYD, .517 CUI	1
9	202702-10-8S	ADAPTER, #10 O-RING #8 TUBE	1
10	143853	PLUG #10 M ORB HEX SOCKET	1
11	142668	COUPLER FEMALE 3/4-16 O-RING	4
12	142669	PLUG, COUPLER DUST	4
13	141827	ELBOW 90 3/4ORB3/4JIC 1/32REST	1
14	2062-8-8S	ADAPTER, 90, #8 O-RING-TUBE	11
15	124696	VALVE,CHK DBL PILOT O-RING	2
16	206209-8-8S	ADAPTER,90LONG,#8 O-RING-TUBE	2
17	1-512-010005-05	NUT, HEX, SLFLKG GRB 3/8-16	4
18	1-654-010051-11	SCREW HX CP 3/8-16X2-1/2 G5ZP	4
19	1-654-010047-06	SCREW,HX CP 1/4-20UNCX1 GR5	4
20	1-861-010032-06	WASHER, FLAT 1/4 N ZP/CD	4
21	1-512-010005-01	NUT,HEX,SLFLKG GRB 1/4-20	4

Hydraulic Kit (BEFORE 09/2025)

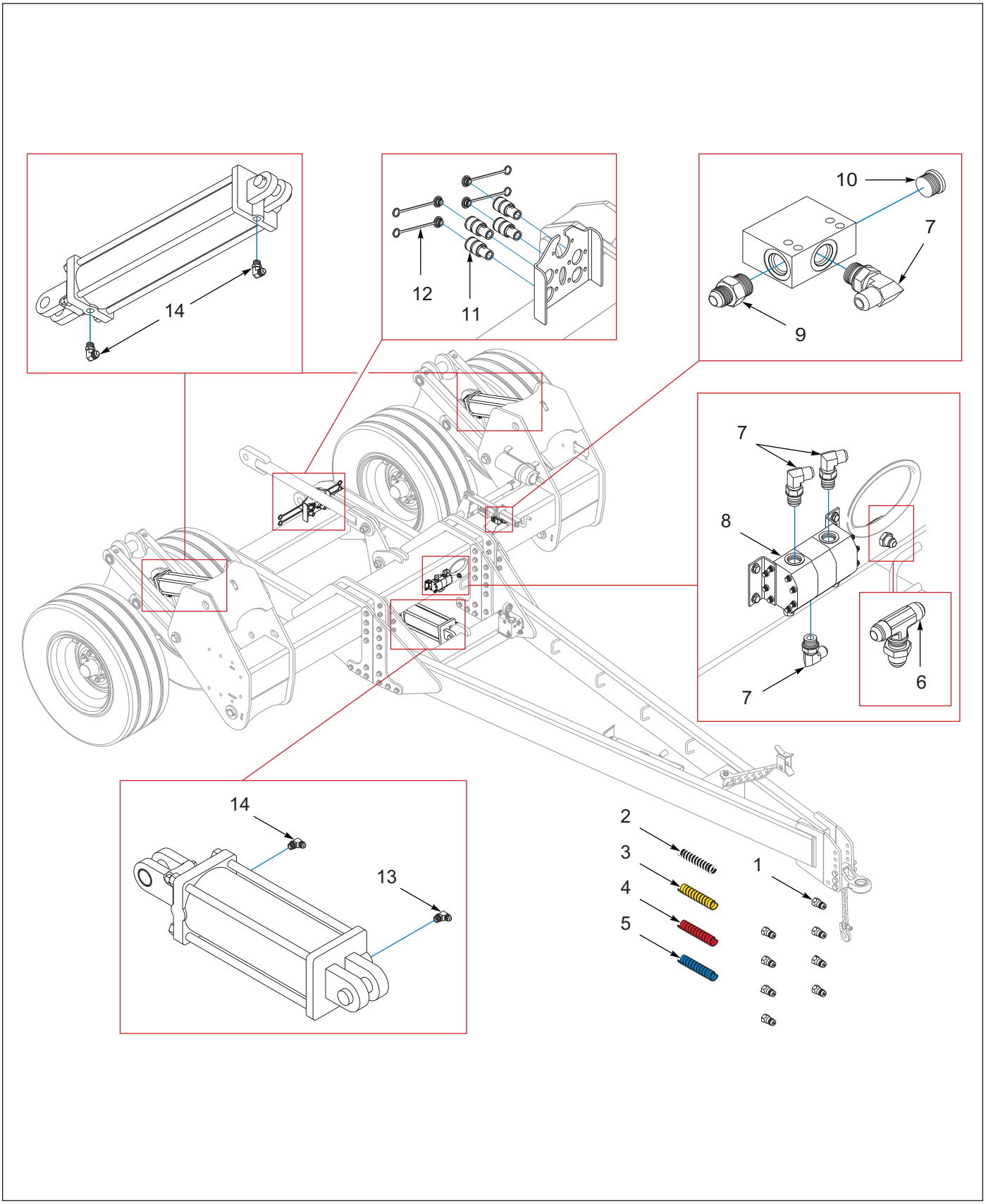

Figure 4-2: Hydraulic Kit (BEFORE 09/2025)

Hydraulic Kit (BEFORE 09/2025)

ITEM	PART NUMBER	DESCRIPTION	QTY.
	221794	KIT-HYDRAULIC CADDY	1
1	141828	COUPLER,MALE 3/4-16 O-RING	8
2	155530	HOSE WRAP, BLACK 1" ID X 8"	1
3	155529	HOSE WRAP, YELLOW 1" ID X 8"	1
4	172973	HOSE WRAP, RED	1
5	155528	HOSE WRAP, BLUE 1" ID X 8"	1
6	221953	BULKHEAD TEE, #8 JIC	1
7	2062-10-8S	ADAPTER,90, #10 O-RING-TUBE	4
8	221788	DIVIDER-FLOW, HYD, .517 CUI	1
9	202702-10-8S	ADAPTER, #10 O-RING #8 TUBE	1
10	143853	PLUG #10 M ORB HEX SOCKET	1
11	142668	COUPLER FEMALE 3/4-16 O-RING	4
12	142669	PLUG, COUPLER DUST	4
13	141827	ELBOW 90 3/4ORB3/4JIC 1/32REST	1
14	2062-8-8S	ADAPTER, 90, #8 O-RING-TUBE	5

Manifold-Draft Assembly

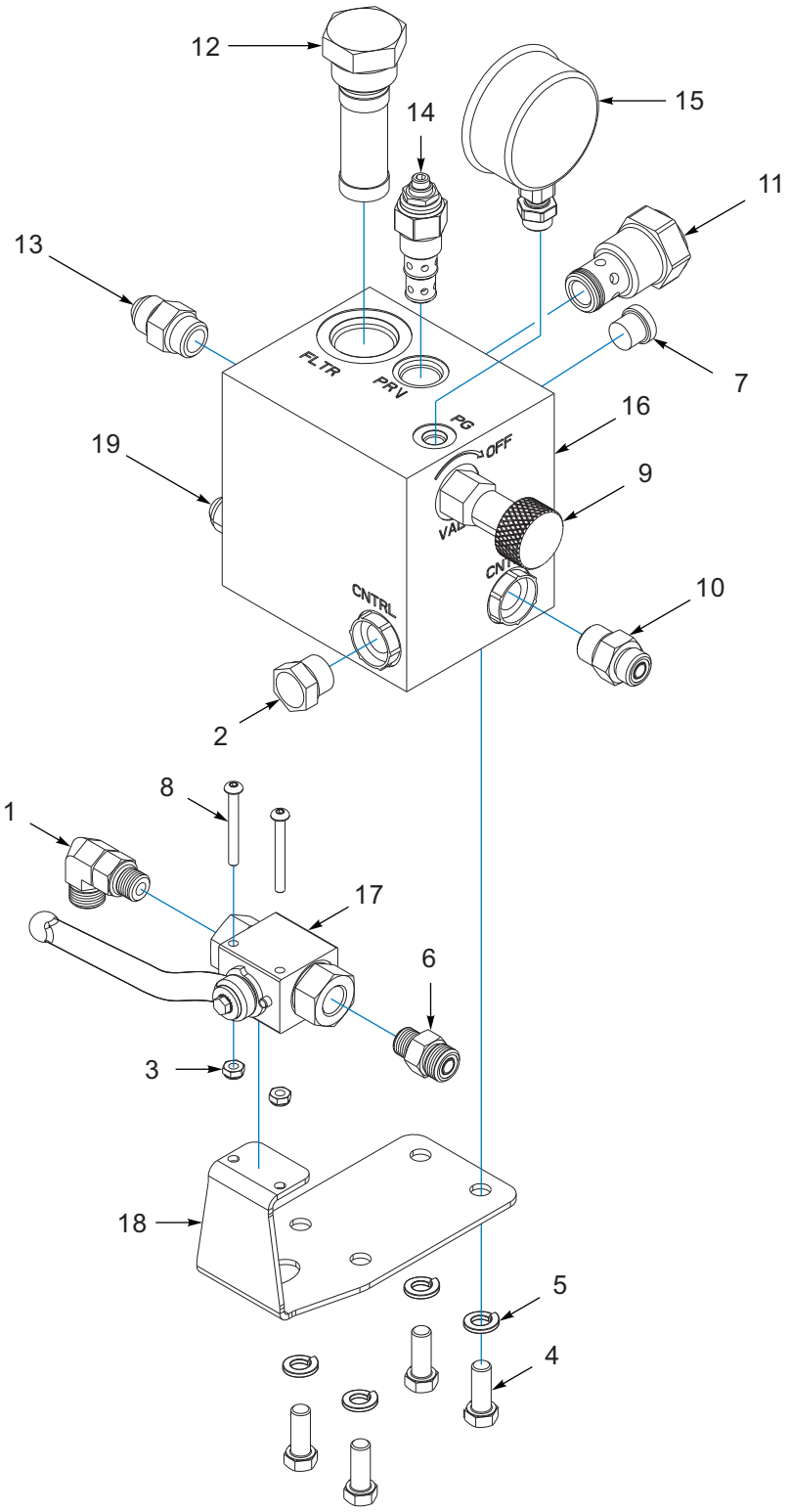

Figure 4-3: Manifold-Draft Assembly

Manifold-Draft Assembly

ITEM	PART NUMBER	DESCRIPTION	QTY.
1	0018136	ADAPTER,6ORSX6ORB, 90 S	1
2	1-007-010025	PLUG, 3/4-16 O-RING BOSS	1
3	1-512-010003-05	NUT HEX SLFLKG W/NYL 10-32	2
4	1-654-010051-05	SCREW,HEX CAP 3/8-16UNCX1 GR5	3
5	1-861-010034-11	WASHER, LKG HLCL SPR, 3/8	3
6	104582	ADAPTER,#6 ORS X #6 ORB ST	1
7	121028	PLUG #4 SAE M O-R BOSS HX SKT	2
8	146693	SCREW, BHSC, 10-32 X 1.75	2
9	171000	CARTRIDGE, SHUT OFF VALVE	1
10	189872	ADAPTER,#6ORS X #8ORB STR	1
11	195196	VALVE - CHECK, CVH103PV	1
12	195198	FILTER-HIGH PRESS, CF/CE-12-10	1
13	202702-8-8S	ADAPTER #8 O-RING TO #8 TUBE	1
14	201283	VALVE-PRESS RED RELV 600-3000	1
15	201291	GAUGE-HYD PRESSURE,3000,-4 ORB	1
16	203384	MANIFOLD DRAFT COMP	1
17	214319	VALVE-BALL, -6 SAE	1
18	214384	BRACKET-VALVE MOUNT	1
19	4K607	RESTRICTOR 3/4-16	1

Caddy Auxiliary Circuit

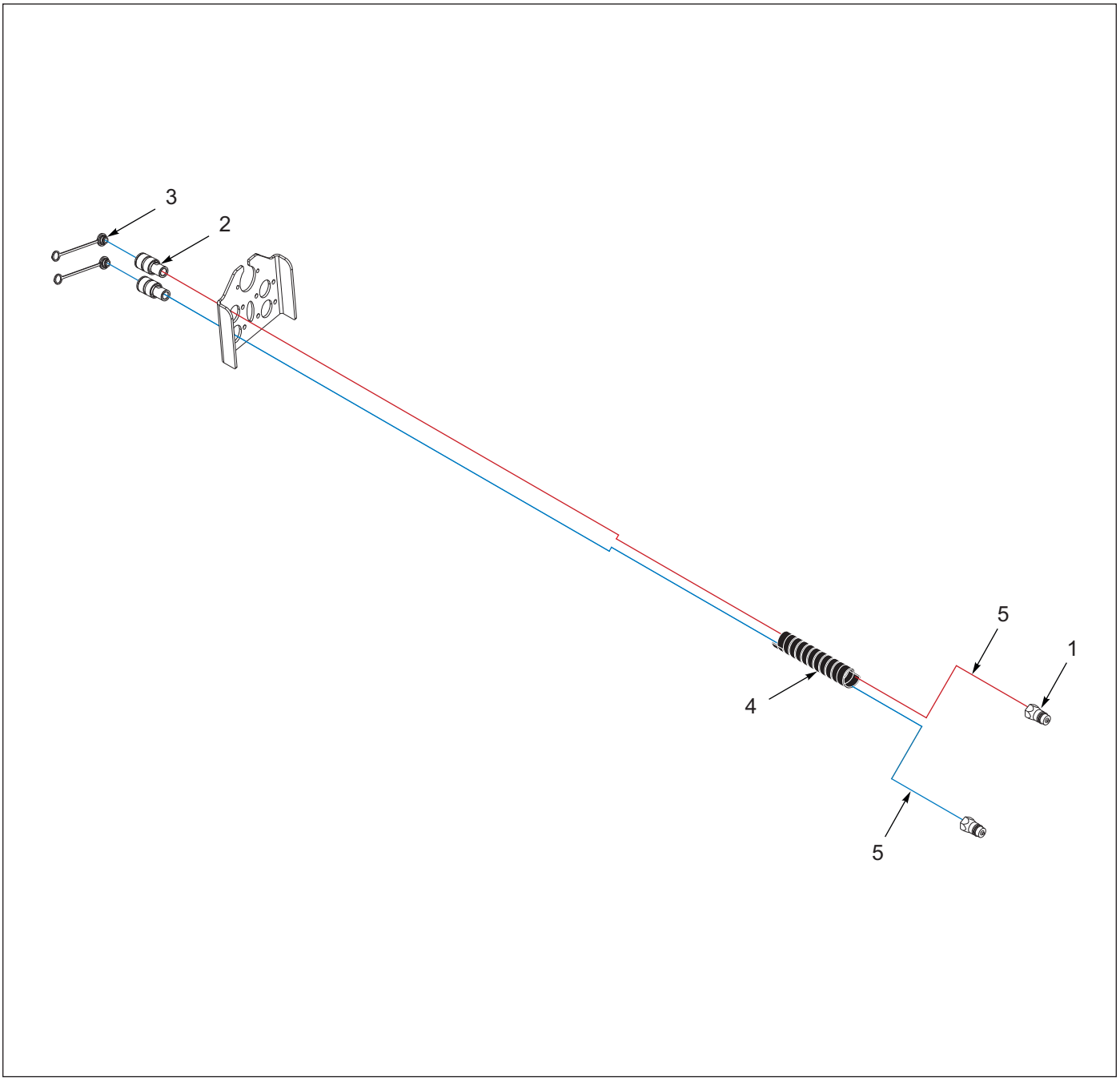

Figure 4-4: Caddy Auxiliary Circuit

Caddy Auxiliary Circuit

ITEM	PART NUMBER	DESCRIPTION	QTY.
1	141828	COUPLER,MALE 3/4-16 O-RING	2
2	142668	COUPLER FEMALE 3/4-16 O-RING	2
3	142669	PLUG, COUPLER DUST	1
4	155530	HOSE WRAP, BLACK 1" ID X 8"	1
5	224447	HOSE, 3/8X200,-8ORB-8ORB **(STANDARD ONLY)**	2
5	224449	HOSE, 3/8X267,-8ORB-8ORB **(HEAVY DUTY ONLY)**	2

Caddy Wing Circuit

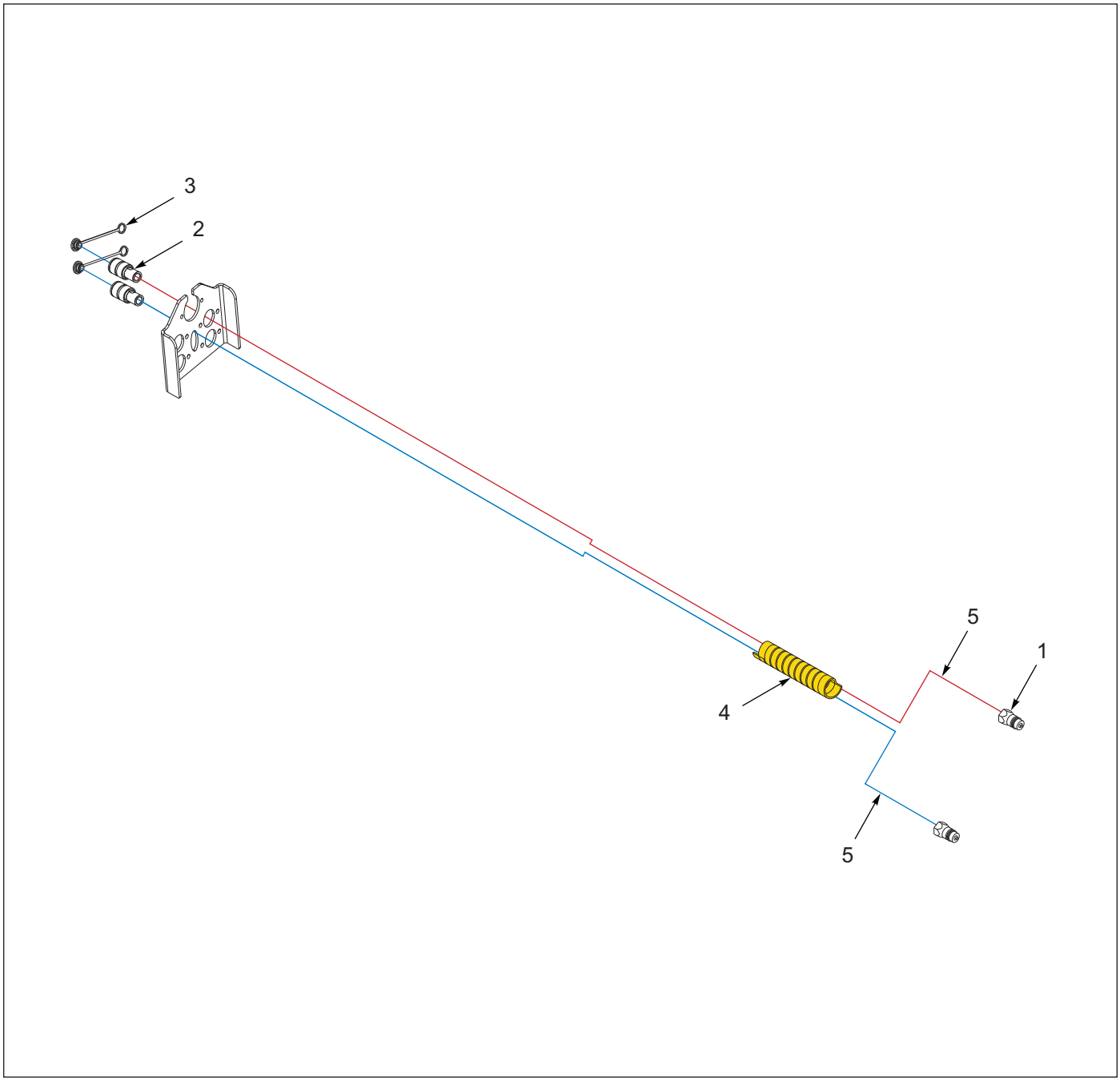

Figure 4-5: Caddy Wing Circuit

Caddy Wing Circuit

ITEM	PART NUMBER	DESCRIPTION	QTY.
1	141828	COUPLER,MALE 3/4-16 O-RING	2
2	142668	COUPLER FEMALE 3/4-16 O-RING	2
3	142669	PLUG, COUPLER DUST	2
4	155529	HOSE WRAP, YELLOW 1" ID X 8"	1
5	224446	HOSE, 3/8X262,-8ORB-8ORB **(STANDARD ONLY)**	2
5	224448	HOSE, 3/8X262,-8ORB-8ORB **(HEAVY DUTY ONLY)**	2

Caddy Top Link Circuit

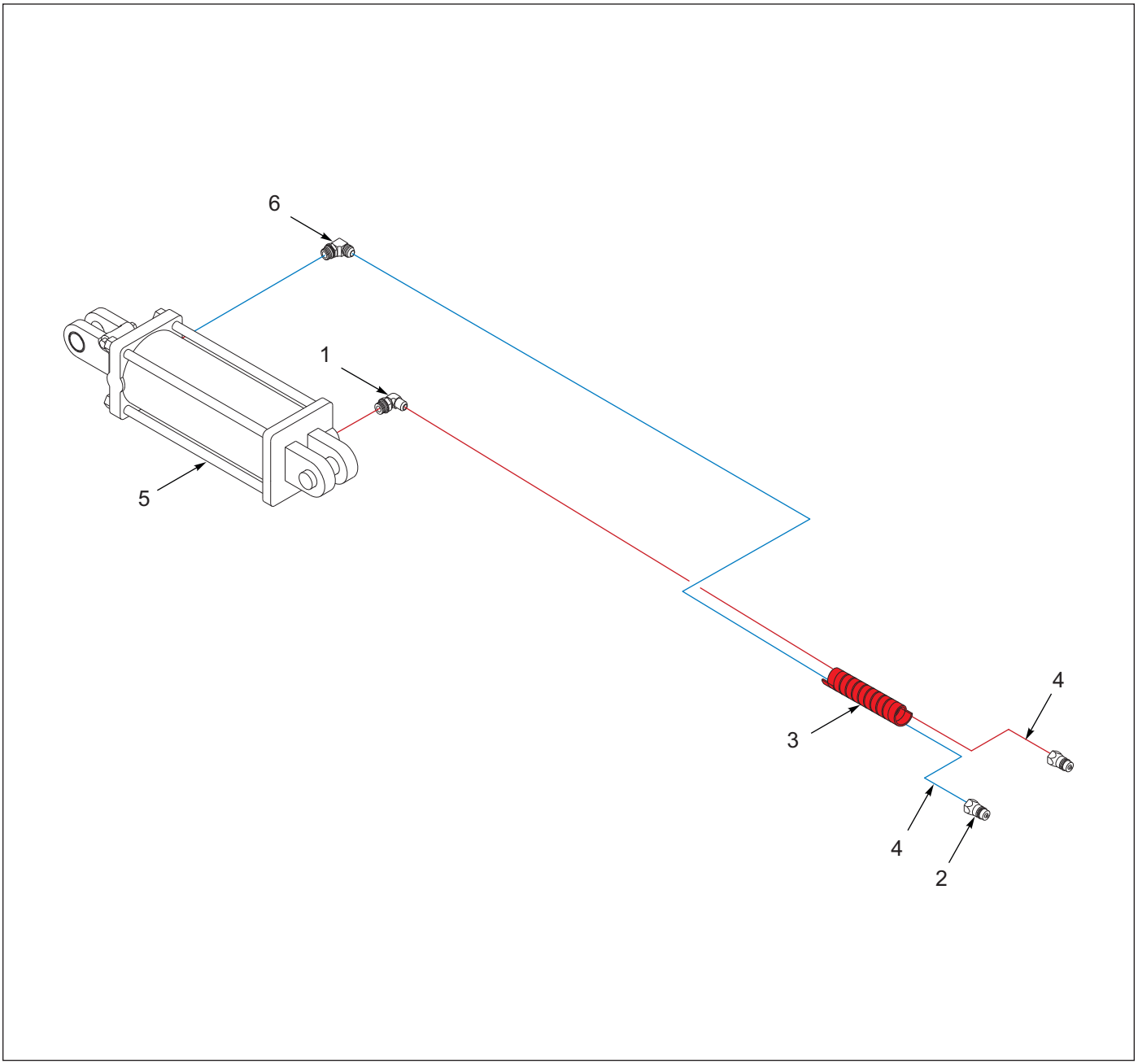

Figure 4-6: Caddy Top Link Circuit

Caddy Top Link Circuit

ITEM	PART NUMBER	DESCRIPTION	QTY.
1	141827	ELBOW 90 3/4ORB3/4JIC 1/32REST	1
2	141828	COUPLER,MALE 3/4-16 O-RING	2
3	172973	HOSE WRAP, RED	1
4	141887	HOSE ASSY 3/8X168 #8JICX#8OR **(STANDARD ONLY)**	2
4	194696	HOSE ASSY, 3/8X222 #8JICX#8OR **(HEAVY DUTY ONLY)**	2
5	224457	CYLINDER, HYD 5 X 10, 3000PSI **(SEE PAGE 4-18)**	1
6	2062-8-8S	ADAPTER, 90, #8 O-RING-TUBE	1

Table provided for general use.

NOTES:

Caddy Lift Circuit (AFTER 09/2025)

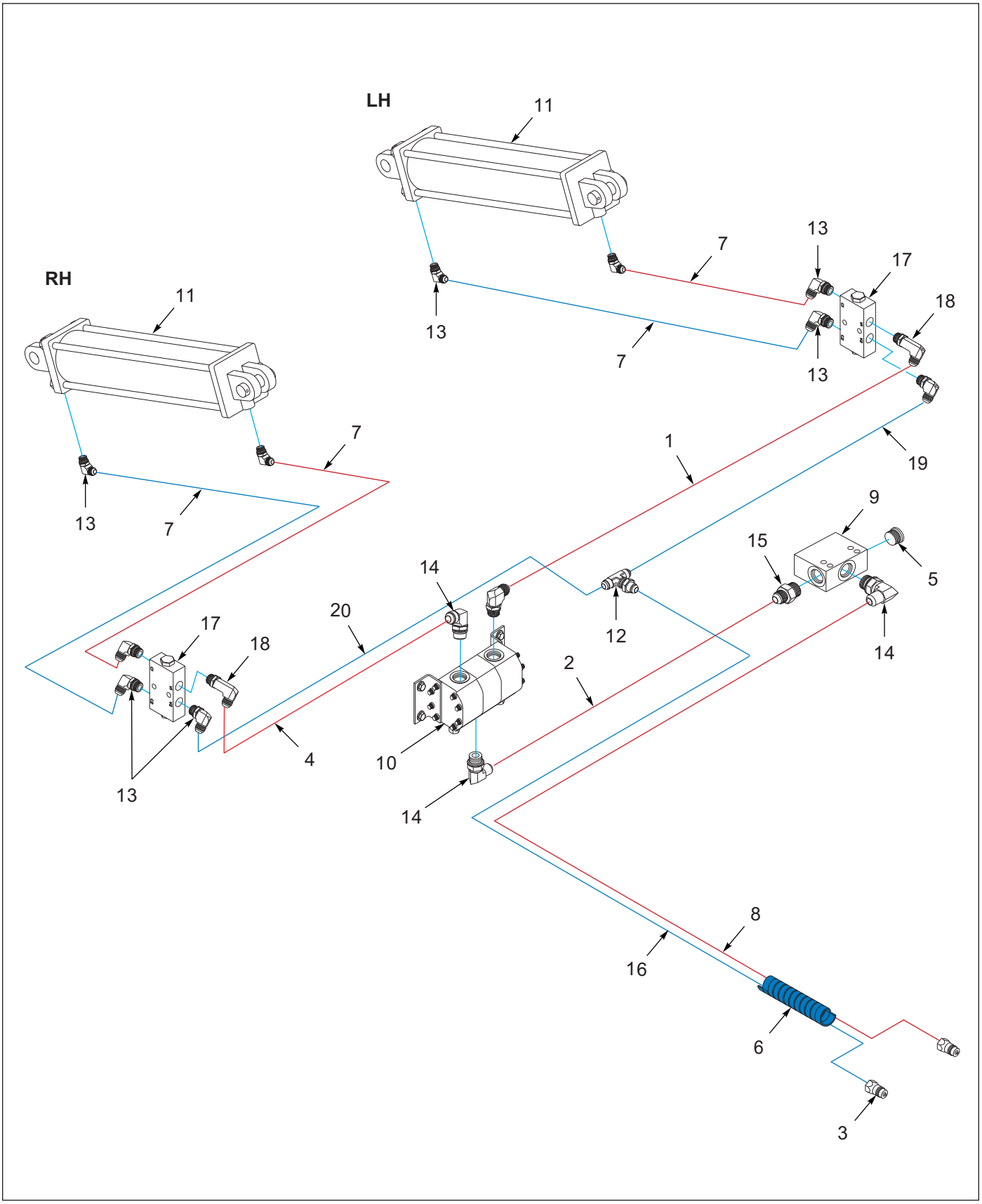

Figure 4-7: Caddy Lift Circuit (AFTER 09/2025)

Caddy Lift Circuit (AFTER 09/2025)

ITEM	PART NUMBER	DESCRIPTION	QTY.
1	181799	HOSE ASSY, 3/8X74, #8 JIC **(STANDARD ONLY)**	1
1	116490	HOSE ASSY 3/8X78 #8 JIC SW **(HEAVY DUTY ONLY)**	1
2	100063	HOSE ASSY 1/2 X92,SAE37,ST-ST **(STANDARD ONLY)**	1
2	124133	CSVP-R HOSE HYD 1/2X101 **(HEAVY DUTY ONLY)**	1
3	141828	COUPLER,MALE 3/4-16 O-RING	2
4	156945	HOSE ASSY 3/8 X100 #8JIC SWIV **(STANDARD ONLY)**	1
4	71509382	HOSE ASSY .38 X 112 **(HEAVY DUTY ONLY)**	1
5	143853	PLUG #10 M ORB HEX SOCKET	1
6	155528	HOSE WRAP, BLUE 1" ID X 8"	1
7	153842	HOSE ASSY 3/8X33 #8 JIC SWIV	4
8	180020	HOSE 1/2X37JICX3/4-16ORINGX230 **(STANDARD ONLY)**	1
8	164600	HOSE 1/2X37JICX3/4-16ORINGX304 **(HEAVY DUTY ONLY)**	1
9	203467	VALVE-LIMIT, STROKE	1
10	221788	DIVIDER-FLOW, HYD, .517 CUI	1
11	- - - - -	CYLINDER-HYD **(STANDARD, SEE PAGE 3-5)** **(HEAVY DUTY, SEE PAGE 3-7)**	2
12	221953	BULKHEAD TEE, #8 JIC	1
13	2062-8-8S	ADAPTER, 90, #8 O-RING-TUBE	10
14	2062-10-8S	ADAPTER,90, #10 O-RING-TUBE	4
15	202702-10-8S	ADAPTER, #10 O-RING #8 TUBE	1
16	166067	HOSE1/2X37JICX3/4 ORINGX154 **(STANDARD ONLY)**	1
16	5001188	HOSE 1/2X207 37JICX3/4-16ORNG **(HEAVY DUTY ONLY)**	1
17	124696	VALVE,CHK DBL PILOT O-RING	2
18	206209-8-8S	ADAPTER,90LONG,#8 O-RING-TUBE	2
19	153843	HOSE ASSY 3/8X67 #8 JIC SWIV	1
20	208479	HOSE ASSY 3/8X84,8FJS ENDS **(STANDARD ONLY)**	1
20	195647	HOSE ASSY, 3/8X93 #8 JIC SWIV **(HEAVY DUTY ONLY)**	1

Caddy Lift Circuit (BEFORE 09/2025)

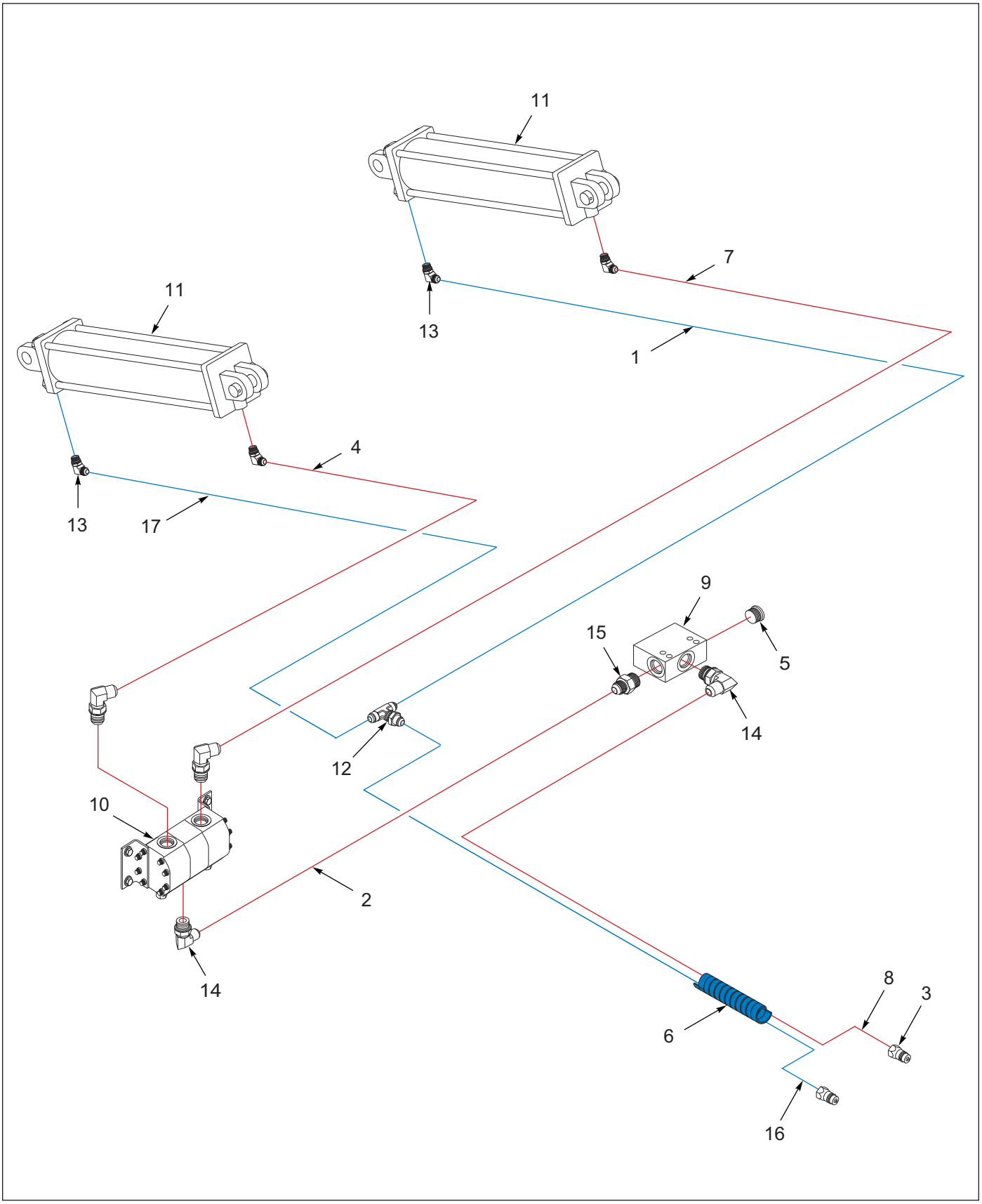

Figure 4-8: Caddy Lift Circuit (BEFORE 09/2025)

Caddy Lift Circuit (BEFORE 09/2025)

ITEM	PART NUMBER	DESCRIPTION	QTY.
1	208479	HOSE ASSY 3/8X84,8FJS ENDS **(STANDARD ONLY)**	1
1	116433	HOSE ASSY 3/8X90 #8 JIC SWV **(HEAVY DUTY ONLY)**	1
2	100063	HOSE ASSY 1/2X92,SAE37,ST-ST **(STANDARD ONLY)**	1
2	124133	CSVP-R HOSE HYD 1/2X101 **(HEAVY DUTY ONLY)**	1
3	141828	COUPLER,MALE 3/4-16 O-RING	2
4	217050	HOSE ASSY,3/8 X133-8FJIC-8FJIC **(STANDARD ONLY)**	1
4	141881	HOSE ASSY 3/8X136 #8 JIC SWIV **(HEAVY DUTY ONLY)**	1
5	143853	PLUG #10 M ORB HEX SOCKET	1
6	155528	HOSE WRAP, BLUE 1" ID X 8"	1
7	156945	HOSE ASSY 3/8X100 #8JIC SWIV	1
8	180020	HOSE 1/2X37JICX3/4-16ORINGX230 **(STANDARD ONLY) (AFTER 06/07/2023)**	1
8	168891	HOSE 1/2X37JICX3/4-16ORINGX225 **(STANDARD ONLY) (BEFORE 06/07/2023)**	1
8	164600	HOSE 1/2X37JICX3/4-16ORINGX304 **(HEAVY DUTY ONLY)**	1
9	203467	VALVE-LIMIT, STROKE	1
10	221788	DIVIDER-FLOW, HYD, .517 CUI	1
11	- - - - -	CYLINDER-HYD **(STANDARD, SEE PAGE 3-5)** **(HEAVY DUTY, SEE PAGE 3-7)**	2
12	221953	BULKHEAD TEE, #8 JIC	1
13	2062-8-8S	ADAPTER, 90, #8 O-RING-TUBE	4
14	2062-10-8S	ADAPTER,90, #10 O-RING-TUBE	4
15	202702-10-8S	ADAPTER, #10 O-RING #8 TUBE	1
16	166067	HOSE1/2X37JICX3/4 ORINGX154	1
16	5001188	HOSE 1/2X207 37JICX3/4-16ORNG	1
17	71509382	HOSE ASSY .38 X 112	1

Lift Cylinder, 4 x 20 - 227296

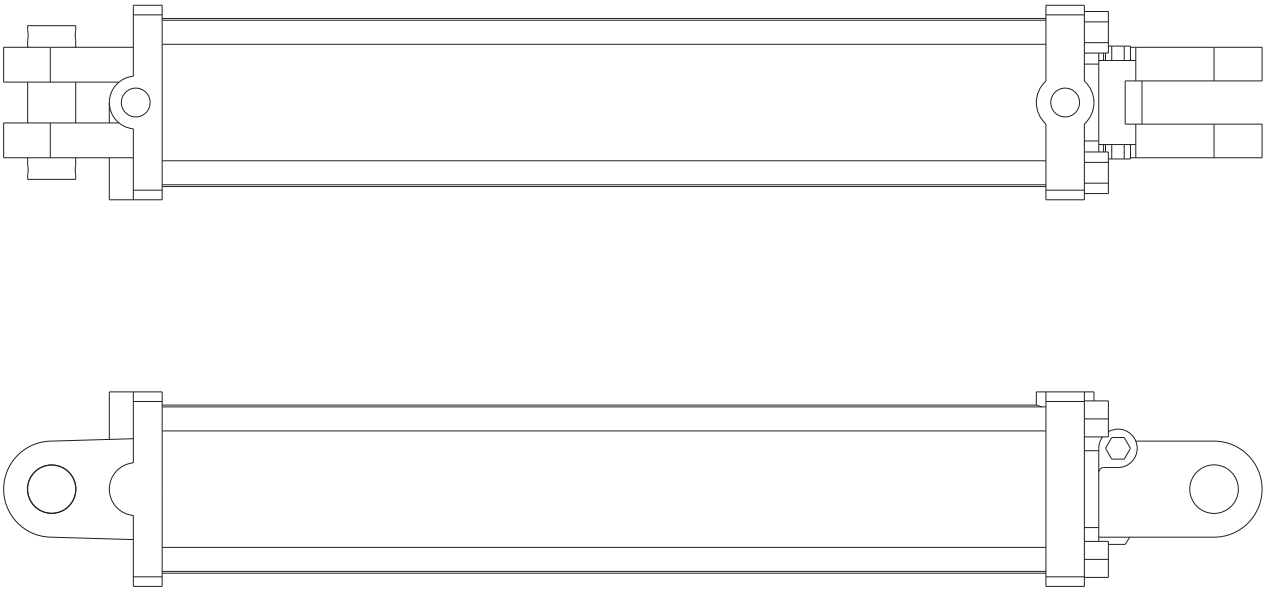

Figure 4-9: Lift Cylinder, 4 x 20 - 227296

Lift Cylinder, 4 x 20 - 227296

ITEM	PART NUMBER	DESCRIPTION	QTY.
	227296	CYLINDER-HYD, 4 X 20, 3000PSI	- -
	227297	KIT-PACKING,CYL 227296,4 X 20	1

Lift Cylinder, 4-1/2 x 20 - 221792

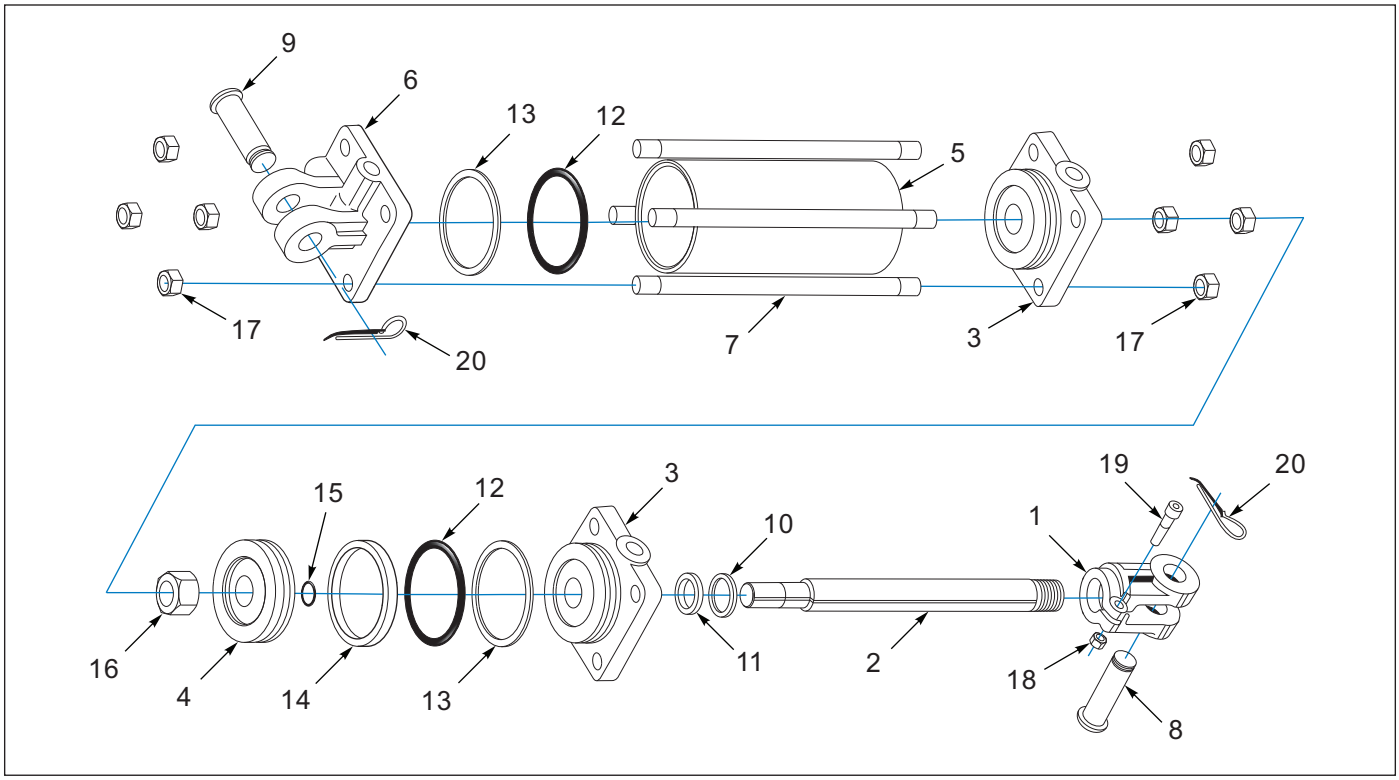

Figure 4-10: Lift Cylinder, 4-1/2 x 20 - 221792

Lift Cylinder, 4-1/2 x 20 - 221792

ITEM	PART NUMBER	DESCRIPTION	QTY.
	221792	CYLINDER-HYDRAULIC, 4-1/2 X 20, ASM	- -
	224764	KIT-PACKING,CYL 221792,4.5X20	1
1	- - - - -	CLEVIS	1
2	- - - - -	ROD	1
3	- - - - -	HEAD	1
4	- - - - -	PISTON	1
5	- - - - -	TUBE	1
6	- - - - -	BASE	1
7	- - - - -	TIE ROD	4
8	- - - - -	CLEVIS PIN	- -
9	- - - - -	CLEVIS PIN	1
10	- - - - -	ROD WIPER	1
11	- - - - -	U-CUP	1
12	- - - - -	O-RING	2
13	- - - - -	BACK-UP	2
14	- - - - -	CROWN SEAL	1
15	- - - - -	O-RING	1
16	- - - - -	PISTON NUT	1
17	- - - - -	TIE ROD NUT	8
18	- - - - -	CLEVIS NUT	1
19	- - - - -	CAPSCREW	1

Top Link Cylinder, 5 x 10 - 224457

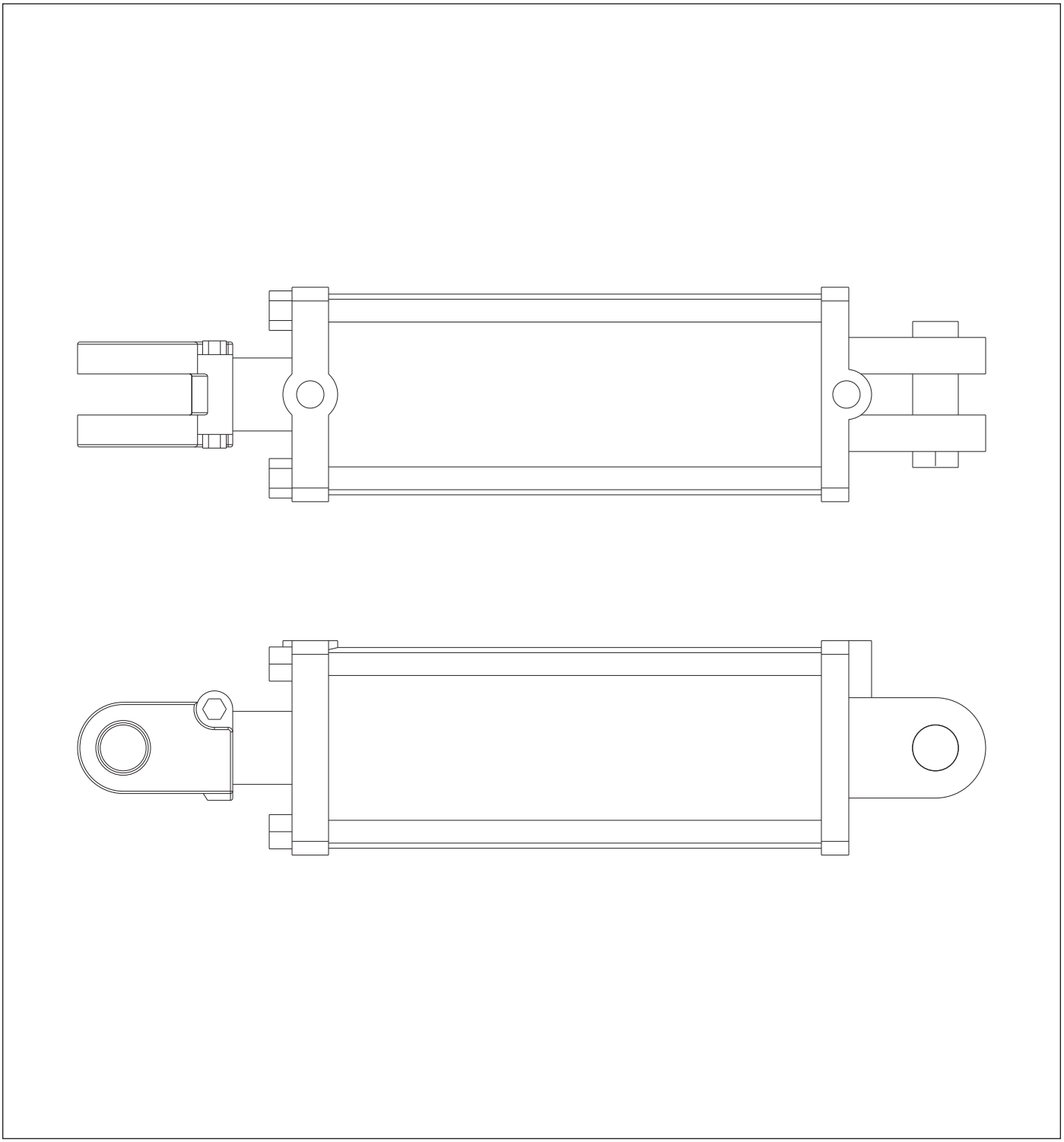

Figure 4-11: Top Link Cylinder, 5 x 10 - 224457

Top Link Cylinder, 5 x 10 - 224457

ITEM	PART NUMBER	DESCRIPTION	QTY.
	224457	CYLINDER, HYD 5 X 10, 3000PSI	- -
	224785	KIT-PACKING,5X10X2	1

Table provided for general use.

NOTES:

Decals

Decals

1

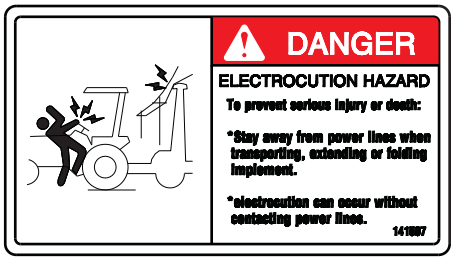

2

3

4

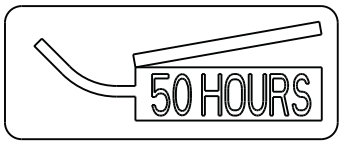

7

11

12

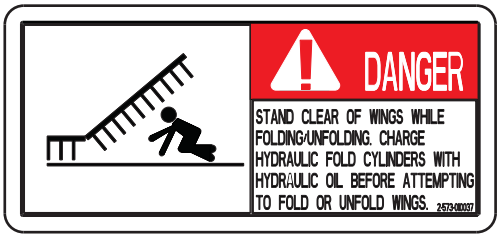

5

6

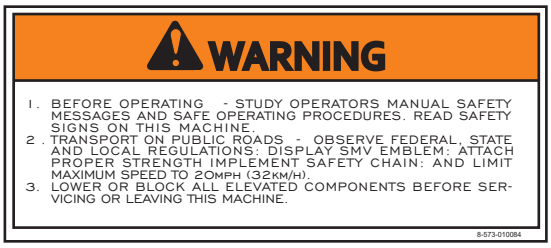

10

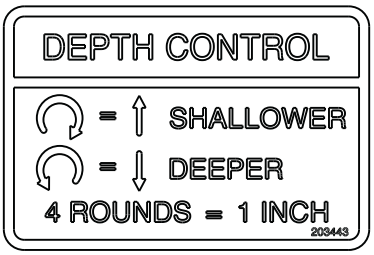

8

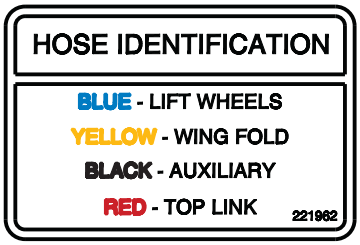

9

13

Figure 5-1: Decals

Decals

ITEM	PART NUMBER	DESCRIPTION	QTY.
1	170509	DECAL,BRILLION LANDOLL 40"	2
2	141597	DECAL, DANGER ELECTROCUTION	1
3	144193	DECAL, SIS 20 MPH	1
4	1-573-010017	DECAL, LANDOLL (WHITE)	2
5	2-573-010037	DECAL, DANGER, WING	1
6	2-573-010198	DECAL, MEMBER FEMA	1
7	2-573-010330-03	DECAL, LUBRICATION 50 HOURS	2
8	203443	DECAL-DEPTH CONTROL, HSL	1
9	221962	DECAL-CADDY HOSE IDNTIFICATION	1
10	8-573-010084	DECAL WARNING BEFORE OPERATG	1
11	170510	DECAL,BRILLION LANDOLL 18"	2
12	193500	DECAL,BRILLION 2-3/4 HT	2
13	8-573-010059	DECAL IMPORTANT NO TURNING	1

Decal Placement

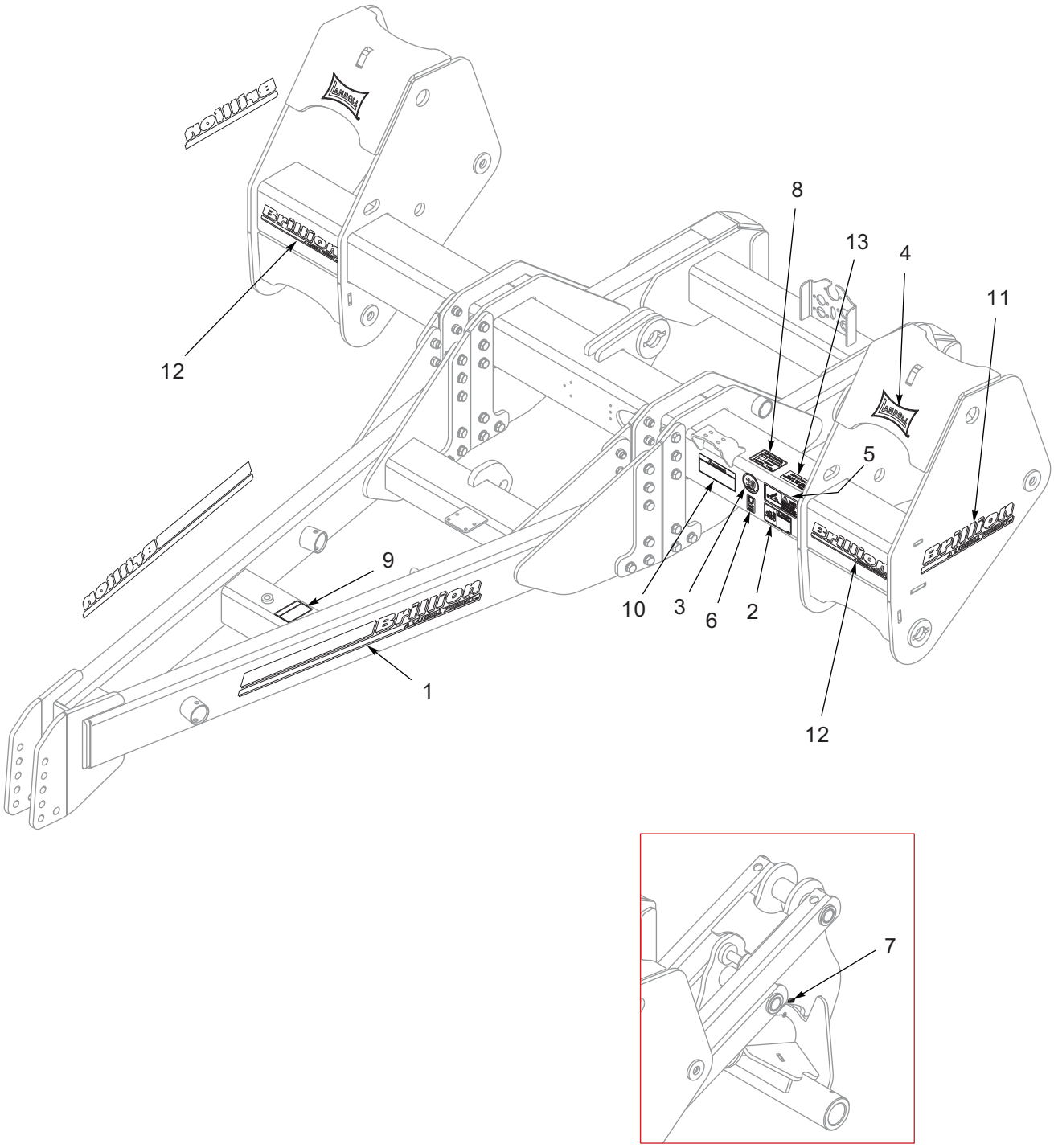

Figure 5-2: Decal Placement - Zone Commander Caddy (1 of 2)

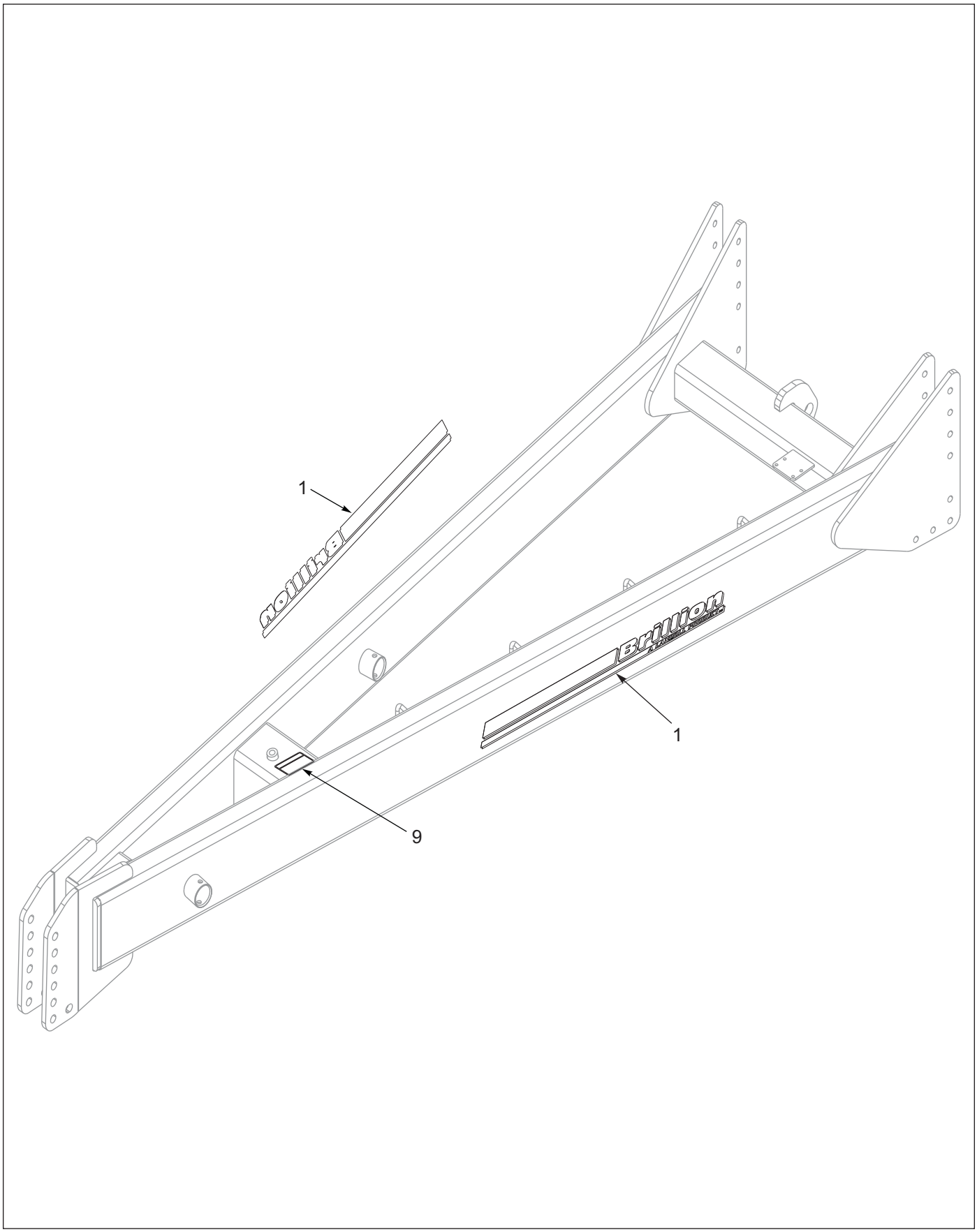

Figure 5-3: Decal Placement - Zone Commander Caddy (2 of 2)

Table provided for general use.

NOTES:

Glossary

For clarity this glossary of industry standard abbreviations and their definitions are provided.

A

ASM . . . . . .Assembly

B

BATT . . . . . .Battery
BHSC . . . . . .Button Head Socket Cap
BLK . . . . . Black

C

CB . . . . . .Carriage Bolt
CONN . . . . . Connector
CRG . . . . . Carriage
CTSK . . . . . Countersunk
CTWT . . . . . .Counterweight
CVR . . . . . .Cover
CYD . . . . . .Cylinder

D

DBL . . . . . .Double
DIA . . . . . Diameter

E

ENCLSD . . . . . Enclosed

F

FHCS . . . . . .Flanged Head Cap Screw
FHHCS . . . . . Flanged Hex Head Cap Screw
FL OR **FLG** . . . . . Flange
FLT . . . . . Flat

G

GA . . . . . Gauge

H

HHCS . . . . . .Hex Head Cap Screw
HCS . . . . . High Carbon Steel
HD . . . . . .Head
HLCL . . . . . .Helical
HCSKT . . . . . .Hex Socket
HSFC . . . . . .Hex Socket Flat Countersunk
HYD . . . . . Hydraulic

I

ID . . . . . Inside Diameter

L

LH . . . . . Lefthand
LKG OR **LOCK** . . . . . .Locking
LWR . . . . . Lower

M

MANF . . . . . Manifold
MNT . . . . . Mount

N

NRW . . . . . Narrow
- - - - - . . . . . .Not Serviced Separately

O

OD . . . . . Outside Diameter
OHG . . . . . .Overhead Guard
ORFS OR **ORS** . . . . . O-Ring Seal
ORP OR **ORB** . . . . . .O-Ring Boss

P

P-STEER . . . . . .Power Steering
PTFE . . . . . Polytetrafluoroethylene (Teflon)

R

RH . . . . . Righthand
RND . . . . . Round

S

SER . . . . . Series
SHCS . . . . . .Socket Head Cap Screw
SHLD . . . . . Shield
SKT . . . . . .Socket
SLFLKG . . . . . Selflocking
SOC . . . . . .Socket
SPDT . . . . . Single Pole Double Throw
SPR . . . . . Spring
SQ . . . . . Square
SRTD . . . . . Serrated
SSCR . . . . . .Setscrew
SST . . . . . Stainless Steel
STD . . . . . .Standard

U

UPR . . . . . Upper

W

WHL . . . . . Wheel
WLD OR **WLDMT** . . . . . Weldment

Chapter 7

Index

Numerics

0018136 4-6
100063 . . . . . 4-13, 4-15
1-007-010025 4-6
100809 3-18
101385 . . . . . 3-2, 3-4
101404 2-2
102498 . . . . . 1-5, 1-6
102600 1-5
102601 1-6
103841 . . . . . 3-16, 3-18
104358 3-19
104582 4-6
108628 3-13
116100 . . . . . 1-1, 3-8
116433 4-15
116490 4-13
121028 4-6
122767 1-4
122917 3-13
124133 . . . . . 4-13, 4-15
124696 4-2
1-298-010001-1 1-1
134912 . . . . . 3-6, 3-8
140647 . . . . . 3-16, 3-18
141249 . . . . . 3-16, 3-18
141597 5-2
141827 . . . . . 4-2, 4-4, 4-9
141828 . . . . . 4-2, 4-4, 4-7, 4-8, 4-9, 4-13, 4-15
141881 4-15
141887 4-9
142668 . . . . . 4-2, 4-4, 4-7, 4-8
142669 . . . . . 4-2, 4-4, 4-7, 4-8
143853 . . . . . 4-2, 4-4, 4-13, 4-15
144048 3-13
144193 5-2
146693 4-6
147072 . . . . . 1-1, 3-8
150076 3-20
1-512-010003-05 4-6
1-512-010005-01 . . . . . 2-2, 3-16, 3-18, 3-20, 4-2
1-512-010005-03 . . . . . 3-10, 3-12, 3-13
1-512-010005-05 3-20
1-512-010005-09 . . . . . 1-1, 1-4, 3-6, 3-8, 3-10, 3-12
1-512-010005-13 . . . . . 3-10, 3-12
1-512-010005-15 . . . . . 3-2, 3-16, 3-18
1-512-010005-19 . . . . . 1-4, 3-16, 3-18
1-512-010007-07 . . . . . 3-16, 3-18
1-516-010001-20 . . . . . 1-5, 1-6
153696 . . . . . 3-16, 3-18
153842 4-13
155528 . . . . . 4-2, 4-4, 4-13, 4-15
155529 . . . . . 4-2, 4-4, 4-8
155530 . . . . . 4-2, 4-4, 4-7
1-557-010362-40 . . . . . 3-10, 3-12
1-557-010362-51 . . . . . 1-5, 1-6
1-557-010403 3-19
156945 . . . . . 4-13, 4-15
156950 . . . . . 3-16, 3-18
156973 1-5
156979 1-5
1-573-010017 5-2
159970 1-5
1-630-010021-03 3-13
164472 . . . . . 1-1, 3-6, 3-8, 3-10
164600 . . . . . 4-13, 4-15
1-647-010004259 1-4
165257 . . . . . 3-10, 3-12
165259 3-13
165260 3-13
1-654-010047-04 2-2
1-654-010047-06 . . . . . 3-16, 3-18, 3-20, 4-2
1-654-010047-10 2-2
1-654-010051-05 . . . . . 3-20, 4-6
1-654-010055-09 . . . . . 3-10, 3-12
1-654-010055-12 . . . . . 3-6, 3-8, 3-10
1-654-010055-17 . . . . . 1-1, 1-4
1-654-010059-07 . . . . . 3-10, 3-12

1-654-010061-07 . . . . . 3-2, 3-16, 3-18
1-654-010061-23 3-16
166067 . . . . . 4-13, 4-15
166717 3-13
168891 4-15
170302 1-6
170310 1-6
170509 5-2
170510 5-2
170704 . . . . . 1-4, 1-6
170705 1-6
171000 4-6
171107 1-6
171556 . . . . . 3-10, 3-12
171773 1-6
172579 . . . . . 3-16, 3-18
172891 1-4
172973 . . . . . 4-2, 4-4, 4-9
174437 . . . . . 2-2, 2-4
174708 3-13
175151 2-4
177397 3-18
177398 3-16
178514 . . . . . 2-2, 2-4
179205 . . . . . 3-6, 3-8, 3-10
179488 1-4
180020 . . . . . 4-13, 4-15
181799 4-13
182288 3-13
182289 3-13
183815 . . . . . 3-10, 3-12
1-861-010005 . . . . . 1-5, 1-6
1-861-010032-06 4-2
1-861-010032-07 . . . . . 2-2, 3-16, 3-18, 3-20
1-861-010032-08 . . . . . 3-10, 3-12
1-861-010032-18 . . . . . 3-10, 3-12
1-861-010032-20 . . . . . 3-2, 3-16, 3-18
1-861-010032-24 . . . . . 3-16, 3-18
1-861-010032-29 . . . . . 3-6, 3-8
1-861-010034-11 4-6
186592 1-4
187317 1-4
189451 . . . . . 3-16, 3-18
189872 4-6
192890 3-8
193089 1-4
193500 5-2
194696 4-9
195196 4-6
195198 4-6
195579 . . . . . 3-10, 3-12
196754 . . . . . 3-16, 3-18
1P675 . . . . . 1-1, 3-8
200829 . . . . . 3-16, 3-18
200999 . . . . . 3-10, 3-12
201283 4-6
201291 4-6
202702-10-8S 4-2, 4-4, 4-13, 4-15
202702-8-8S 4-6
203384 4-6
203443 5-2
203467 . . . . . 3-10, 3-12, 4-13, 4-15
204385 1-7
206209-8-8S 4-2
2062-10-8S 4-2, 4-4, 4-13, 4-15
2062-8-8S 4-2, 4-4, 4-9, 4-13, 4-15
208479 4-15
209432 . . . . . 3-2, 3-4
210764 . . . . . 3-10, 3-12
214319 4-6
214384 4-6
2-150-010174 . . . . . 3-2, 3-4, 3-6, 3-8
215458 . . . . . 1-1, 3-6, 3-8, 3-10
217050 4-15
219778 . . . . . 3-2, 3-4
221321 3-2
221333 1-4
221337 . . . . . 3-6, 3-8
221338 . . . . . 3-6, 3-8
221350 . . . . . 3-6, 3-8, 3-10
221357 1-4
221360 1-4
221361 1-4
221367 . . . . . 3-2, 3-4

221375 3-2
221378 . . . . . 3-2, 3-4
221382 . . . . . 3-10, 3-12, 3-13
221383 3-13
221788 . . . . . 4-2, 4-4, 4-13, 4-15
221789 . . . . . 3-2, 3-4
221790 . . . . . 3-2, 3-4
221791 . . . . . 3-2, 3-4
221792 . . . . . 3-6, 3-8, 4-16, 4-17
221794 . . . . . 4-2, 4-4
221797 2-4
221934 . . . . . 3-6, 3-8
221936 3-19
221937 . . . . . 3-6, 3-8, 3-10
221953 . . . . . 4-2, 4-4, 4-13, 4-15
221962 5-2
222001 3-20
223319 2-4
223321 3-4
223337 . . . . . 1-1, 3-6
223340 . . . . . 1-4, 3-8
223348 3-12
223350 . . . . . 3-10, 3-12
223352 . . . . . 3-10, 3-12
223363 3-16
223365 . . . . . 3-2, 3-16
223366 . . . . . 3-2, 3-16
223369 3-10
223435 1-5
223437 1-5
223438 1-5
223439 1-5
223440 . . . . . 1-1, 1-5
224402 1-8
224405 3-18
224407 3-18
224408 3-18
224409 . . . . . 3-6, 3-8, 3-10
224420 3-4
224423 . . . . . 3-10, 3-12
224446 4-8
224447 4-7
224448 4-8
224449 4-7
224457 . . . . . 3-2, 3-4, 4-9, 4-18
224764 4-17
224785 4-18
227102 1-4
227296 3-6
230903 1-8
230904 . . . . . 1-4, 1-8
230908 1-7
230909 . . . . . 1-1, 1-7
2-368-010287 . . . . . 2-2, 3-16, 3-18
253735 3-2
2-573-010037 5-2
2-573-010198 5-2
2-573-010330-03 5-2
3K287 . . . . . 3-10, 3-12
4001060 1-5
4K607 4-6
5001188 . . . . . 4-13, 4-15
5400 1-4
5D979 . . . . . 3-2, 3-4, 3-6, 3-8
71509382 . . . . . 4-13, 4-15
8-573-010059 5-2
8-573-010084 5-2
8K756 . . . . . 3-2, 3-4
9-150-010136 . . . . . 3-2, 3-4

T

TR575 1-7

Instructions for Ordering Parts

**** Repair parts must be ordered through an Authorized Dealer ****

DEALER INSTRUCTIONS FOR ORDERING PARTS FROM LANDOLL PARTS DISTRIBUTION CENTER

Phone: 800-423-4320 or 785-562-5381 **Fax: 888-527-3909**
Order online: dealer.landoll.com

DATA PLATE

The Data Plate lists the model number and serial number, is located on the front of the frame.

SERIAL NUMBER

The following information will help decode the Landoll serial number.
25D2400100 = xxmyyssssss

xx	= model series (i.e. “25” for all 2512 Models)
m	= month of manufacture (ex. “D” means April. The letter I is not used.)
yy	= last digits of the year manufactured (ex. “24” means 2024)
sssss	= Sequential number used to track warranty and service information.

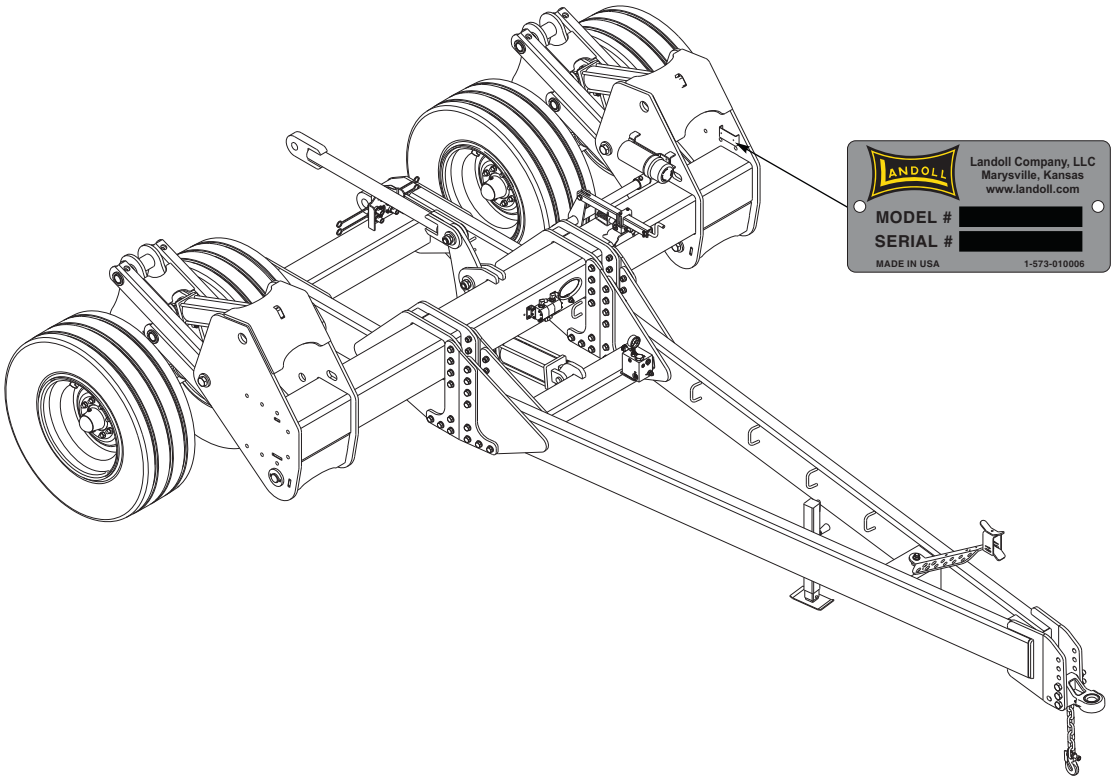

Manuals for Caddy

Manual Number	Manual Type
F-1076	Caddy Parts Manual

Document Control Revision Log:

Date	Form #	Improvement(s): Description and Comments
05/2020	F-1076-0520	New Standard & Heavy Duty Caddy Parts Manual
07/2021	F-1076-0721	ECN 47018 - Revised Tire/Wheel Part Numbers
07/2022	F-1076-0722	ECN 48293 - Stor-A-Way Harness Added ECN 48295 - Depth Stop Guide - Color Correct
09/2023	F-1076-2309	ECN 49102 - Hydraulic Asm ECN 49278 - Rod Cylinder Depth Stop Kit Updated ISO logos to ISO 9001:2015 (Revised 04/2024)
06/2024	F-1076-2406	ECN 49996, 50031 - Added Washers to Frame Assembly
07/2024	F-1076-2407	ECN 50076 - Axle-Spindle Toggle Asm
05/2025	F-1076-2505	ECN 50633 - Standard Caddy Top-Link, Decal
10/2025	F-1076-2510	ECN 51316, 51362 - Revised Hydraulics, Add Double Pilot O-Ring Check Valve as Standard, New Hydraulic Cylinder Pin *Revised “Caddy Top Link Circuit” Schematic - 10/06/2026

Equipment from Landoll Company, LLC is built to exacting standards ensured by ISO 9001:2015 registration at all Landoll manufacturing facilities.

2512 Zone Commander Standard & Heavy Duty Caddy

Parts Manual

Re-Order Part Number F-1076

LANDOLL COMPANY, LLC
1900 North Street
Marysville, Kansas 66508
(785) 562-5381
800-428-5655 ~ WWW.LANDOLL.COM

Copyright 2026. Landoll Company, LLC
"All rights reserved, including the right to reproduce this material or portions thereof in any form."