Model 2700
Vertistrip
Operator's Manual

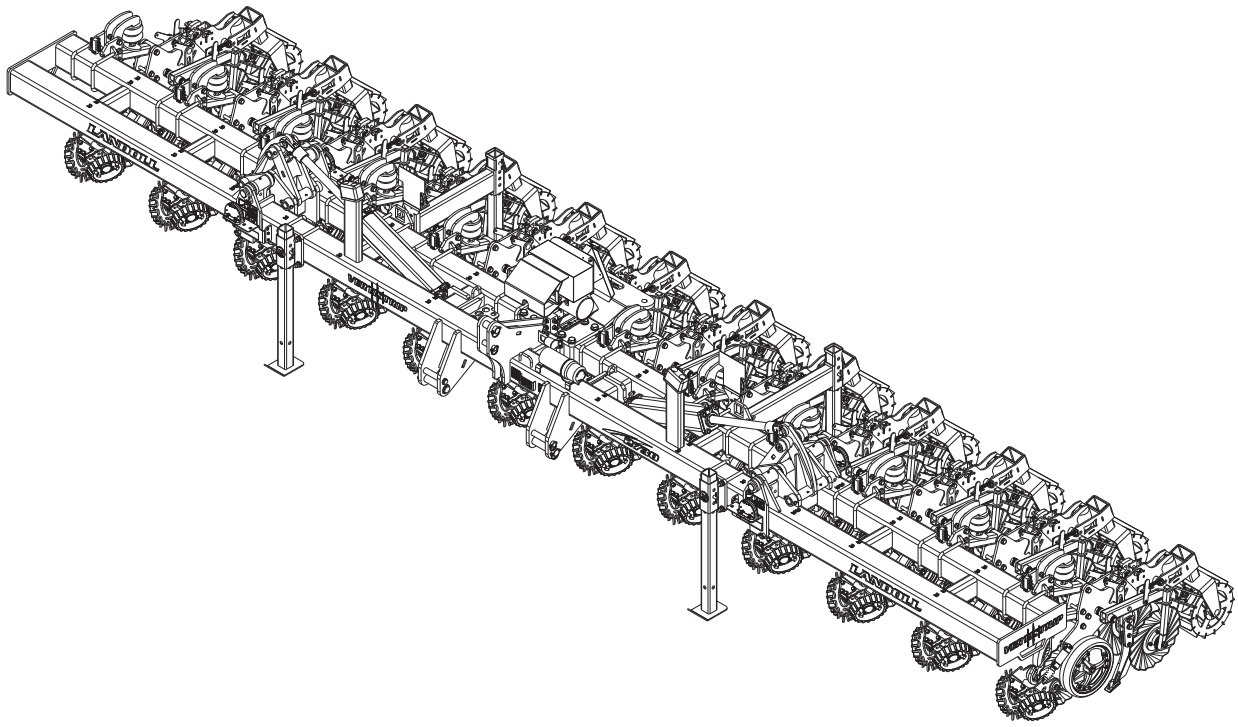

LANDOLL COMPANY, LLC
1900 North Street
Marysville, Kansas 66508
(785) 562-5381
800-428-5655 ~ WWW.LANDOLL.COM

F-1201-2610

Instructions for Ordering Parts

**** Repair parts must be ordered through an Authorized Dealer ****

DEALER INSTRUCTIONS FOR ORDERING PARTS FROM LANDOLL PARTS DISTRIBUTION CENTER

Phone #: 800-423-4320 or 785-562-5381 **Fax #: 888-527-3909**
Order online: dealer.landoll.com

SERIAL NUMBER PLATE

The Serial Number Plate, which lists the model number and serial number, is located on the front of the hitch *See Figure 1-1*

SERIAL NUMBER NOMENCLATURE

The following information will help decode the 2700 Vertistrip serial number

27H2600100 = xxmyyssss

The 2700 Vertistrip series QR code decal, may be scanned to link to the most current manuals, located on the front of the frame *See Figure 1-1*.

xx	= model series (i.e. 27 for Vertistrip)
m	= month of manufacture (ex. “H” means October. The letter I is not used.)
yy	= year manufactured (ex. “26” means 202)
sssss	= Sequential number used to track warranty and service information.

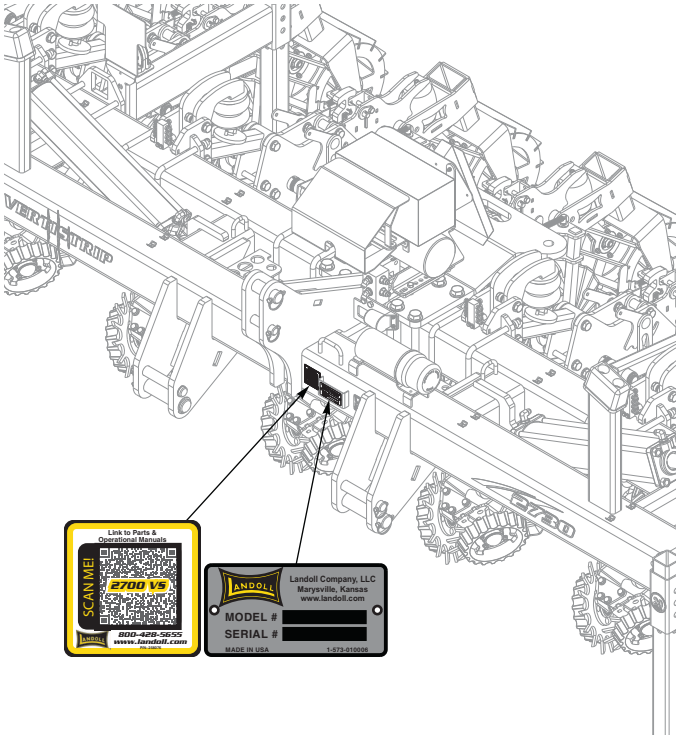

Figure 1-1: Serial Number Plate and QR Code Decal Location

Manuals for 2700 Vertistrip

Manual Number	Manual Type
F-1201	Operator’s Manual
F-1202	Parts Manual

DANGER

DO NOT operate or perform any maintenance tasks on this equipment until you have completed the following:

1. **Receive proper training to operate this equipment safely.**
2. **Read and understand the operator's manual.**
3. **Be thoroughly trained on inspection and repair procedures.**

Failure to comply with this warning may result in serious injury or possibly death.

Table of Contents

1 Introduction and Safety Information

Understanding Safety Statements 1-2
Transporting Safety 1-3
Attaching, Detaching, and Storage 1-3
Maintenance Safety 1-3
High Pressure Fluid Safety 1-3
Protective Equipment 1-3
Chemical Safety 1-3
Prepare for Emergencies 1-4
Tire Safety 1-4
Safety Chain 1-4
Safety Decals and Reflectors 1-5

2 Specifications

Introduction 2-1
Owner Assistance 2-1
Warranty Registration 2-1
General Torque Specifications 2-4
Hydraulic Fitting Torque Specifications 2-5
Model Specifications 2-6
- Model 2700 Vertistrip 2-6
- Tire Inflation 2-6
- Specific Bolt Torque 2-6

Row Unit Placement 2-7

3 Assembly Instructions

Assembly Safety 3-1
Check/Change 3-Point Hitch Pin Configuration 3-2

4 Operation

Tractor Preparation 4-2
2700 Vertistrip Preparation 4-2
Park Stands 4-3
Hydraulic Fold System 4-4
Wing Transport Position 4-5
Wing Field Position 4-6
Leveling Side To Side 4-7
Leveling Front To Rear 4-8
Compressor Operation 4-9
Front Coulter Depth Adjustment 4-10
Row Cleaner Blade Positioning 4-10
Dual Coulter Depth Adjustment 4-11
Bermer Coulter Adjustment 4-11
Knife Depth Adjustment 4-12
Flat Finishing Reel Adjustment 4-12

Loup Monitor. 4-13
Loup Monitor Operation 4-13

5 Maintenance and Lubrication

Hydraulic Maintenance 5-1
Parking 5-1
Lubrication Maintenance 5-2
Storage 5-4

6 Troubleshooting Guide

Chapter 1

Introduction and Safety Information

The Landoll Model 2700 Vertistrip is a quality product designed to give years of trouble free performance. By following each section of this manual, your system will perform as designed for you and your operation.

CHAPTER 1 Gives basic instructions on the use of this manual and understanding the safety statements.

CHAPTER 2 Gives product specifications for the equipment. These specifications supply lengths and measures for your equipment. A Standard Bolt Torque Table is provided to give guidelines for bolt torques to be used when servicing this product.

CHAPTER 3 Contains assembly instructions for your equipment. When these procedures are correctly followed, your equipment should provide you years of trouble-free operation and service.

CHAPTER 4 Instructs how to operate your equipment before using it, and describes adjustments needed.

CHAPTER 5 Instructs how to operate your equipment before using it, and describes adjustments needed. Gives practical advice for the care and maintenance of your Landoll equipment. Drawings in this section locate adjustment points on the equipment.

IF YOU HAVE ANY QUESTIONS CONTACT:
LANDOLL COMPANY, LLC
1900 NORTH STREET
MARYSVILLE, KANSAS 66508

PHONE # (785) 562-5381 or (800) 428-5655
OR
FAX # (888) 527-3909

CHAPTER 6 Is a troubleshooting guide to aid in diagnosing and solving problems with the equipment.

PARTS LIST Is a separate manual showing the various assemblies, subassemblies, and systems. Refer to that manual when ordering Landoll replacement parts. Order parts from your Landoll dealer.

WARRANTY To be eligible for Warranty, registration must be on file at Landoll Company, LLC. It is the responsibility of the dealer to register the machine within 10 days of purchase or lease on the Dealer Portal. Check with the dealer to verify the machine has been registered.

NOTE: IMPROPER ASSEMBLY, MODIFICATION, OR MAINTENANCE OF YOUR LANDOLL MACHINE CAN VOID YOUR WARRANTY.

COMMENTS Address comments or questions regarding this publication to:

LANDOLL COMPANY, LLC
1900 NORTH STREET
MARYSVILLE, KANSAS 66508
ATTENTION: PUBLICATIONS - DEPT. 55

Understanding Safety Statements

You will find various types of safety information on the following pages and on the machine signs (decals) attached to the machine. This section explains their meaning.



The Safety Alert Symbol means ATTENTION! YOUR SAFETY IS INVOLVED!

NOTE

Means that failure to follow these instructions could cause damage to the equipment or cause it to operate improperly.

NOTICE

Special notice - read and thoroughly understand.

CAUTION

Caution means serious equipment or other property damage can occur if instructions on this label are not properly followed.

WARNING

Warning means serious injury or death can occur if safety measures or instructions on this label are not properly followed.

DANGER

Danger means a life-threatening situation exists. Death can occur if safety measures or instructions on this label are not properly followed.

NOTE

Make sure you read and understand the information contained in this manual and on the machine signs (decals) before you attempt to operate or maintain this machine.

e safety statements contained in this manual relate to the operation of the Model 2700 Vertistrip.

1. Examine safety decals and be sure you have the correct safety decals for the implement.
2. Keep these signs clean so they can be observed readily. It is important to keep these decals cleaned more frequently than the implement. Wash with soap and water or a cleaning solution as required.
3. Replace decals that become damaged or lost. Also, be sure that any new implement components installed during repair include decals which are assigned to them by the manufacturer.
4. When applying decals to the implement, be sure to clean the surface to remove any dirt or residue. Where possible, sign placement should protect the sign from abrasion, damage, or obstruction from mud, dirt, oil etc.

Transporting Safety

IMPORTANT

It is the responsibility of the owner/operator to comply with all state and local laws.

1. Do not tow an implement that, when fully loaded, weighs more than 1.5 times the weight of the towing vehicle.





DANGER

- **Do not allow anyone to ride on the tractor or implement. Riders could be struck by foreign objects or thrown from the implement.**
- **Never allow children to operate equipment.**
- **Keep bystanders away from implement during operation.**

2. Carry reflectors or flags to mark the tractor and implement in case of breakdown on the road.
3. Do not transport at speeds over 20 MPH under good conditions. Never travel at a speed which does not allow adequate control of steering and stopping. Reduce speed if towed load is not equipped with brakes.
4. Avoid sudden stops or turns because the weight of the implement may cause the operator to lose control of the tractor.
5. Use caution when towing behind articulated steering tractors; fast or sharp turns may cause the implement to shift sideways.
6. Keep clear of overhead power lines and other obstructions when transporting. Know the transport height and width of your implement.

Attaching, Detaching, and Storage

1. Do not stand between the tractor and implement when attaching or detaching implement unless both are not moving.
2. Chock the tires of the implement so it will not roll when unhitched from the tractor.
3. Store in an area where children normally do not play.

Maintenance Safety

1. Understand the procedure before doing the work. Use proper tools and equipment.
2. Make sure all moving parts have stopped.
3. Do not make adjustments or lubricate implement while it is in motion.
4. Block the implement so it will not roll when working on or under it to prevent injury.

High Pressure Fluid Safety

1. Escaping fluid under pressure can be nearly invisible and have enough force to penetrate the skin causing serious injury. Use a piece of cardboard, rather than hands, to search for suspected leaks.
2. Any fluid injected into the skin must be surgically removed within a few hours or gangrene may result.
3. Avoid the hazard by relieving pressure before disconnecting hydraulic lines.

Protective Equipment

1. Wear protective clothing and equipment.
2. Wear clothing and equipment appropriate for the job. Avoid loose fitting clothing.





3. Because prolonged exposure to loud noise can cause hearing impairment or hearing loss, wear suitable hearing protection, such as earmuffs or earplugs.

Chemical Safety

1. Agricultural chemicals can be dangerous. Improper use can seriously injure persons, animals, plants, soil and property.
2. Read chemical manufactures instructions and store or dispose of unused chemicals as specified.
3. Handle chemicals with care and avoid inhaling smoke from any type of chemical fire.
4. Store or dispose of unused chemicals as specified by the chemical manufacturer.

Prepare for Emergencies

1. Keep a First Aid Kit and Fire Extinguisher handy.
2. Keep emergency numbers for doctor, ambulance, hospital, and fire department near the phone.

Tire Safety

1. Tire changing can be dangerous and should be performed by trained personnel using correct tools and equipment.
2. When inflating tires, use a clip-on chuck and extension hose long enough to allow you to stand to one side, not in front of or over the tire assembly. Use a safety cage if available.
3. When removing and installing wheels use wheel-handling equipment adequate for the weight involved.

Safety Chain

1. Use a chain with a strength rating equal to or greater than the gross weight of towed machinery, which is 10,100 pounds minimum in accordance with ASAE S338.2 specifications. If two or more implements are pulled in tandem, a larger chain may be required. Chain capacity must be greater then the TOTAL weight of all towed implements.
2. A second chain should be used between each implement.
3. Attach the chain to the tractor drawbar support or specified anchor location. Allow only enough slack in the chain to permit turning. The distance from hitch pin to attachment point or intermediate support point should not exceed 9 inches.
4. Replace the chain if any links or end fittings are broken, stretched or damaged.
5. Do not use a safety chain for towing.

Safety Decals and Reflectors

The 2700 Vertistrip is equipped with all safety signs installed for safe operation.

For you safety:

- Carefully read and follow safety sign directions.
- Keep the safety signs clean and visible.
- Replace damaged, missing, or illegible safety signs.
- Be sure any new equipment or repair parts include safety signs. New safety signs may be ordered from your Landoll dealer. Refer to this section for parts and proper safety sign placement.

To Install new safety signs:

1. Remove the old damaged safety sign if still present.
2. Clean placement area to remove any dirt or grease.
3. Remove backing from new safety sign.
4. Apply the safety sign starting from one end pressing firmly and working across the safety sign being careful not to create any air bubbles.

P/N 2-573-010037

Danger: Folding Wing

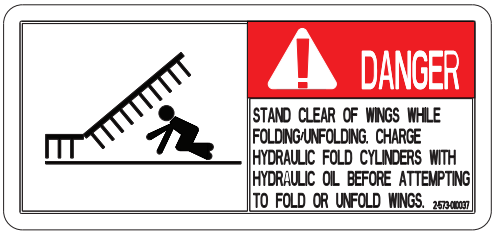

Front of wing frame, both sides.

QTY. 2

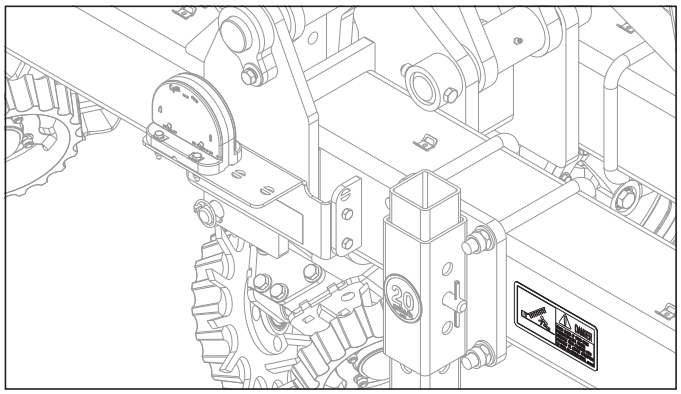

P/N 2-573-010037

Danger: Folding Wing

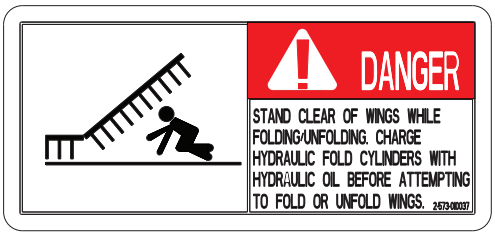

Side of center frame, both sides.

QTY. 2

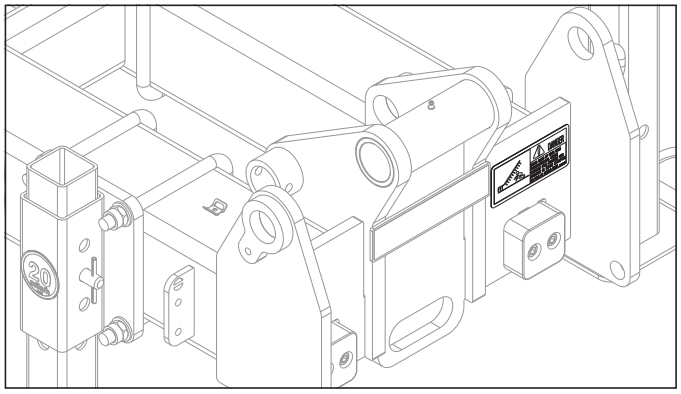

P/N 247227

Danger: Crushing Hazard



Side of center frame, both sides.

QTY. 2

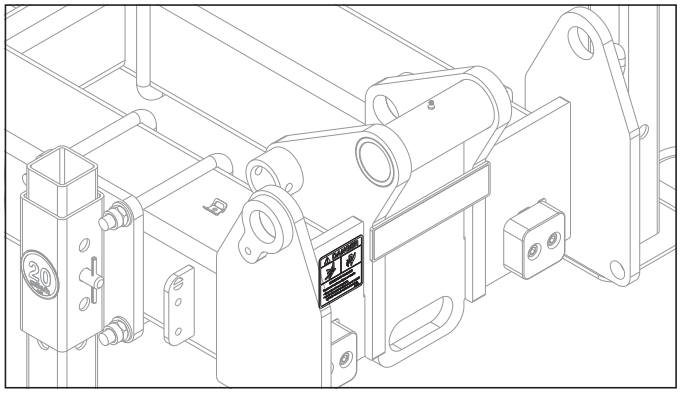

P/N 144193

SIS 20 MPH



Air compressor sheild.

QTY. 1

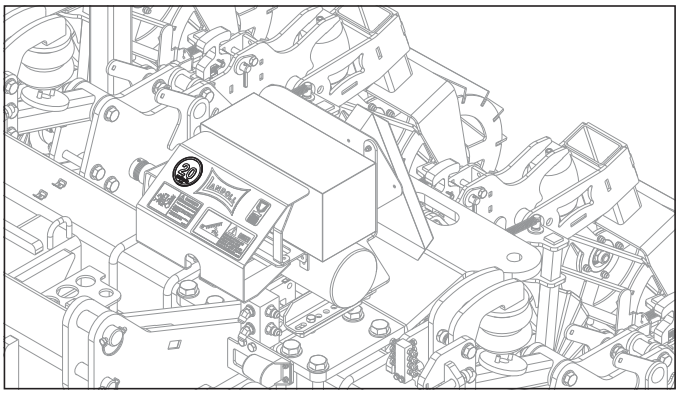

P/N 144193

SIS 20 MPH



Front jack stand bracket, both sides.

QTY. 2

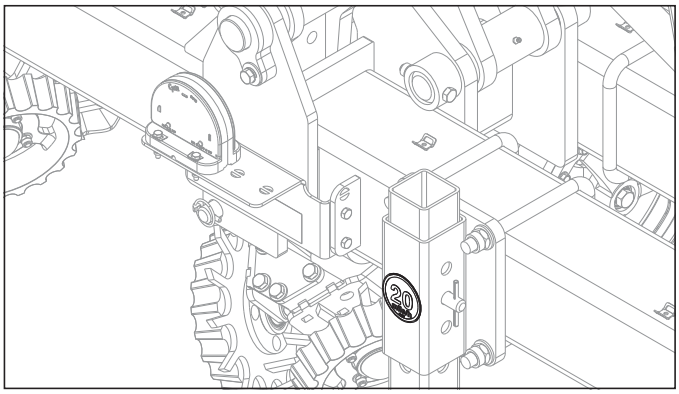

P/N 528934

Yellow Reflector

Amber light bracket, front, both sides.

QTY. 2

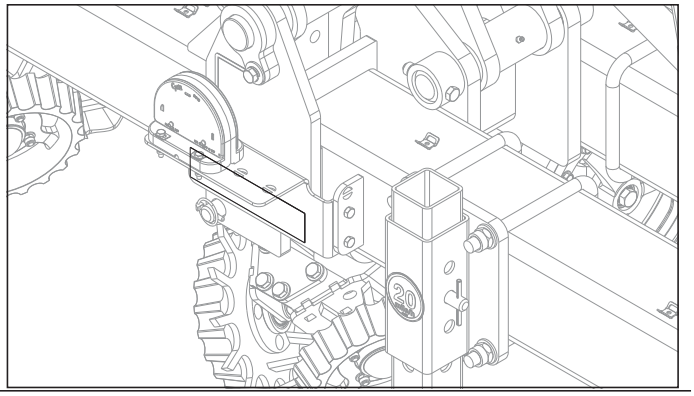

P/N 528934

Yellow Reflector

Side of center frame, both sides.

QTY.2

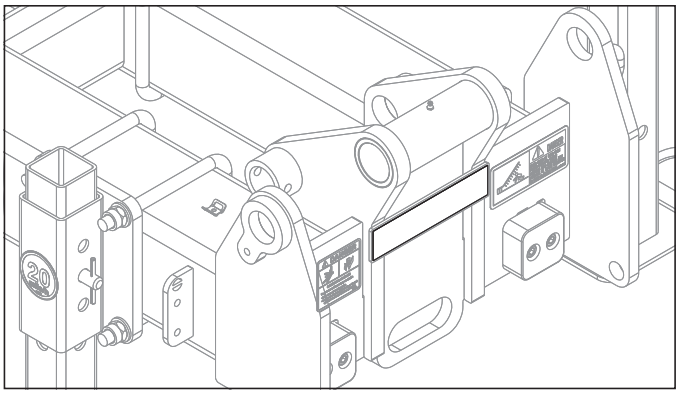

P/N 528933
Red Reflector

Amber light bracket, bottom, rear, both sides.
QTY. 2

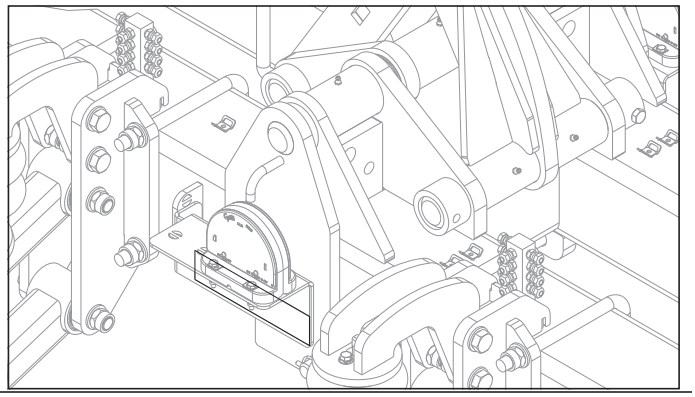

P/N 144193
SIS 20 MPH

Red light bracket, bottom, rear, both sides.
QTY. 2

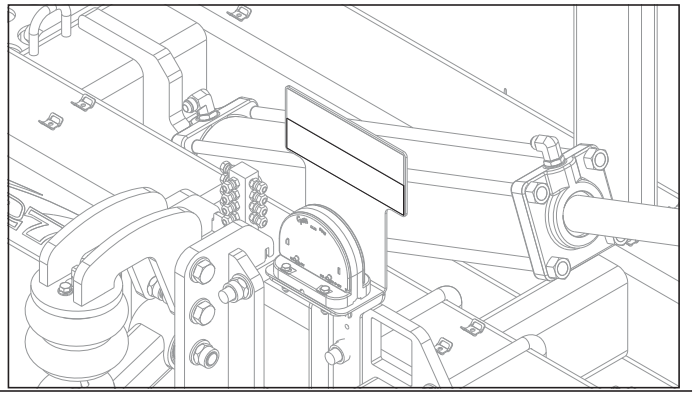

P/N 528938
Orange Reflector

Amber light bracket, top, rear, both sides.
QTY. 2

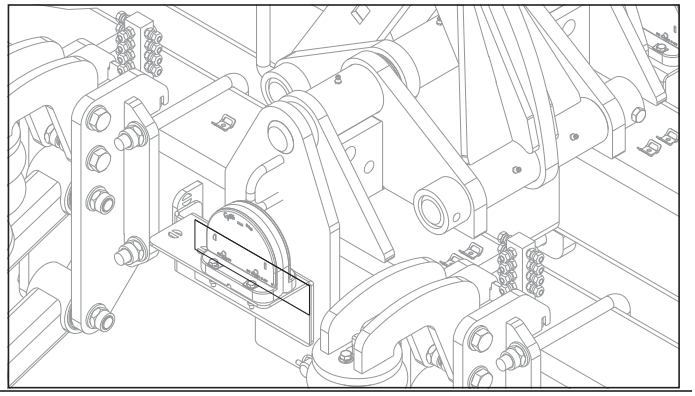

P/N 528938
Orange Reflector

Red light bracket, top, rear, both sides.
QTY. 2

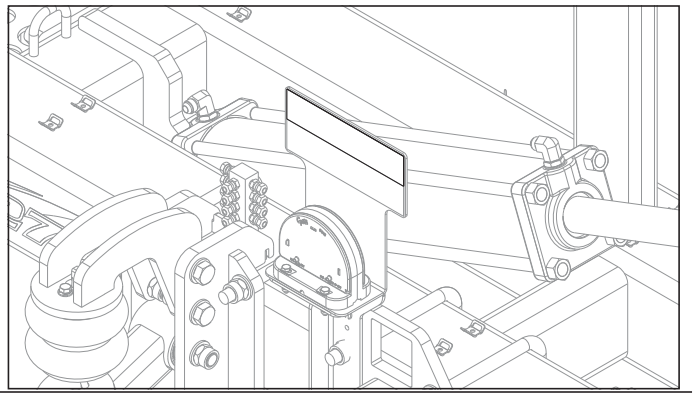

P/N 260471

Jack Stand



Rear of jack stand, both sides.

QTY. 2

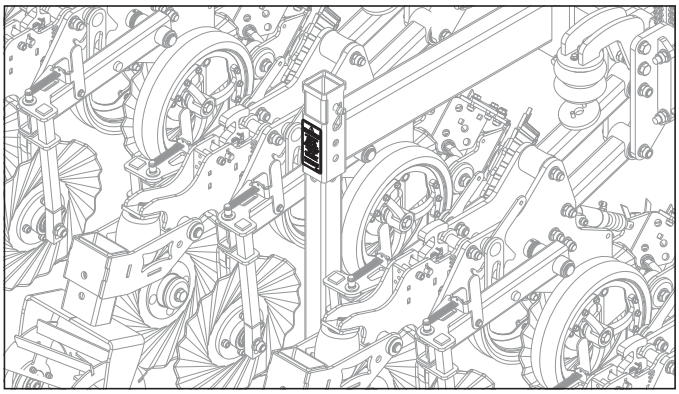

P/N 224589

SIS 20 MPH



Center frame, SIS 20 MPH mount plate, rear.

QTY. 1

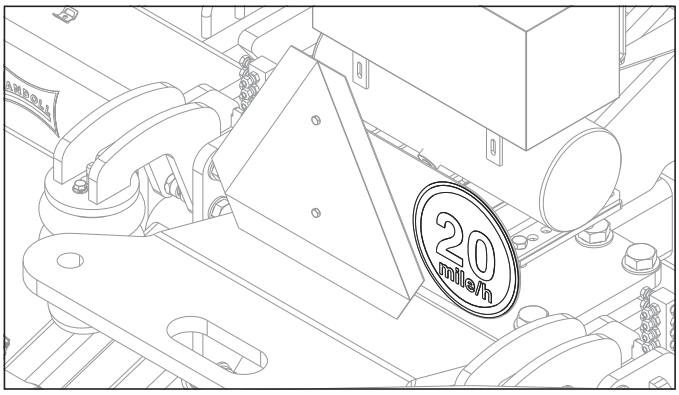

P/N 70260977

SMV Emblem

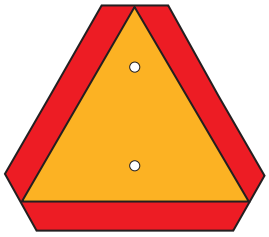

Center frame, SIS 20 MPH mount plate, rear.

QTY. 1

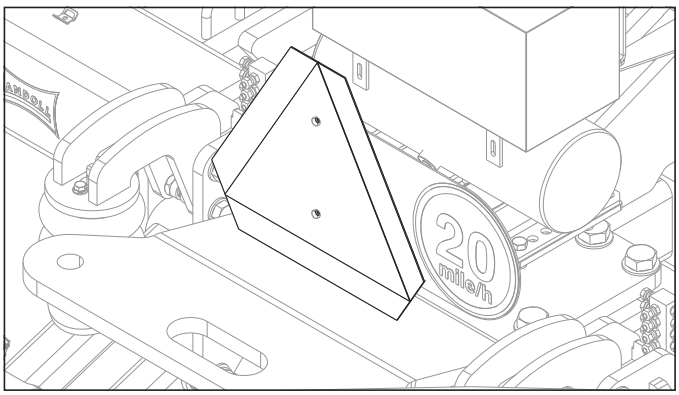

Chapter 2

Specifications

Introduction

This manual is compiled as a guide for owners and operators of the 2700 Vertistrip. Read it carefully so as to be able to follow the suggestions made. Please take time to understand the proper maintenance schedule and SAFE operation of your equipment.

In the event that a new and inexperienced operator is placed in charge of running the equipment, they should read and understand, that part of the manual for proper maintenance and SAFE operation, and to be trained in regard by an experienced operator.

Owner Assistance

If customer service or repairs are needed, contact your Landoll dealer. They have trained personnel, parts and service equipment specially designed for Landoll products. Your machine's parts should only be replaced with Landoll parts. Have the Serial Number and complete Model Number available when ordering parts from your Landoll dealer. ***See Figure 2-1***

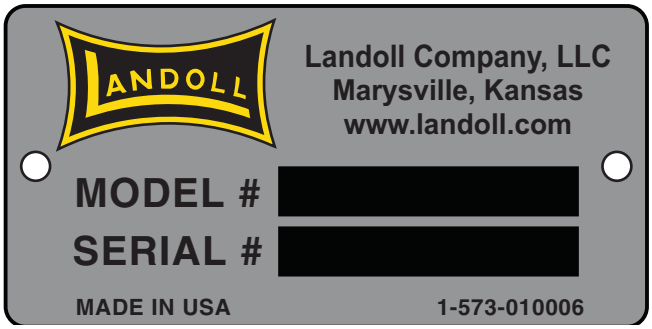

Figure 2-1: Serial Number Plate

Warranty Registration

Be certain to register the machine Online registration at *www.landoll.com* within 10 days of purchase or lease, in order to be on file at Landoll and eligible for Warranty.

Take time to read and understand the Warranty for this product, ***See Page 2-2*** and ***See Page 2-3.***

Landoll reserves the right to make changes and/or add improvements to it's products at any time without obligation to previously manufactured equipment.

Please take time to complete the following information for your personal reference, should you need to contact your Dealer with questions or parts needs.

MODEL_____

SERIAL #_____

DATE OF PURCHASE_____

DEALER NAME_____

We at Landoll wish to thank you for purchasing our product. We have spent considerable time and effort to research, design, test and develop this machine and are confident it will serve you in the use for which it was designed.

LANDOLL TILLAGE PRODUCT THREE YEAR LIMITED WARRANTY

Landoll Company, LLC warrants each new serial numbered Whole Good Tillage product, when properly assembled, adjusted, serviced, and normally operated, to be free from defects in materials and workmanship for a period of three (3) years, unless otherwise noted, from the date of delivery. Date of delivery shall be the date the Dealer places the product in the possession of the original retail purchaser, and must be confirmed by the Dealer submitting a properly completed Landoll Company, LLC Warranty Registration Form to the Landoll Company, LLC Warranty Department. Warranty starts the day the product is rented or leased. This limited warranty shall be transferable until the expiration date.

Landoll Company, LLC shall repair, or at its option, replace any part(s) of the product determined, by Landoll Company, LLC, to be defective. Landoll Company, LLC may request the return of part(s), freight prepaid via a carrier approved by the Landoll Warranty Staff, to Landoll Company, LLC for further evaluation. If the part is determined to be defective, Landoll Company, LLC will refund the freight charges incurred in returning the defective part(s).

This limited warranty requires pre-authorization by the Landoll Company, LLC Warranty Staff of any warranty related utilization of components or labor, and is subject to specific exclusions and does not apply to any product which has been: 1) subjected to or operated in a manner which, at any time, have exceeded the product design limits: 2) repaired or altered outside our factory in any way so as, in the judgment of Landoll Company, LLC, to affect its stability or reliability: 3) subject to misuse, negligence, accident, or has been operated in a manner expressly prohibited in the instructions; or not operated in accordance with practices approved by Landoll Company, LLC. Operating the product in soils containing rocks, stumps or obstructions may void the warranty in its entirety. Excessive acres, consistent with non-seasonal very large farming operations, and, non-agricultural activities, may further limit the terms of this warranty. The sole obligation of Landoll Company, LLC under this warranty shall be limited to repairing or replacing, at its option, part(s) which shall be identified to Landon Company, LLC by way of a pre-authorized Landoll Company, LLC Warranty Claim Form. Warranty, expressed or implied, will be denied on any product not properly registered with the Landoll Company, LLC Warranty Department within ten (10) days of the first retail sale. As stated above, Landoll Company, LLC Warranty Staff will identify components listed on a Warranty Claim required to be returned for further analysis. All parts returned to Landoll Company, LLC must be shipped with a Return Materials Authorization (RMA) provided by the Landoll Company, LLC Warranty Staff. Defective components must be returned by the purchaser to Landoll Company, LLC with transportation and freight charges prepaid within thirty (30) days after receipt of the RMA. The examination conducted by Landoll Company, LLC of returned parts shall disclose to its satisfaction the extent the component may be detective.

All parts and labor warranty MUST be pre-authorized by Landoll Company, LLC Warranty Staff. Failure to do so may result in no warranty payment of any kind. Labor will be reimbursed in accordance with published shop rates pre-approved by the Landoll Company, LLC Warranty Staff. Time authorized for specific work will be limited, where appropriate, to the hours listed in the Landoll Company, LLC authorized Labor Rate Guide.

...continued on following page.

Figure 2-2: Landoll Tillage Product Warranty (1 of 2)

LANDOLL TILLAGE PRODUCT THREE YEAR LIMITED WARRANTY

...continued from previous page.

USER'S OBLICATION:

1. Read the Operator's Manual.
2. Understand the safe and correct operating procedures pertaining to the operation of the product.
3. Lubricate and maintain the product according to the maintenance schedule in the Operator's Manual.
4. Inspect machine and have parts repaired or replaced when continued use of the product would cause damage or excessive wear to other parts.
5. Contact the Landoll Company, LLC Dealer for repair or replacement of defective parts. Mileage incurred by the Landoll Company, LLC Dealer is the customer's responsibility.

This 3-Year Limited Warranty SHALL NOT APPLY TO: (See Warranty Procedure Manual for details.)

1. Ground Engaging Tools.
2. Vendor Warranty Only Parts.

WARRANTY LABOR:

1. Considered during the first year of warranty only.
2. During the second and third year:
   - Warranty labor is not covered. Customer is resposible for removing, replacing and returning the defective part(s) to the Landoll Dealer

THIS WARRANTY IS EXPRESSIVELY IN LIEU OF ALL OTHER WARRANTIES OF MATERIAL, WORKMANSHIP DESIGN, APPLICATION OR OTHERWISE WITH RESPECT TO ANY EQUIPMENT, WHETHER EXPRESS, IMPLIED OR STATUTORY, INCLUDING WARRANTIES OF MERCHANTABILITY AND FITNESS FOR A PARTICULAR PURPOSE, AND LANDOLL COMPANY, LLC SHALL NOT BE LIABLE FOR SPECIAL OR CONSEQUENTIAL DAMAGES OF ANY KIND ON ACCOUNT OF ANY LANDOLL PRODUCT. NO EMPLOYEE OR REPRESENTATIVE IS AUTHORIZED TO CHANGE THIS WARRANTY, VERBALLY OR IN WRITING, OR GRANT ANY OTHER WARRANTY. LANDOLL COMPANY, LLC, WHOSE POLICY IS ONE OF CONTINUOUS IMPROVEMENT, RESERVES THE RIGHT TO MAKE CHANGES WITHOUT OBLIGATION TO MODIFY PREVIOUSLY PRODUCED EQUIPMENT.

This warranty does not expand, enlarge upon or alter in any way, the warranties provided by the original manufacturers and suppliers of component parts and accessories. This warranty excludes such parts or accessories which are not defective, but may wear out and have to be replaced during the warranty period, including, but not limited to, light bulbs, paint, and the like. (Tire Warranties are expressly excluded from Landoll Company, LLC warranty herein.) Purchaser is expected to pay all repairs or replacement costs, in connection with this Agreement, including sales and other taxes immediately upon completion of work performed.

LIMITATION OF LIABILITY: Landoll Company, LLC shall not be liable to purchaser for any incidental or consequential damages suffered by the purchaser, including, but not limited to, any commercially reasonable charges, expenses or commissions incurred in connection with effecting cover or any other reasonable expense incident to the delay or other breach of warranty by Landoll Company, LLC, loss of anticipated profits, transportation expenses due to repairs, non-operation or increased expense of operation costs of purchased or replaced equipment, claim of customers, cost of money, any loss of use of capital or revenue, equipment rental, service trips, or for any special damage or loss of any nature arising at any time or from any cause whatsoever. LIMITATION OF REMEDY: In the event of Landoll Company, LLC failure to repair the product subject to the warranty contained herein, the purchaser's sole and exclusive remedy against Landoll Company, LLC shall be for the repair or replacement of any defective part or parts of the product subject to work or repair within the time period and manner set forth herein. This exclusive remedy shall not be deemed to have failed of its essential purpose so long as Landoll Company, LLC is willing and able to repair or replace defective parts in the prescribed manner.

Figure 2-3: Landoll Tillage Product Warranty (2 of 2)

General Torque Specifications

LANDOLL
FASTENER TORQUE SPECIFICATIONS
(Rev. 23/04)

This chart provides general torque specifications for Standard Nuts and Caps Screws (as received condition) that are not called out on processes or drawings.

This **DOES NOT** apply if special lubrication such as graphite moly-disulfide or other extreme pressure lubricants are used.

Add 33% to the listed torque specification if the fastener is dry (solvent cleaned).

Cap screw grades are indicated by markings on the head, these vary among manufacturers.

Thick Nuts must be used on grade 8 cap screws.

SAE TORQUE SPECIFICATIONS (FOOT-POUNDS)

[ ] Indicates specifications for Prevailing Torque Nuts.

UNC Size	Grade 2	Grade 5	Grade 8
1/4 - 20	4 [5]	6 [7]	9 [11]
5/16 - 18	8 [10]	13 [16]	18 [22]
3/8 - 16	15 [19]	23 [29]	35 [43]
7/16 - 14	24 [30]	35 [43]	55 [62]
1/2 - 13	35 [43]	55 [62]	80 [100]
9/16 - 12	55 [62]	80 [100]	110 [137]
5/8 - 11	75 [94]	110 [137]	170 [212]
3/4 - 10	130 [162]	200 [250]	280 [350]
7/8 - 9	125 [156]	320 [400]	460 [575]
1 - 8	190 [237]	408 [506]	680 [850]
1-1/8 - 7	270 [337]	600 [750]	960 [1200]
1-1/4 - 7	380 [475]	840 [1050]	1426 [1782]
1-3/8 - 6	490 [612]	1100 [1375]	1780 [2225]
1-1/2 - 6	650 [812]	1460 [1825]	2360 [2950]

See back side for SAE UNF and Metric torques.

Form No. F-257-0322

SAE TORQUE SPECIFICATIONS (FOOT POUNDS)

[ ] Indicates specifications for Prevailing Torque Nuts.

UNF Size	Grade 2	Grade 5	Grade 8
1/4 - 28	5 [6]	7 [9]	10 [12]
5/16 - 24	9 [11]	14 [17]	20 [25]
3/8 - 24	17 [21]	25 [31]	35 [44]
7/16 - 20	27 [34]	40 [50]	60 [75]
1/2 - 20	40 [50]	65 [81]	90 [122]
9/16 - 18	60 [75]	90 [112]	130 [162]
5/8 - 18	85 [106]	130 [162]	180 [225]
3/4 - 16	150 [188]	220 [275]	320 [400]
7/8 - 14	140 [175]	360 [450]	500 [625]
1 - 14	210 [263]	540 [675]	760 [950]
1-1/8 - 12	300 [375]	660 [825]	1080 [1350]
1-1/4 - 12	420 [525]	920 [1150]	1500 [1875]
1-3/8 - 12	560 [700]	1260 [1575]	2010 [2512]
1-1/2 - 12	730 [912]	1640 [2050]	2660 [3325]

METRIC TORQUE SPECIFICATIONS

This chart provides torque specification for phosphate coated, Rockwell "C" 38-45 Metric Coarse Thread Class 10.9 Fasteners, Class 10.0 Nuts and Harden Flat Washers.

[ ] Indicates specifications for Prevailing Torque Nuts.

MM Size	Newton - Meters	Foot-Pounds
6	10 [14]	7 [10]
7	16 [22]	12 [16]
8	23 [32]	17 [24]
10	46 [60]	34 [47]
12	80 [101]	60 [75]
14	125 [155]	90 [115]
16	200 [240]	150 [180]
18	275 [330]	205 [245]
20	385 [450]	290 [335]
24	670 [775]	500 [625]
27	980 [1105]	730 [825]
30	1330 [1470]	990 [1090]
33	1790 [1950]	1730 [1870]
36	2325 [2515]	1730 [1870]
39	3010 [3210]	2240 [2380]

See front side for SAE UNC and notes.

Figure 2-4: General Torque Specifications

Hydraulic Fitting Torque Specifications

LANDOLL
HYDRAULIC FITTING TORQUE SPECIFICATIONS (REV. 23/04) AEROQUIP BRAND FITTINGS 37° JIC; ORS & ORB

This chart provides torque specifications for Plated Carbon Steel and Stainless Steel Fittings (as received condition) that are not called out on processes or drawings.

This **DOES NOT** apply if special lubrication such as graphite moly-disulfide or other extreme pressure lubricants are used.

Minus 65% from the listed torque specification for Brass Fittings.

TORQUE SPECIFICATIONS (FOOT-POUNDS)

[ ] Indicates specifications for Prevailing Torque Nuts.

DASH Size	37 Degree JIC	O-Ring (ORS)	O-Ring Boss (ORB)
-4	11-12	10-12	14-16
-5	15-16	-----	18-20
-6	18-20	18-20	24-26
-8	38-42	32-35	50-60
-10	57-62	46-50	72-80
-12	79-87	65-70	125-135
-14	-----	-----	160-180
-16	108-113	92-100	200-220
-20	127-133	125-140	240-280
-24	158-167	150-165	270-360
-32	245-258	-----	-----

FORM NO. F-263-2304 (1 of 3)

LANDOLL
HYDRAULIC FITTING TORQUE SPECIFICATIONS (REV. 23/04) GATES BRAND FITTINGS 37° JIC; ORS & ORB

This chart provides torque specifications for Plated Carbon Steel and Stainless Steel Fittings (as received condition) that are not called out on processes or drawings.

This **DOES NOT** apply if special lubrication such as graphite moly-disulfide or other extreme pressure lubricants are used.

Minus 65% from the listed torque specification for Brass Fittings.

TORQUE SPECIFICATIONS (FOOT-POUNDS)

[ ] Indicates specifications for Prevailing Torque Nuts.

DASH Size	37 Degree JIC	O-Ring (ORS)	O-Ring Boss (ORB)
-4	10-11	10-12	14-16
-5	13-15	-----	-----
-6	17-19	18-20	24-26
-8	34-38	32-40	37-44
-10	50-56	46-56	50-60
-12	70-78	65-80	75-83
-14	-----	65-80	-----
-16	94-104	92-105	111-125
-20	124-138	125-140	133-152
-24	156-173	150-180	156-184
-32	219-243	-----	-----

FORM NO. F-263-2304 (2 of 3)

LANDOLL
HYDRAULIC FITTING TORQUE SPECIFICATIONS (REV. 23/04) PARKER BRAND FITTINGS 37° JIC; ORS & ORB

This chart provides torque specifications for Plated Carbon Steel and Stainless Steel Fittings (as received condition) that are not called out on processes or drawings.

This **DOES NOT** apply if special lubrication such as graphite moly-disulfide or other extreme pressure lubricants are used.

Minus 65% from the listed torque specification for Brass Fittings.

TORQUE SPECIFICATIONS (FOOT-POUNDS)

[ ] Indicates specifications for Prevailing Torque Nuts.

DASH Size	37 Degree JIC	O-Ring (ORS)	O-Ring Boss (ORB)
-4	11-13	15-17	13-15
-5	14-16	-----	21-23
-6	20-22	34-36	25-29
-8	43-47	58-62	40-44
-10	55-65	100-110	58-62
-12	80-90	134-146	75-85
-14	-----	-----	-----
-16	115-125	202-218	109-121
-20	160-180	248-272	213-237
-24	185-215	303-327	238-262
-32	250-290	-----	310-340

FORM NO. F-263-2304 (3 of 3)

Figure 2-5: Hydraulic Fitting Torque Specifications

Model Specifications

Model 2700 Vertistrip						
Model Number	Number of Rows	*Unit Height	Transport Width			Estimated Weight
2730-8 x 30”	8 on 30”	N/A	N/A			N/A
2730-12 x 30”	12 on 30”	9’ - 2”	17’ - 3”			11,700lbs.
2730-16 x 22”	16 on 22”	9’ - 2”	17’ - 3”			14,300lbs.
2730-16 x 30”	16 on 30”	10’ - 8”	19’ - 9”			15,500lbs.

***Unit Height is measured with unit setting on ground to the highest point. 3 pt. lift height not included.**

Tire Inflation			
Tire Size	Tire Manufacturer	Ply/Load Rating	Inflation Pressure (psi)

Specific Bolt Torque	
Lug Bolts & Nuts	Torque (Ft-Lbs)

Row Unit Placement

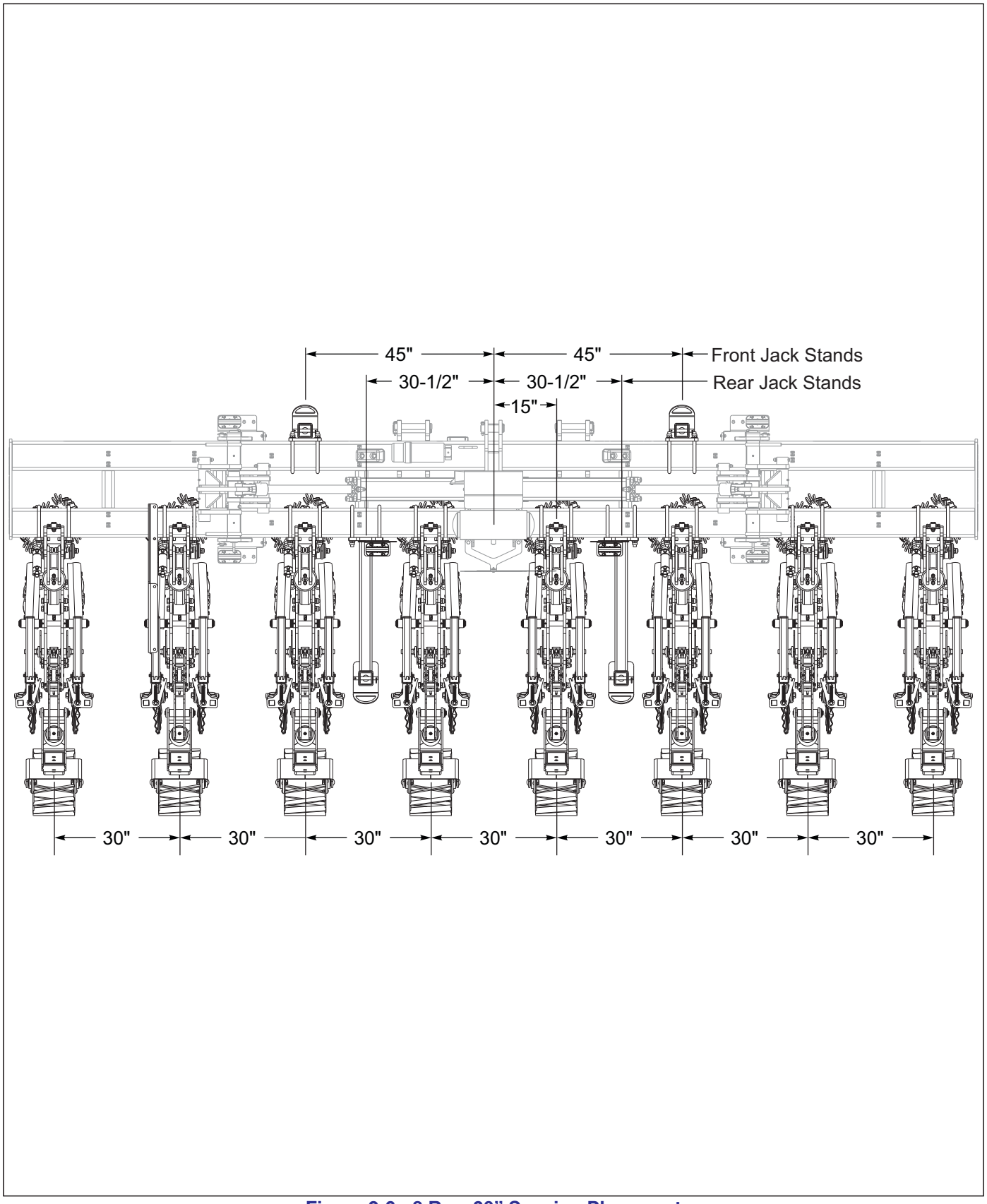

Figure 2-6: 8 Row 30” Spacing Placement

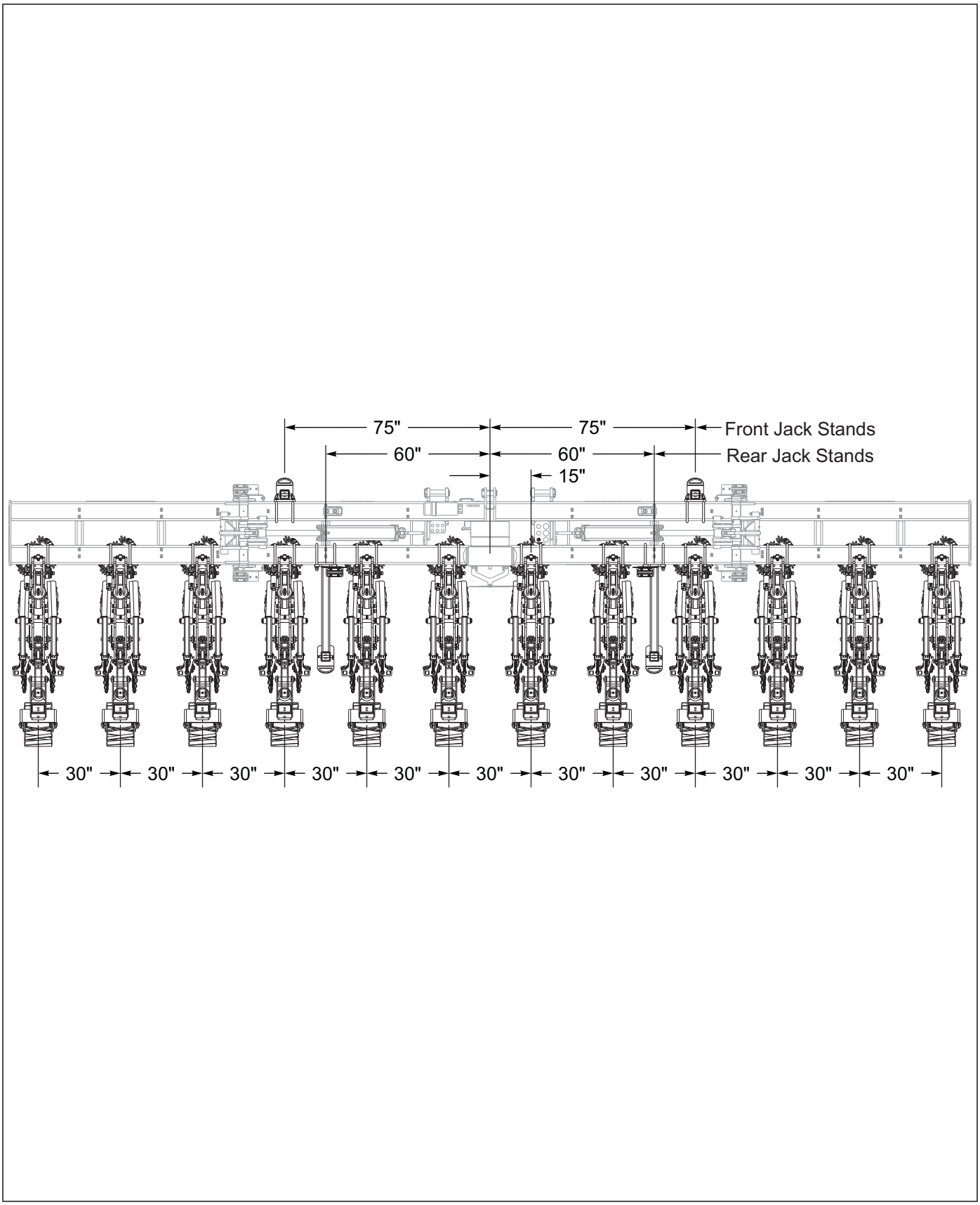

Figure 2-7: 12 Row 30” Spacing Placement

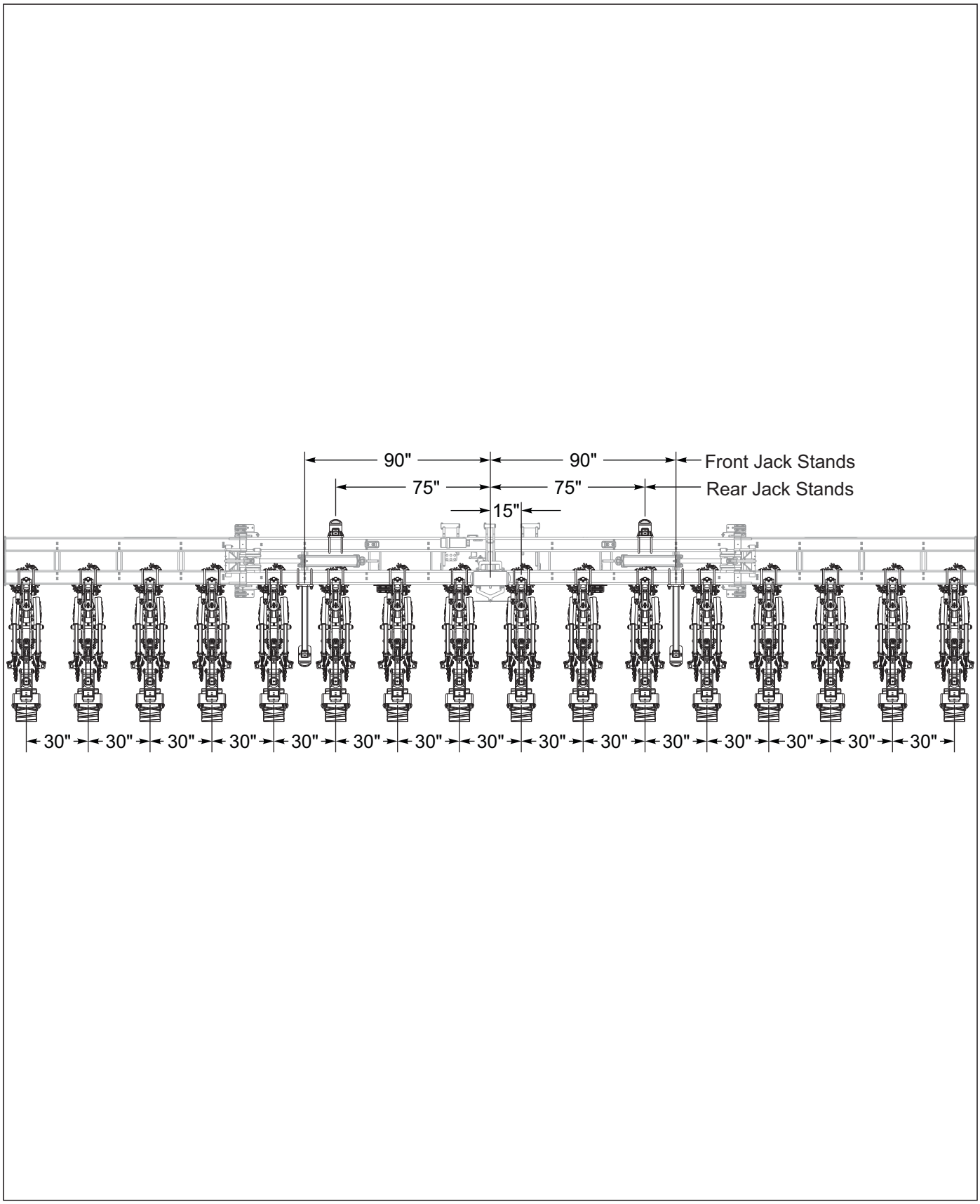

Figure 2-8: 16 Row 30” Spacing Placement

Table provided for general use.

NOTES:

Chapter 3

Assembly Instructions

Assembly Safety

Your new 2700 Vertistrip comes nearly completely assembled from the factory and ready to go to the field. This section includes press wheel and option assembly procedures.

To insure alignment of assemblies, **leave the nuts loose until completion** of final assembly. Use lock washers or flat washers as specified. Spread all cotter pins.

After completion of final assembly, tighten all nuts evenly to prevent misalignment, distortion or binding. Tighten all screws and nuts to the recommended torques **(SEE PAGE 2-4)**.

DANGER

Opener blades are extremely sharp. Exercise extreme care when working on or near opener blades. Do not allow opener blades to roll over or fall onto any body part. Do not allow wrenches to slip when working near blades. Never push wrenches toward opener blades. Do not climb over machine above opener blades. Failure to stay clear of opener blade edges can cause serious personal injury or death.

WARNING

Do not attempt to lift heavy parts (such as the frame, wheel lift, and pull hitch) manually. Use a hoist or a forklift to move these parts into position.

DANGER

To prevent accidental lowering:

- **All hydraulically elevated equipment must be locked out using the cylinder lockouts.**
- **Lower equipment to the ground while servicing or when it is idle.**
- **Failure to take measures to prevent accidental lowering may result in serious personal injury or death.**

CAUTION

Be sure to bleed the hydraulic system of all air in lines after installation. Failure to bleed the system of all air can result in improper machine operation.

Check/Change 3-Point Hitch Pin Configuration

1. The 3-point hitch pins will be shipped out in locations shown ***See Figure 3-1***.

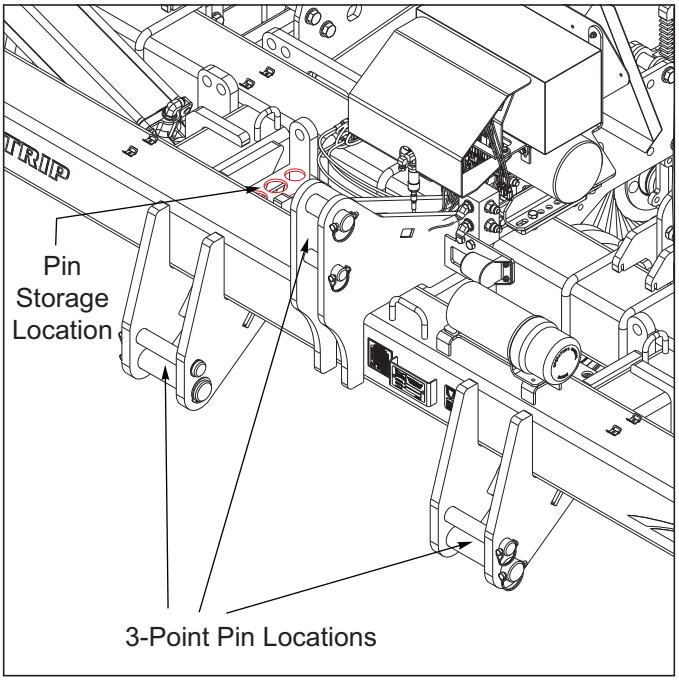

Figure 3-1: 3-Point Pins Shipping Location

2. For category 3 hitch setup the category 4 pins will need removed and stored ***See Figure 3-2***.

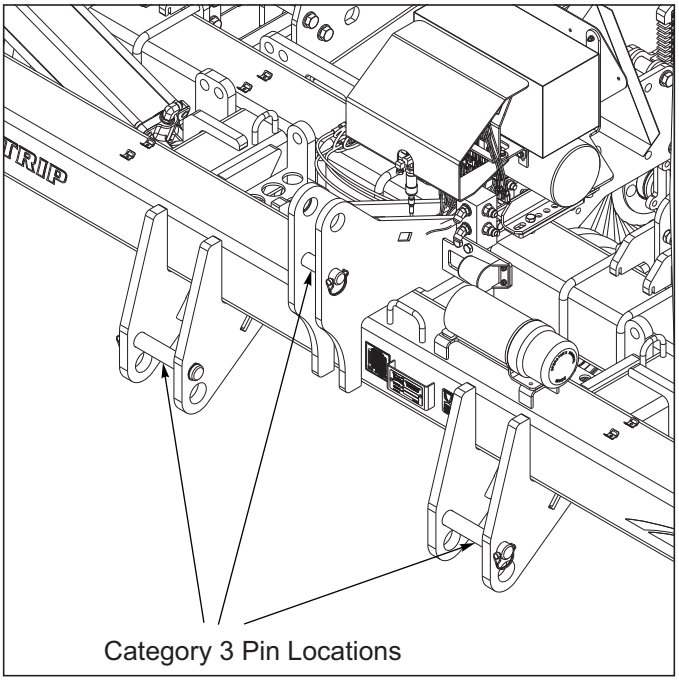

Figure 3-2: Category 3 Pin Locations

3. For category 4 hitch setup the category 3 pins will need removed and stored ***See Figure 3-3***.

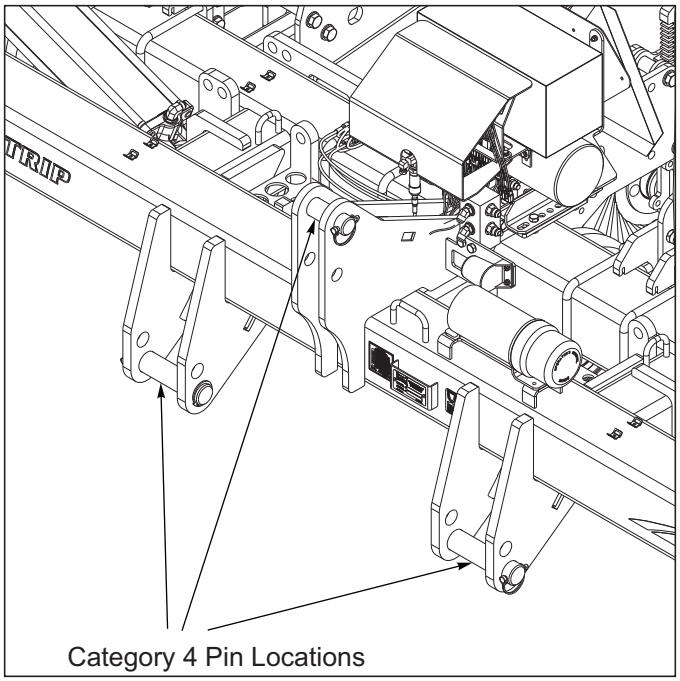

Figure 3-3: Category 4 Pin Locations

Chapter 4

Operation

DANGER

Never allow anyone to ride on the2730 Vertistrip at any time. Allowing a person to ride on the machine can inflict serious personal injury or death to that person.

DANGER

Opener blades are extremely sharp. Exercise extreme care when working on or near opener blades. Do not allow opener blades to roll over or fall onto any body part. Do not allow wrenches to slip when working near blades. Never push wrenches toward opener blades. Do not climb over machine above opener blades. Failure to stay clear of opener blade edges can cause serious personal injury or death.

WARNING

Lower elevated components before servicing or when equipment is idle. Failure to take preventive measures against accidental lowering can result in serious personal injury.

DANGER

Keep all bystanders away from the machine when folding/unfolding, raising/lowering openers, and transporting.

CAUTION

When transporting farm implements on public roads, it is the responsibility of the operator to abide by state and local laws concerning wide loads, speed, safety emblems and safety lighting equipment. Drive at safe speeds, particularly when rounding corners, crossing rough ground or driving on hillsides, to prevent tipping the tractor.

CAUTION

Relieve system air pressure before attempting to adjust or service any air spring component. Make sure all components are in place and secure before charging the system.

DANGER

To prevent injury or death from electrocution: stay away from power lines while transporting, folding, or unfolding markers. Electrocution can occur without direct contact of power lines.

Tractor Preparation

The 2700 Vertistrip is designed to be pulled by tractor equipped with a Category 3 or 4 3-point hitch.

Before attaching the 2700 Vertistrip, prepare the tractor as follows:

1. Inflate the rear tractor tires equally and add ballast according to the tractor operator's manual.

2700 Vertistrip Preparation

1. Prior to operating the 2700 Vertistrip, read and understand the operator's manual and all decals.
2. Inspect the machine thoroughly for good operating condition.
3. Replace worn or missing parts.
4. When the machine is new, check the bolt tightness after a few hours of operation. Tighten any loose nuts or bolts.
5. Lubricate the machine ***See "Storage" on page 5-4.*** **and Figure on page 5-2.**
6. Check that all safety decals and reflectors are correctly located and legible. Replace if damaged.

Attaching 2700 Vertistrip To The Tractor - Three-Point



1. Raise or lower the tractor three-point links as needed.
2. Carefully back the tractor into position.
3. Connect the tractor 3-point lift arms to the lower hitch pins ***See Figure 4-1***. If using a quick hitch, ensure that the pins lock securely.
4. Connect the top link to the upper hitch pin. Front-to-back leveling is performed in later steps.
5. Plug the safety lights into the seven pin connector on the tractor ***See Figure 4-1***.

NOTE

The category 4 pin locations shown for category 3 pin locations See "Check/Change 3-Point Hitch Pin Configuration" on page 3-2.

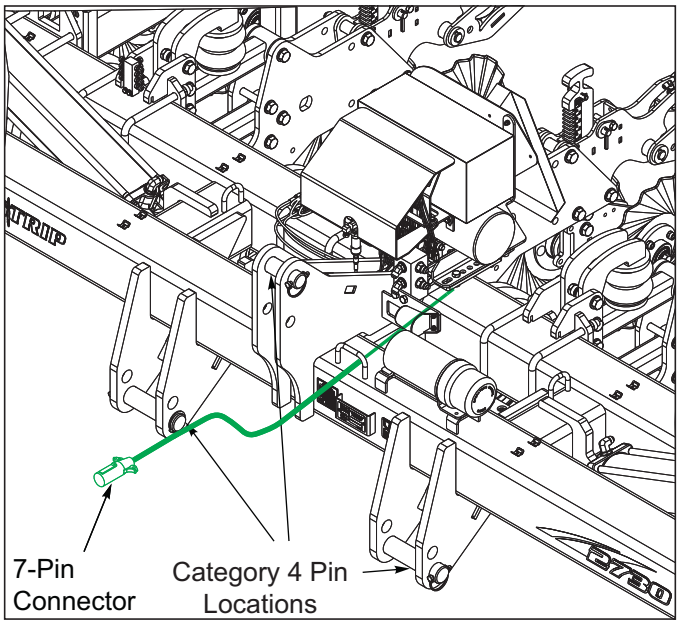

Figure 4-1: Attaching Vertistrip to Tractor

Park Stands

1. Fully raise the Vertistip and remove park stand pins from the storage position ***See Figure 4-2***.

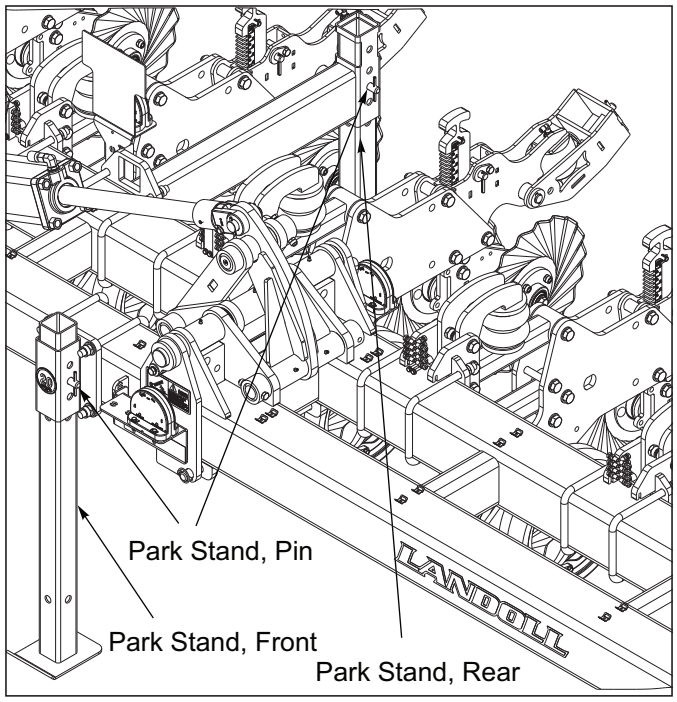

Figure 4-2: Jack Stands Storage Position

1. Slide the front park stands up and re-install the pins to secure the park stand ***See Figure 4-3***.
2. Slide the rear park stands down and lay flat, slide into position shown ***See Figure 4-3*** and re-install the pins to secure the park stand so stands will not contact row units when folded.

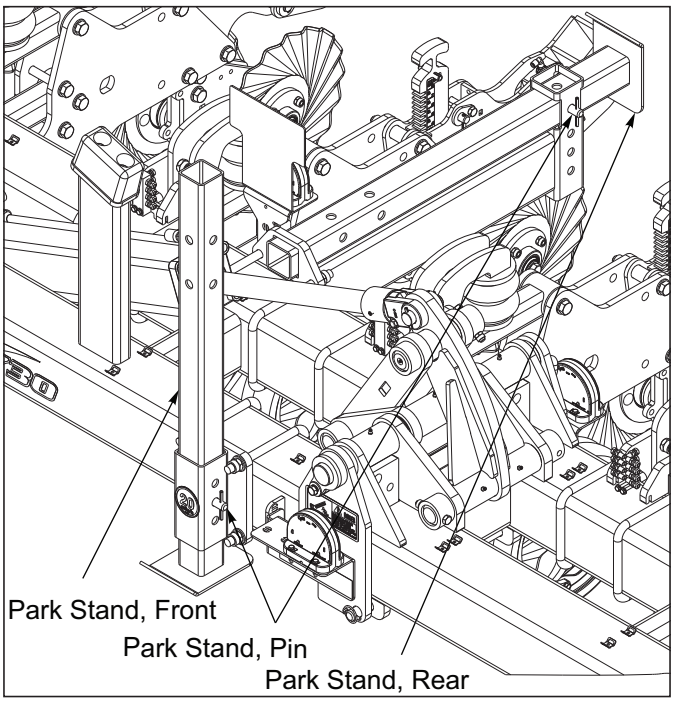

Figure 4-3: Jack Stands Transport/Field Position

Hydraulic Fold System

1. The 2730 Vertistrip is equipped with a hydraulic fold system to raise and lower the wing frames for narrow transport.
2. The machine will be shipped out with the system fully charged with hydraulic oil.
3. Attach the hydraulic fold hoses to tractor. Verify that there are leaks in hydraulic system when folding or unfolding the wings.

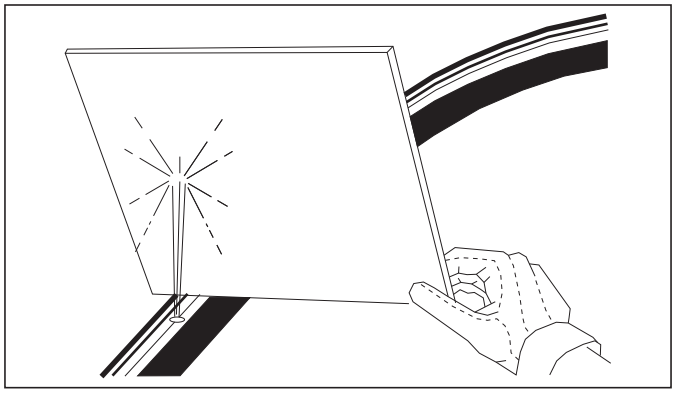

Figure 4-4: Hydraulic Leak Detection

WARNING

Escaping fluid under pressure can penetrate the skin causing serious personnel injury. Avoid the hazard by relieving system pressure before disconnecting hydraulic lines. Tighten all connections before applying pressure. Keep hands and body away from pinholes which eject fluid under high pressure. Wear protective gloves and safety glasses when working with hydraulics. Use a piece of cardboard or paper, not body parts to search/check for leaks. If an accident occurs, see a doctor immediately. Any fluid injected into the skin must be surgically removed within a few hours or gangrene may result.

Wing Transport Position

Unfold the implement for adjustments, field operations, maintenance, parking and storage.

4. To unfold the 2730 Vertistrip, find a level area large enough to accommodate when it is fully unfolded. The tractor should be stopped and not moving while unfolding. Use the tractor 3-point to raise the implement slightly so the row units are off the ground.
5. **BEFORE UNFOLDING** verify that the wing lock pins are not installed and clear all persons from on or near the implement before unfolding the wings ***See Figure 4-5***, both sides.
6. Slowly move fold circuit lever to extend fold cylinders. Observe the unfold operation.
7. Wait for both wings to reach the fully unfolded position ***See Figure 4-6***.. Set tractor remote to Neutral to lock at unfolded.

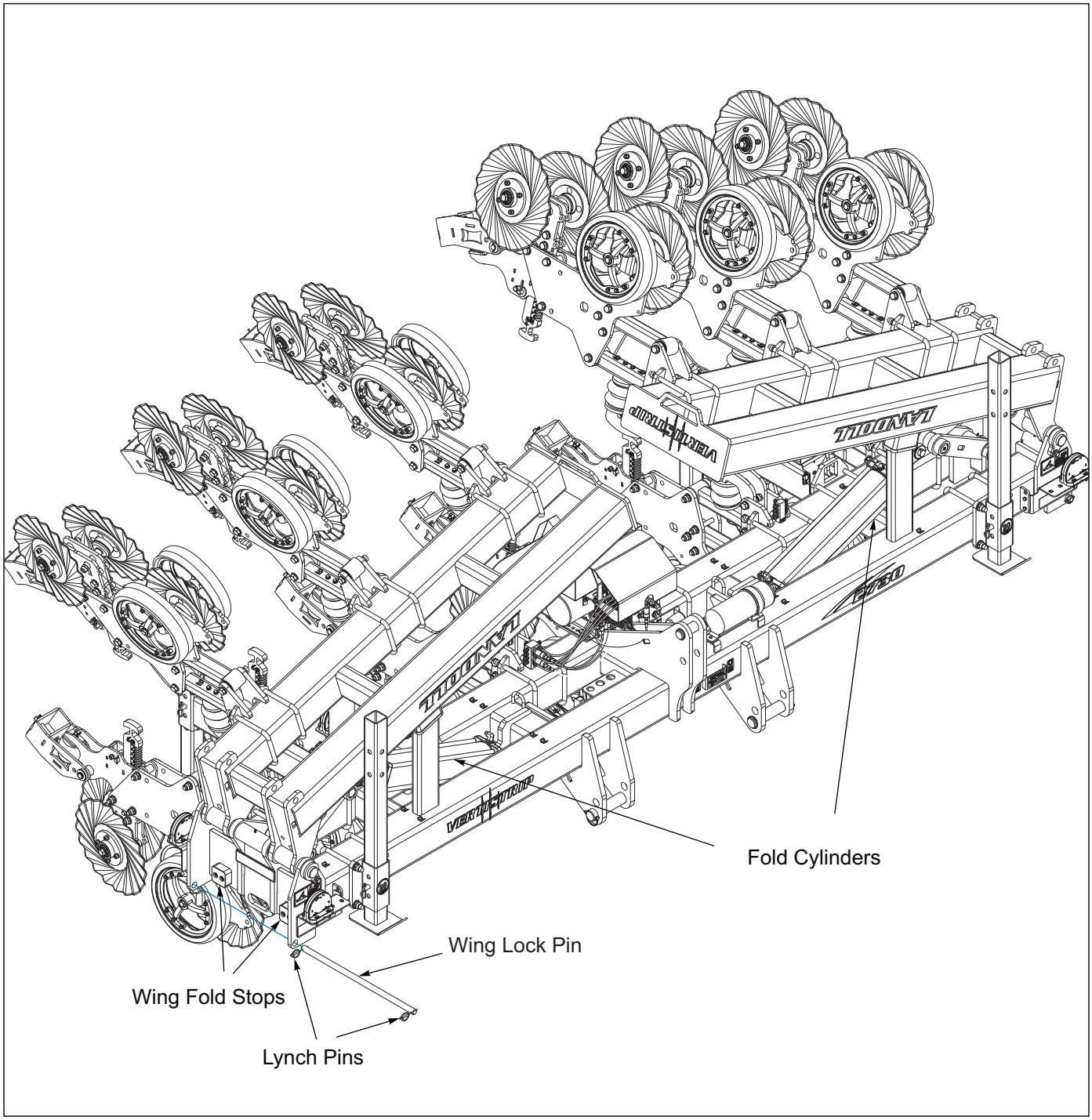

Figure 4-5: Wing Transport Position

Wing Field Position

Fold the implement for movements on public roads, between fields and narrow clearances

8. To fold the 2730 Vertistrip, to level area. Be aware of vertical clearance needed to fold implement.
9. The tractor should be stopped and not moving while unfolding. Use the tractor 3-point to raise the implement slightly so the row units are off the ground.
10. **BEFORE FOLDING** verify that the wing lock pins are not installed and clear all persons from on or near the implement before folding the wings ***See Figure 4-6***, both sides.
11. Slowly move fold circuit lever to retract fold cylinders. Observe the fold operation.
12. Wait for both wings to reach the fully folded position ***See Figure 4-5***. Set tractor remote to Neutral to hold at folded.

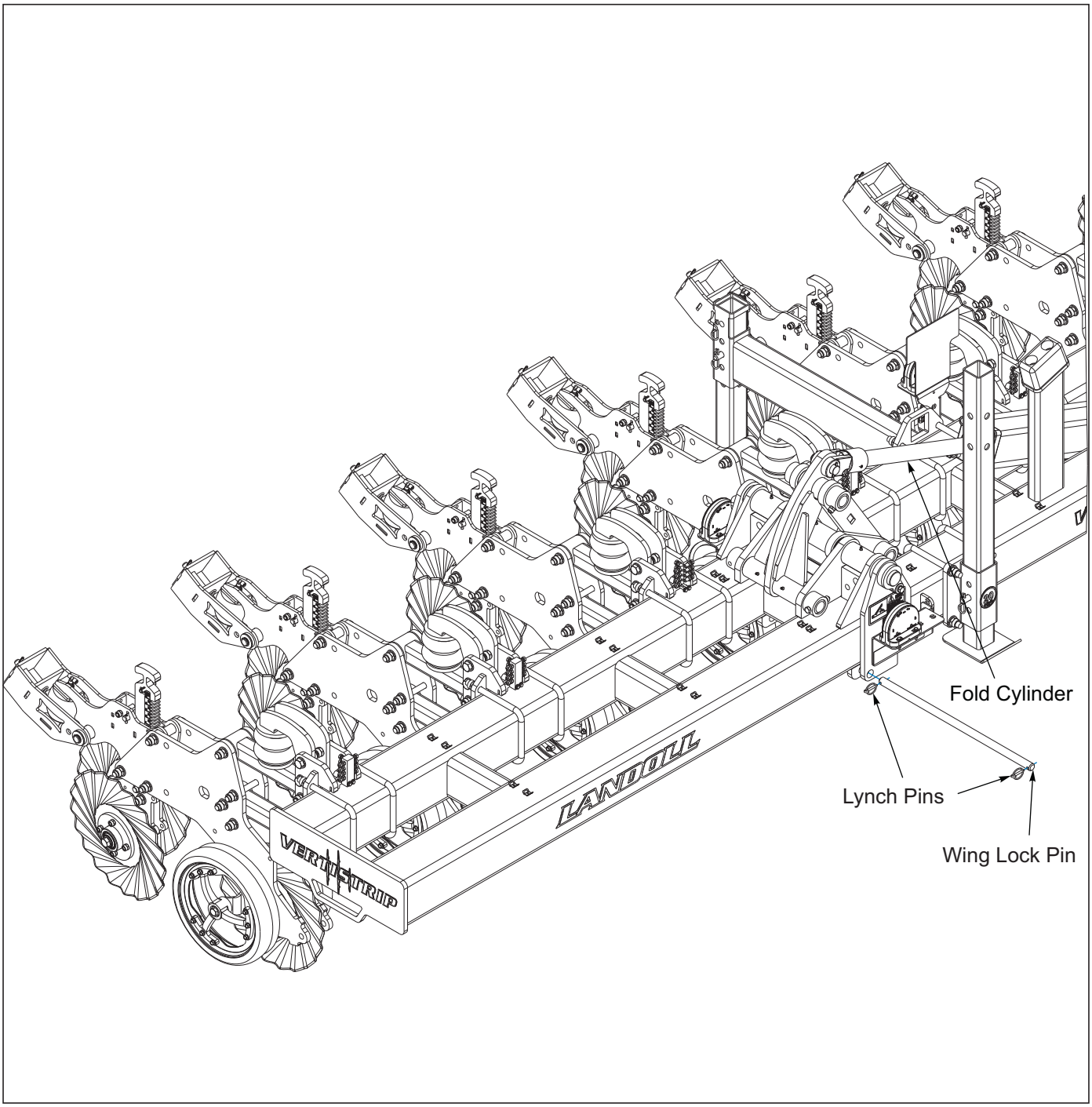

Figure 4-6: Wing Field Position

Leveling Side To Side

1. When the Vertistrip is attached to tractor 3-point, park the tractor/ implement on level ground and check the level on top of toolbar ***See Figure 4-7***. If the implement is not level side to side adjust the tractor 2-point arms to level.
2. The wing fold stops and wing stop shims will be installed at factory to set the level of wings when unfolded.
3. Carefully un-fold the wings ***See Figure 4-5***. When wings are un-folded check the side to side level of the wings.
4. If the wings are not level side to side, fold the wings and and remove the 1/2 x 2 SHCS bolts and remove or add shims until level.

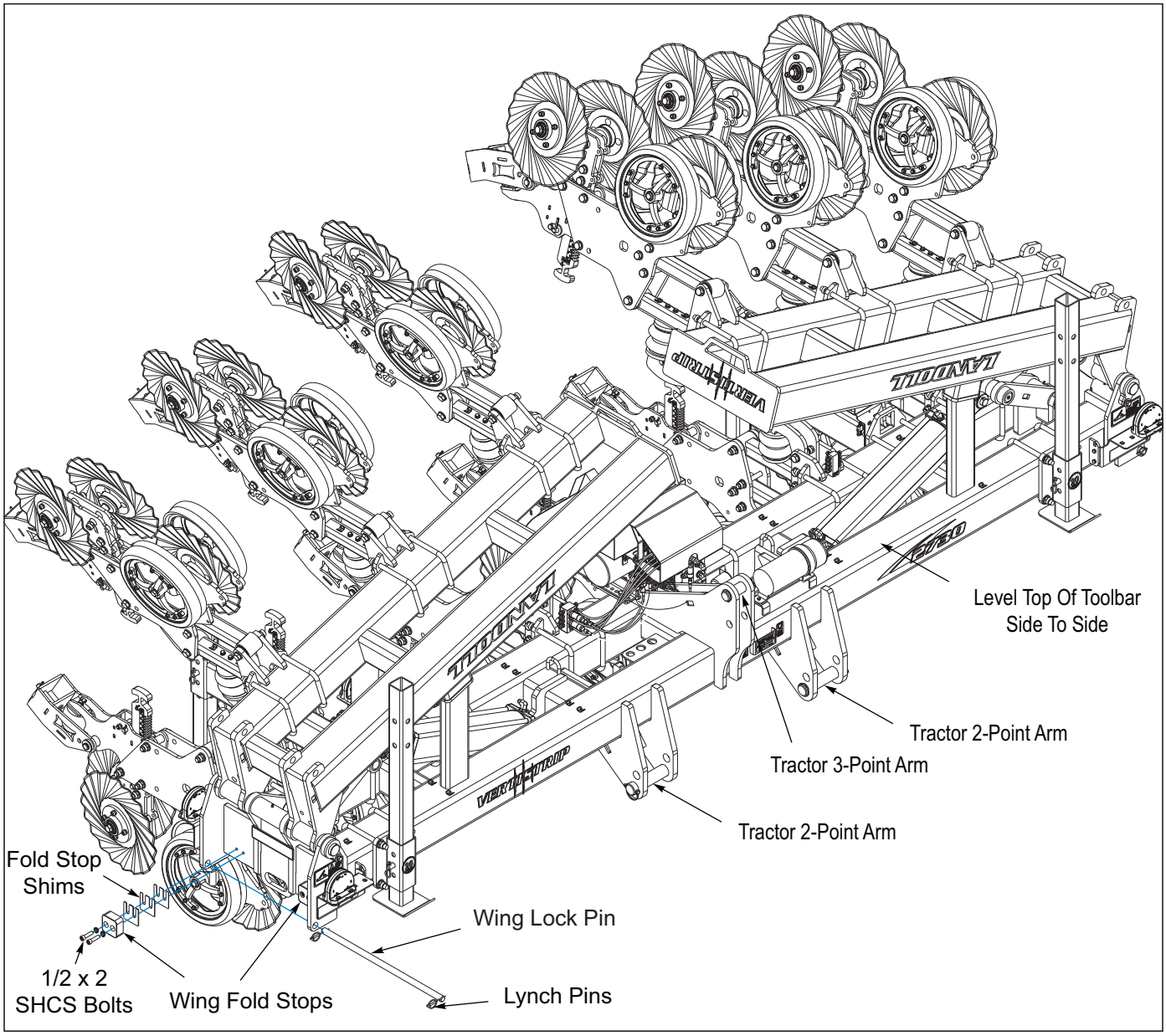

Figure 4-7: Leveling Side to Side

Leveling Front To Rear

1. To set front to rear level of machine, pull into field and unfold wings ***See Figure 4-6***.
2. Lower implement to ground, go a short distance while leaving machine in the ground ***See Figure 4-8***. Stop and put tractor into park.
3. Adjust toolbar height so that bottom of the toolbar measures between 24”-25” to the ground. Raise or lower 3-point of tractor to get this measurement.
4. Adjust tractor 3-point arm until toolbar is level front to back.

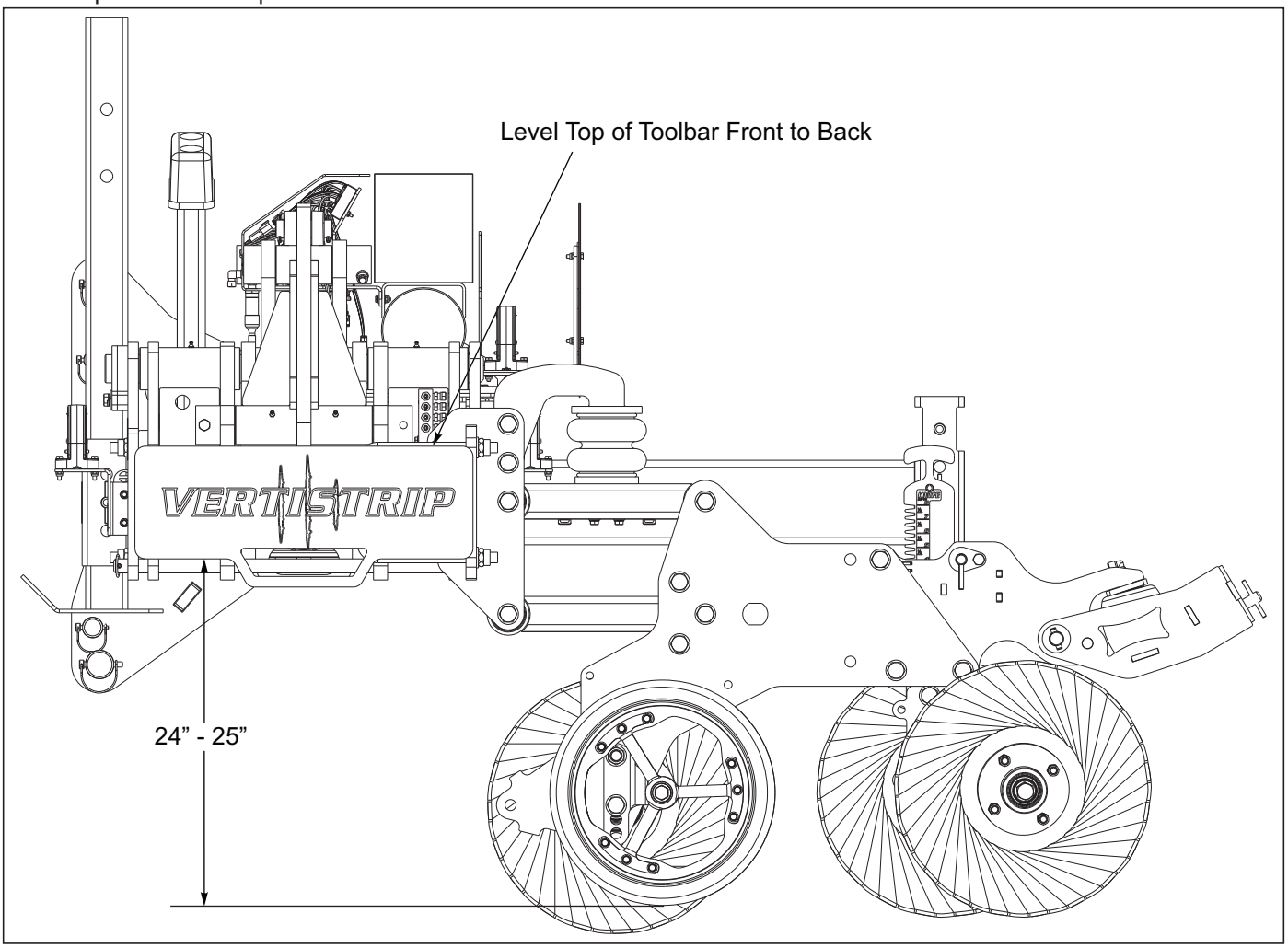

Figure 4-8: Leveling Front to Rear

Compressor Operation

1. The 2730 Vertistrip is equipped with a heavy-duty electric air compressor ***See Figure 4-9*** to charge and adjust the pressure of row unit options.
2. Power is supplied to the air compressor through power cable with a convenience plug to the tractor. The positive and negative wires need connected directly to the battery. The convience plug will be connected in the cab. The compressor will only run when the key is turned on. It is recommended that the tractor be running while operating the compressor to insure full system voltage to the compressor.

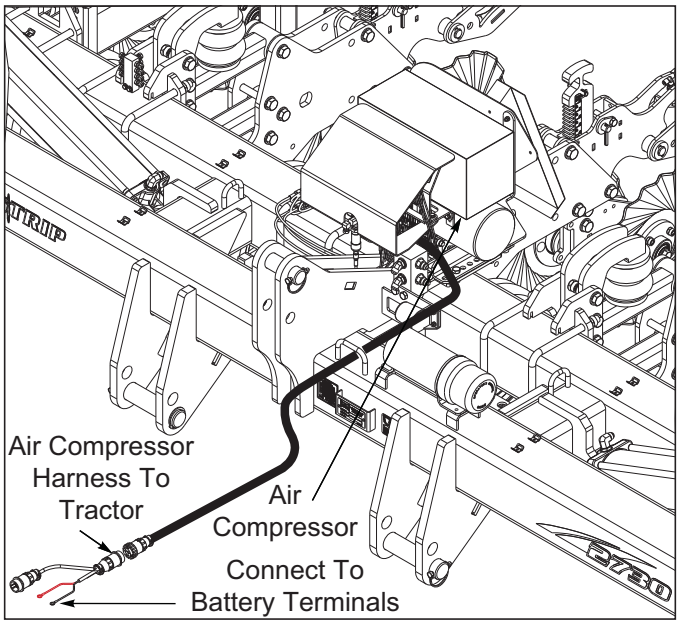

Figure 4-9: Air Compressor Connection

3. The compressor will operate much like a regular air compressor. The compressor will charge the entire system and fill the main air tank in the center. A pressure switch will automatically turn the compressor off when the system has reached full pressure at approximately 150psi. Leave the compressor on while operating. This will ensure the air system is fully charged.
4. The air compressor is designed for oiless operation. There are no fluid levels to check or maintain. The compressor is equipped with a replaceable air filter. Service the filter regularly and replace each season with a new filter.

Front Coulter Depth Adjustment

1. The depth of the front coulter can be adjusted by changing the hole position in the row unit ***See Figure 4-10***. The factory setting is in the bottom hole. This applies to knife machines as well.
2. To adjust depth, remove the 3/4 x 6-1/2 bolt holding the coulter on using 1-1/8” wrench and socket with impact.
3. Bolt can be reached without removing gauge wheel.

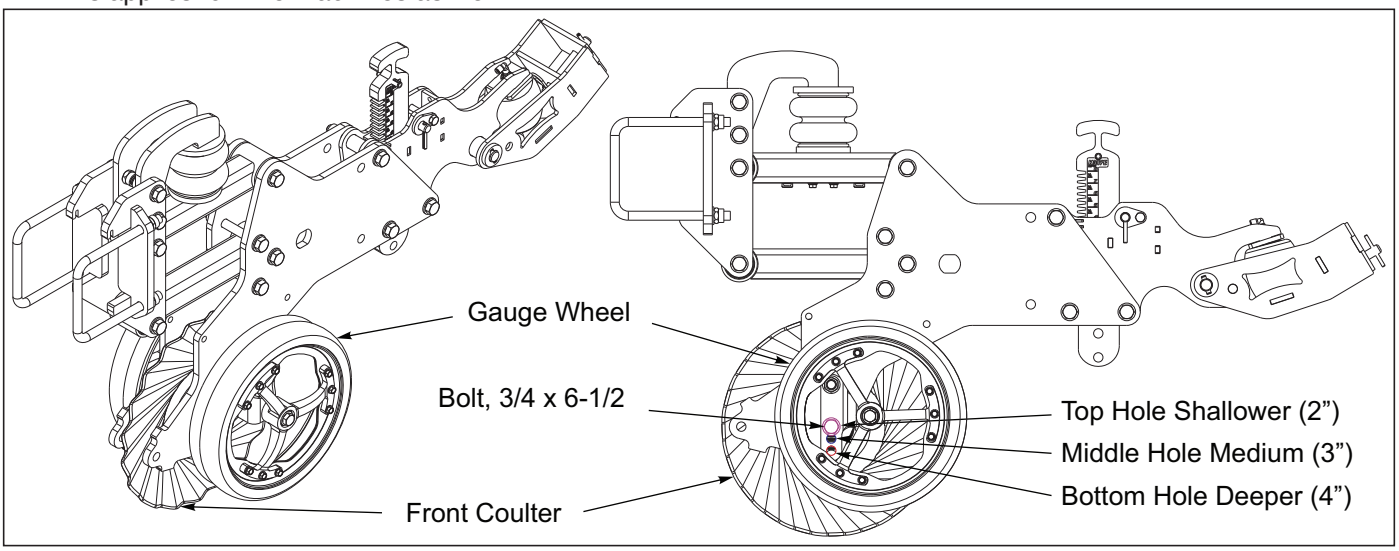

Figure 4-10: Front Coulter Depth Adjustment

Row Cleaner Blade Positioning

1. The factory setting will be set to the **Offset Option** ***See Figure 4-10***. The finger blade assy, RH will be in the front hole setting position and the finger blade assy, LH will be in the rear hole setting position. The **Offset Option** allows the residue to not plug the row cleaners. It is recommended to alternate every other row unit to be set the opposite way with the finger blade assy, LH will be in the front hole setting position and the finger blade assy RH will be in the rear hole setting position.
2. The finger blade assemblies may also be changed to the **Meshed Option** for a more aggressive setting. To change to the **Meshed Option** remove both bolts on the rear hole setting position and move the finger blade assy and scraper blade to the front hole setting and re-install bolts. The **Meshed Option** is more likely to plug the row cleaners.

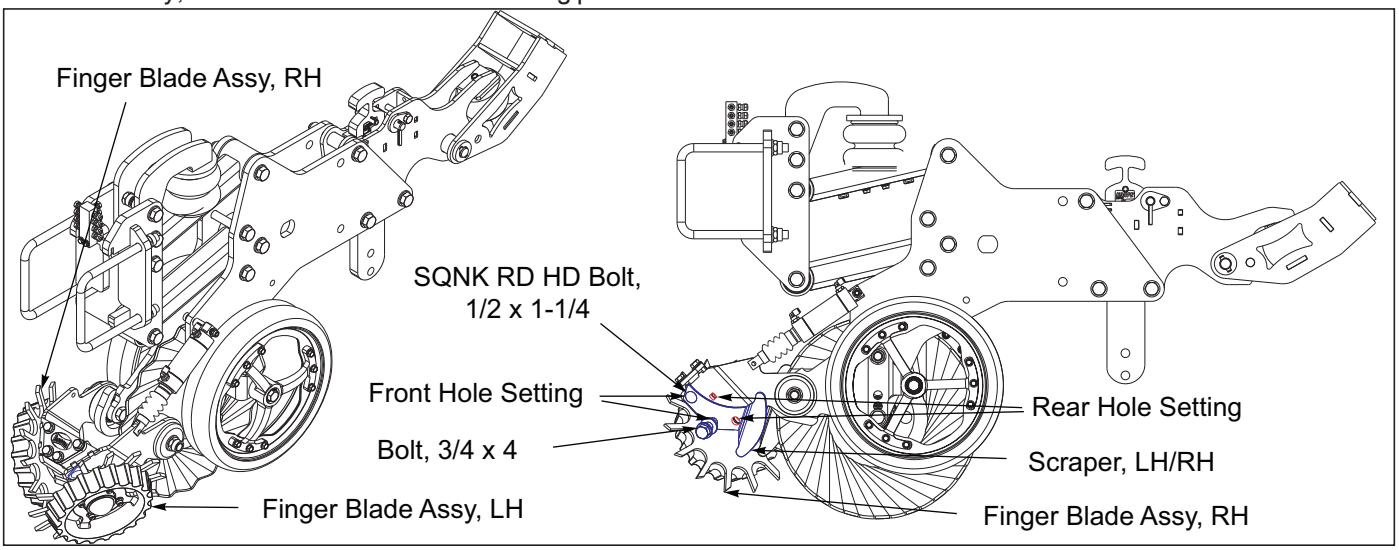

Figure 4-11: Row Cleaner Blade Positioning

Dual Coulter Depth Adjustment

1. The depth of the dual coulter can be adjusted ***See Figure 4-12***. To adjust depth, rotate shank stop pins until roll pins are pointing upward. Slide pin out until shank can be pulled back to release from notches. Adjust shank to desired depth and move forward to engage notches. Slide shank stop pin back through behind shank and rotate until the roll pins are pointing downward.

WARNING

Shanks and coulters are heavy. Keep your feet back away from them.

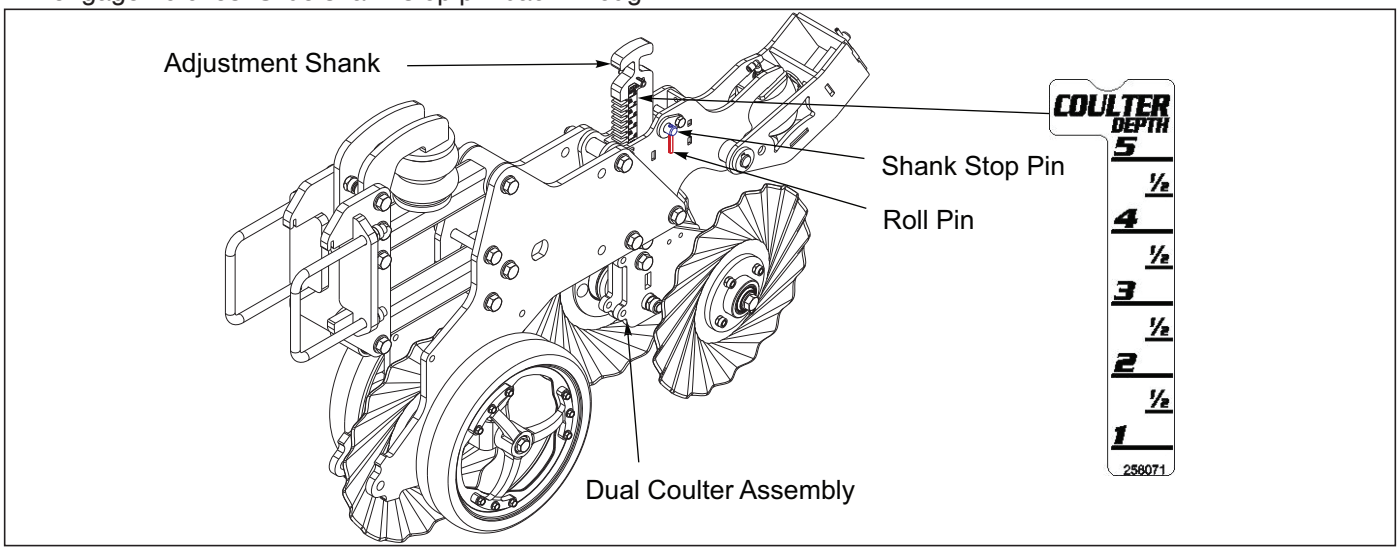

Figure 4-12: Dual Coulter Depth Adjustment

Bermer Coulter Adjustment

The bermer coulter is designed to create a berm around the area with the knife option. There are three main adjustments to achieve the desired results: blade depth, blade angle and blade width.

1. Adjust coulter depth by rotating the 3 notch plates ***See Figure 4-13***.
2. Adjust blade angle by pulling berm adjustment handle forward and rotate to position 1, 2 or 3. Release handle to lock in position from least to most aggresive.
3. To adjust the blade width, remove the snap ring, slide the bermer pivot arm off and reposition 1-1/4 flat washers, then slide the bermer pivot arm back on and re-install snap rings.

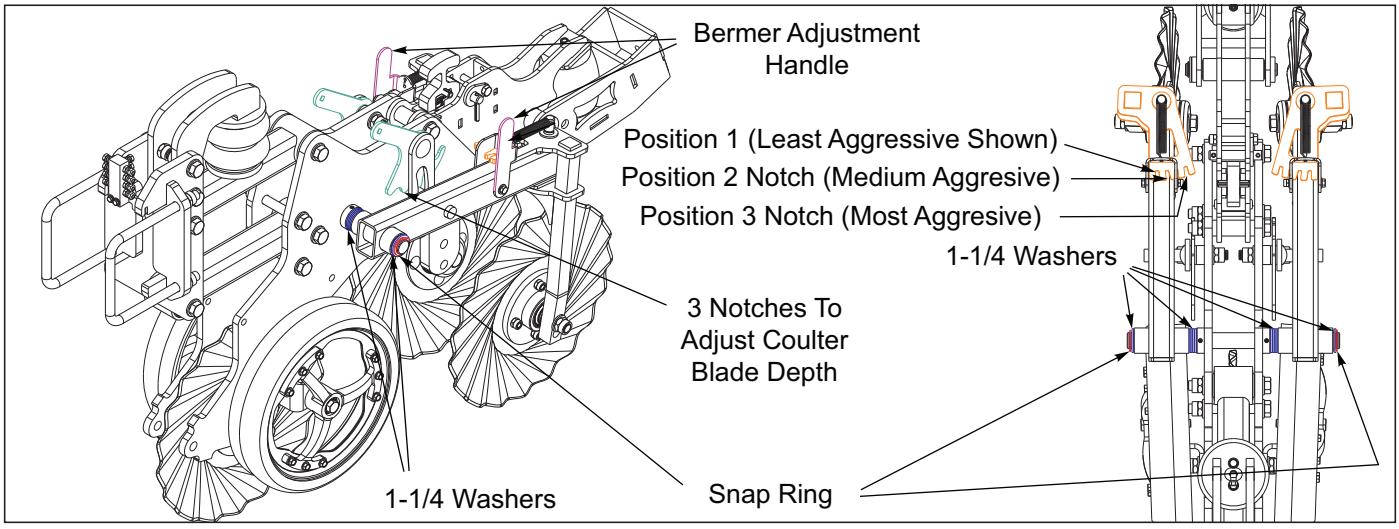

Figure 4-13: Bermer Coulter Adjustment

Knife Depth Adjustment

1. The depth of the knife assembly can be adjusted ***See Figure 4-14***. To adjust depth, rotate shank stop pins until roll pins are pointing upward. Slide pin out until shank can be pulled back to release from notches. Adjust shank to desired depth and move forward to engage notches. Slide shank stop pin back through behind shank and rotate until the roll pins are pointing downward.

WARNING

Shanks and coulters are are heavy. Keep your feet back away from them.

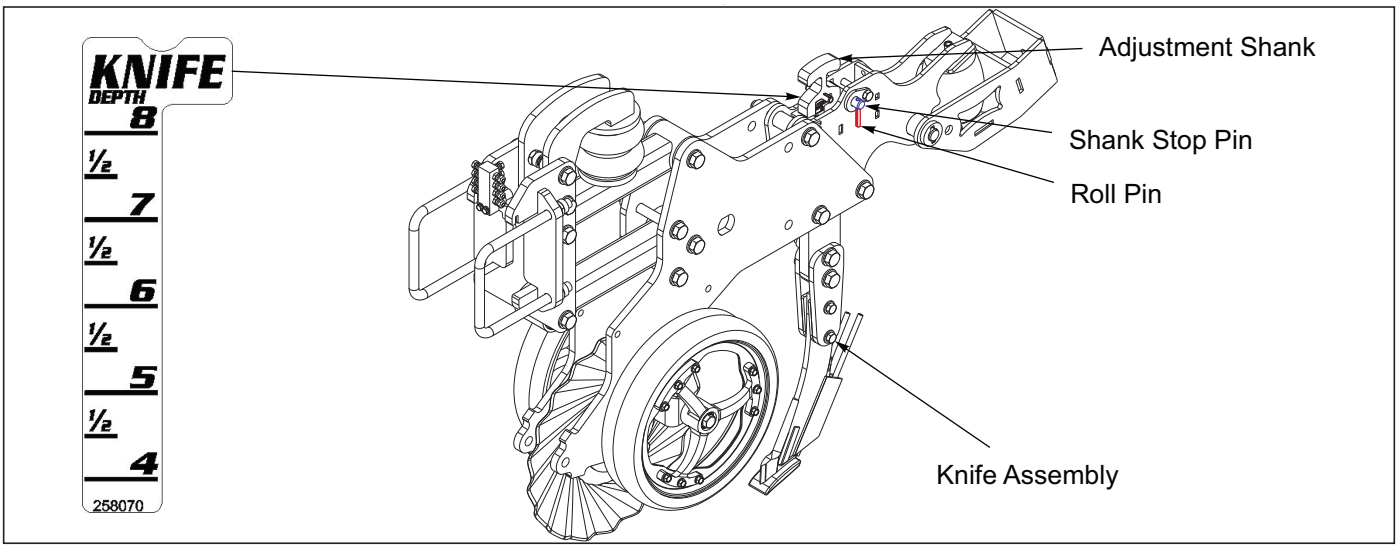

Figure 4-14: Knife Depth Adjustment

Flat Finishing Reel Adjustment

1. There are 2 holes provided for the flat reel assembly depth ***See Figure 4-15***.
2. To adjust raise the machine off the ground, remove the hair pin and pin. Slide the flat reel assembly up or down and re-install the pin and hairpin in the other hole.
3. The down pressure can be adjusted with the air bag with the Loup monitor that is mounted in tractor.

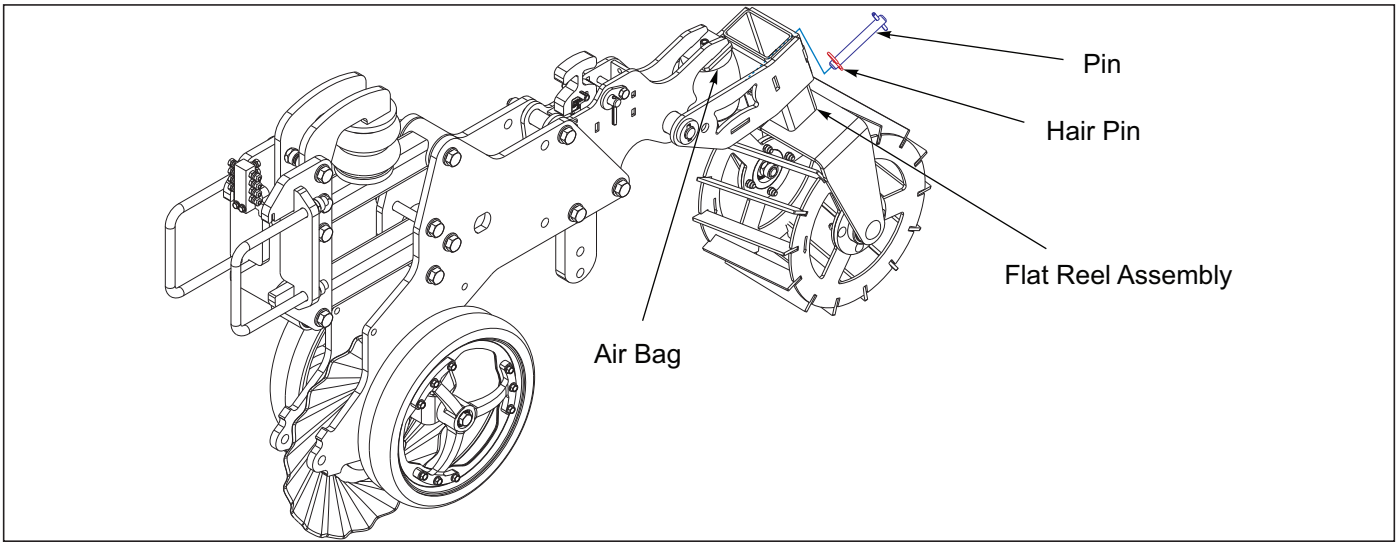

Figure 4-15: Flat Finishing Reel Adjustment

Loup Monitor

1. The 2730 Vertistrip is equipped with a Loup Elite Mini monitor. The monitor is mounted inside of tractor to adjust the row unit options ***See Figure 4-16***.

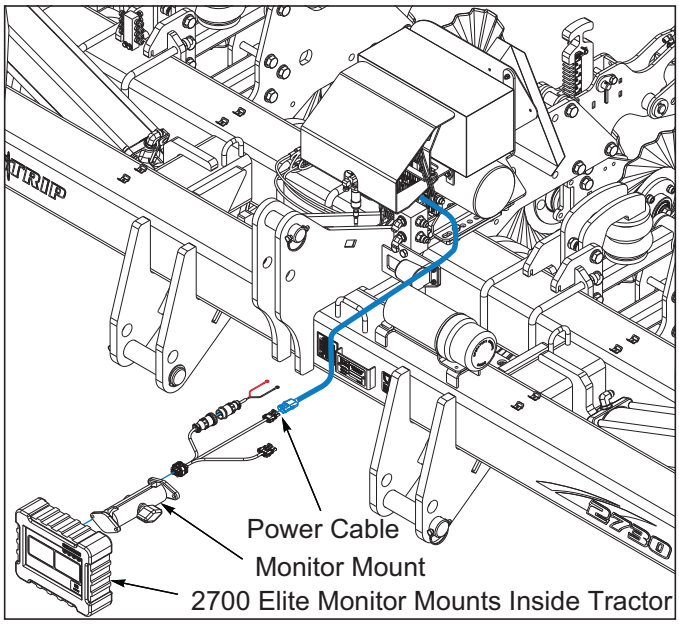

Figure 4-16: Loup II Elite Mini Monitor

2.

For service or setup questions, contact Loup Electronics:

Loup Electronics Inc.
3030 N. 40th Street
Lincoln, NE 68504
Phone: 877-489-LOUP(5687)

402-464-7131

After Hours/Weekend Support:

402-318-6415 or 402-853-6249

Fax: 402-464-7104
info@loupelectronics.com

Loup Monitor Operation

1. The monitor can be powered either by a convience plug in the cab, or hooking directly to tractor battery. Connect the 3 prong plug to the harness near air compressor that says “Hitch” on it.
2. Turn monitor on from a switch on the back side. Once the display is up, place the system button in lower left hand corner to “ON”.



Figure 4-17: Row Unit Adjustments

3. The tank pressure is just reading what compressor tank has, it will flucuate quite a bit, but will have a maximum of approximately 150psi.
4. The row unit button controls the air pressure in the large air bag applying down pressure to the row unit. It will increase in pressure up to 100psi or decrease to 20psi. To activate, touch the screen and use the +/- buttons at the bottom, then touch screen to return to normal and it will change the pressure.
5. The finishing reel button controls the air pressure in the small air bag applying down pressure to the reel. It will increase to 100psi, or decrease to 20psi. To activate, touch the screen and use the +/- buttons at the bottom. Then touch screen to normal and it will change pressure.
6. The row cleaner can either apply down pressure or be fully raised, controlled by an air cylinder. By touching the screen it will show raise or lower. Raise will just fully raise the row cleaners. Lower will allow you to adjust the desired down pressure. After either if these steps touch the “BACK” button in the upper right corner to allow the change to occur.

Table provided for general use.

NOTES:

Chapter 5

Maintenance and Lubrication

Hydraulic Maintenance

1. Check the tractor hydraulic fluid level per tractor owner's manual and after any leakage. Check fluid level with the cylinders in the retracted position.
2. If a cylinder or valve leaks, repair it immediately. Any time a cylinder is opened up, or whenever any seal replacement is necessary, it is advisable to clean all parts and replace all seals. Seal kits are available from your Landoll dealer.
3. Check all hydraulic hoses regularly. Look for binding or cracking. Replace all worn or defective parts immediately.

IMPORTANT

Lower the unit to the ground, and relieve hydraulic pressure before attempting to service any hydraulic component.

Parking

1. When unhitching the Vertistrip from the tractor, it is best to park in the folded position whenever possible. This gives the Vertistrip the smallest storage footprint, and keeps the openers off the ground. Park the Vertistrip on a level area to prevent rolling and shifting.
2. .Lower both front and rear jackstands.
3. Lower tractor 3-point until stands are down on ground.
4. Unpug wing fold hydraulic hoses.
5. Unhook air system and loup monitor.
6. Release 3-point arms and lower until tractor can drive forward.

Lubrication Maintenance

1. ***Table 5-1*** specifies the lubrication points and intervals on the Vertistrip. Proper maintenance of your machine will, under normal operating conditions, help to keep it operating at or near its peak performance for an extended period of time. Proper maintenance is also a condition of keeping your warranty in good status ***See Figure 5-1*****.**
2. The Vertistrip should be lubricated after initial setup and prior to field operations. When lubricating the Vertistrip. SAE multi-purpose EP grease, or EP grease with 3-5% molybdenum sulfide is recommended. Wipe soil from fittings before greasing. Replace any lost or broken fittings immediately.

LUBRICATION TABLE			
ITEM	**DESCRIPTION**	**NO. OF LUBE POINTS**	**INTERVAL (Hours Unless Stated)**
1	Center Frame Pivot	2	50
2	Wing Frame Pivot	4	50
3	Wing Fold Linkage	4	50
4	Center Fold Linkage	2	50
5	Hinge Pin	2	50

Table 5-1: Lubrication Table

3. The air compressor is oil less and maintence free.
4. During use and before storage drain the tank daily at the bottom to remove any water.
5. Inside the air compressor box is a water filter, clean and inspect as needed.

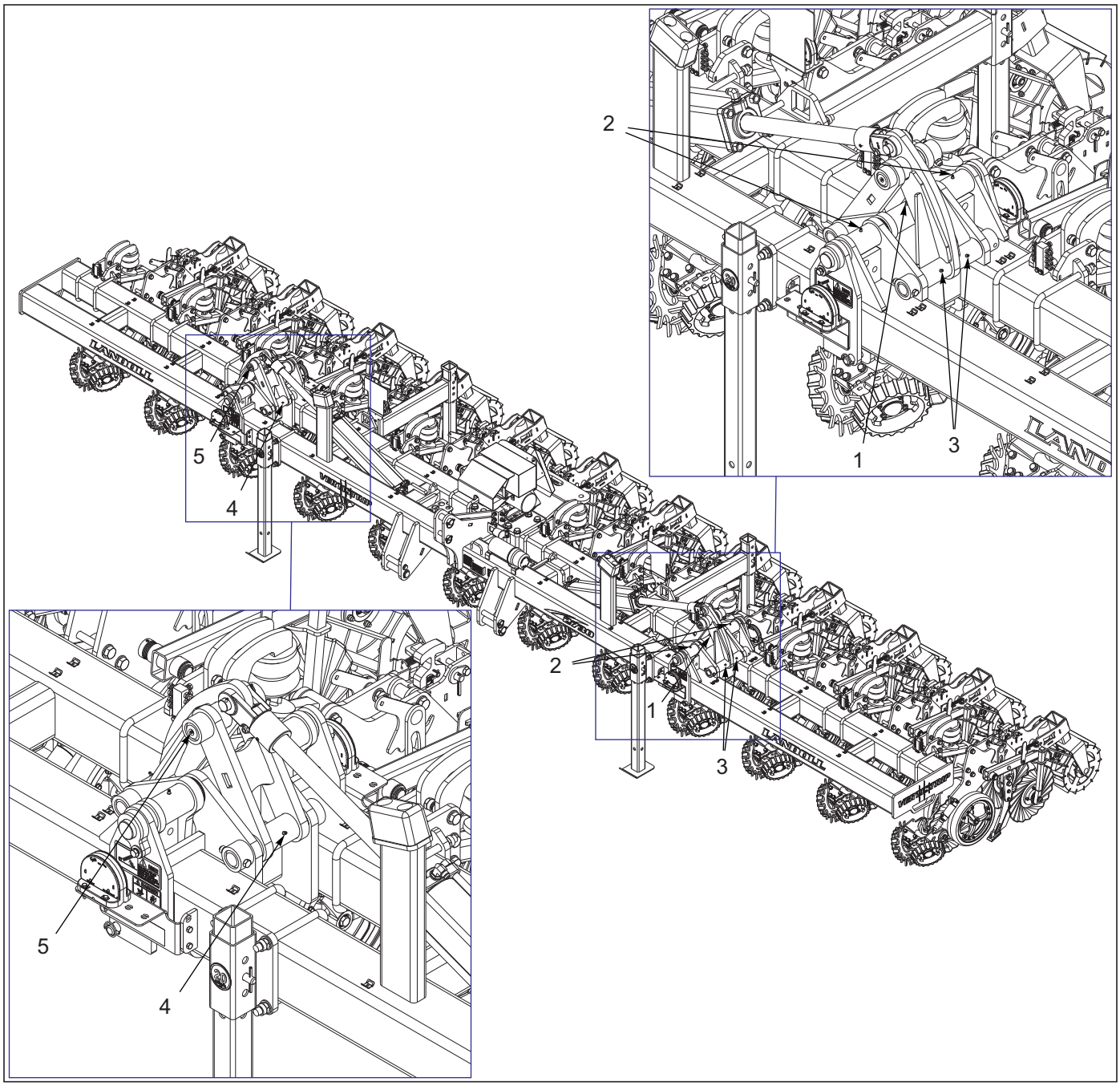

Figure 5-1: Lubrication Points

Storage

Preparing the Vertistrip for storage during extended periods of time will not only help protect the Vertistrip, but insure that it will be maintained, serviced, and ready for the next planting season.

1. Clean any remaining fertilizer from the row units. Thoroughly remove and wash off any dry or liquid fertilizer.
2. Wash or blow off any remaining dirt, mud or residue from the Vertistrip.
3. Inspect the Vertistrip for worn or broken parts. Make repairs and service during the off season to prevent delays.
4. Lubricate the Vertistrip at all points ***See "Lubrication Maintenance" on page 5-2.***
5. Inspect all nuts and bolts for tightness.
6. Touch up any scratches or chips with spray paint to protect the metal.
7. Maintain air system operating pressure on the openers.
8. Store the Vertistrip.inside if possible. If stored outside, cover with a tarp.

Chapter 6

Troubleshooting Guide

The Troubleshooting Guide, shown below, is included to help you quickly locate problems that can happen using your Vertistrip. Follow all safety precautions stated in the previous sections when making any adjustments to your machine.

PROBLEM	PROBABLE CAUSE	SOLUTION
TOOLING NOT ENGAGING WITH THE SOIL AS DESIRED	Toolbar not running low enough	Adjust hitch setting in tractor to allow 3-point hitch to run lower
	Toolbar not level	Adjust top link and/or hitch arm heights***See "Leveling Front To Rear" on page 4-8.***
	Down pressure springs set too light	Adjust air pressure to increase down force
ROW UNITS PLUG WITH RESIDUE BETWEEN FRONT COULTER AND DOUBLE COULTER/ROW COULTER	Toolbar height/levelness	Adjust toolbar height/level.
	Wet/damp conditions preventing good residue flow	Wait for ground to dry.
		Adjust ground speed to improve residue flow.
BLADE IS NOT TURNING	Bearing going out	Check/replace bearing.
	Obstruction holding disc in place	Remove obstructions and check row unit set up.
	Blade not making contact with the ground	Adjust blade depth to hold blades in ground
	Residue build-up is preventing the blade from turning	Remove build-up from flexberm.
	Bearing hub bolt is bent or wraped	Replace bearing hub bolt.
BERMER ARMS ARE NOT FLOATING UP AND DOWN PROPERLY	Bermer adjustment handle may not be in line	Refer to ***See "Bermer Coulter Adjustment" on page 4-11.*** and make sure handle is set correctly according to desired depth.
BLADE ASSEMBLY ROTATES FREELY	Spring is broken	Contact Landoll for replacement spring.
	Handle may not be engaged	Refer to ***See "Tractor Preparation" on page 4-2.*** to make sure handle is fully engaged.
LITTLE TO NO BERM SHOWING IN FIELD	Blade angle may not be aggressive enough	Refer to ***See "Bermer Coulter Adjustment" on page 4-11.*** and set the blade at a more aggressive angle.
TOO MUCH BERM SHOWING IN THE FIELD	Blade angle may be set too aggressively	Refer to ***See "Bermer Coulter Adjustment" on page 4-11.*** and set the blade at a less aggressive angle.
ROW UNITS PLUG WITH RESIDUE BETWEEN FRONT COULTER AND KNIFE	Wet/damp conditions preventing good residue flow	Decrease ground speed to improve residue flow.
		Adjust row cleaners up slightly to decrease residue load.
ROW UNITS PLUG WITH RESIDUE BETWEEN ROW CLEANER AND KNIFE	Toolbar height/levelness	Adjust toolbar height/level.
	Too much residue at knife	Refer to ***See "Loup Monitor" on page 4-13.*** to increase row cleaner pressure to move residue away from the knife.
		Adjust ground speed to improve reisdue flow..
	Wet/damp conditions preventing good residue flow	Adjust ground speed to improve residue flow..

PROBLEM	PROBABLE CAUSE	SOLUTION
ROW UNITS PLUG WITH RESIDUE BETWEEN KNIFE AND BERM BUILDING COULTERS	Not enough space for residue between knife and discs. Straighten coulters to allow more residue flow.	Refer to ***See "Dual Coulter Depth Adjustment" on page 4-11.*** to increase width between discs and knife.
	Heavy residue conditions	Adjust ground speed to improve residue flow.
	Wet/damp conditions preventing good residue flow	Adjust ground speed to improve residue flow.
BERM ISN'T SIZED/SHAPED AS DESIRED	Beam building discs not optimized	Adjust beam building discs as described on ***See "Bermer Coulter Adjustment" on page 4-11.*** to increase pressure.
	Rear finishing tool not optimized	Adjust rear finishing tool.
ROW UNITS PLUG WITH RESIDUE BETWEEN FRONT COULTER AND DOUBLE COULTER	Wet/damp conditions preventing good residue flow	Refer to ***See "Loup Monitor" on page 4-13.*** to increase row cleaner down pressure.
RESIDUE PLUGS BETWEEN ROW UNITS	Rows are not configured correctly	Make sure row units are configured as shown ***See "Bermer Coulter Adjustment" on page 4-11.***
	Heavy residue	Adjust air pressure on row cleaners for more cleaning. Adjust ground speed to improve residue flow.
	Wet/damp conditions preventing good residue flow	Wait for conditions to improve.
BERM ISN'T SIZED/SHAPED AS DESIRED	Rear coulters not optimized	Adjust depth of coulters to improve shape.
	Rear finishing tool not optimized	Refer to chart ***See "Bermer Coulter Adjustment" on page 4-11.*** to adjust rear finishing tool.

Table provided for general use.

NOTES:

Instructions for Ordering Parts

**** Repair parts must be ordered through an Authorized Dealer ****

DEALER INSTRUCTIONS FOR ORDERING PARTS FROM LANDOLL PARTS DISTRIBUTION CENTER

Phone #: 800-423-4320 or 785-562-5381 **Fax #: 888-527-3909**
Order online: dealer.landoll.com

SERIAL NUMBER PLATE

The Serial Number Plate, which lists the model number and serial number, is located on the front of the hitch *See Figure 7-1*

SERIAL NUMBER NOMENCLATURE

The following information will help decode the 2700 Vertistrip serial number

27H2600100 = xxmyyssssss

The 2700 Vertistrip series QR code decal, may be scanned to link to the most current manuals, located on the front of the frame *See Figure 7-1*.

xx	= model series (i.e. 27 for Vertistrip
m	= month of manufacture (ex. “H” means October. The letter I is not used.)
yy	= year manufactured (ex. “26” means 2026)
sssss	= Sequential number used to track warranty and service information.

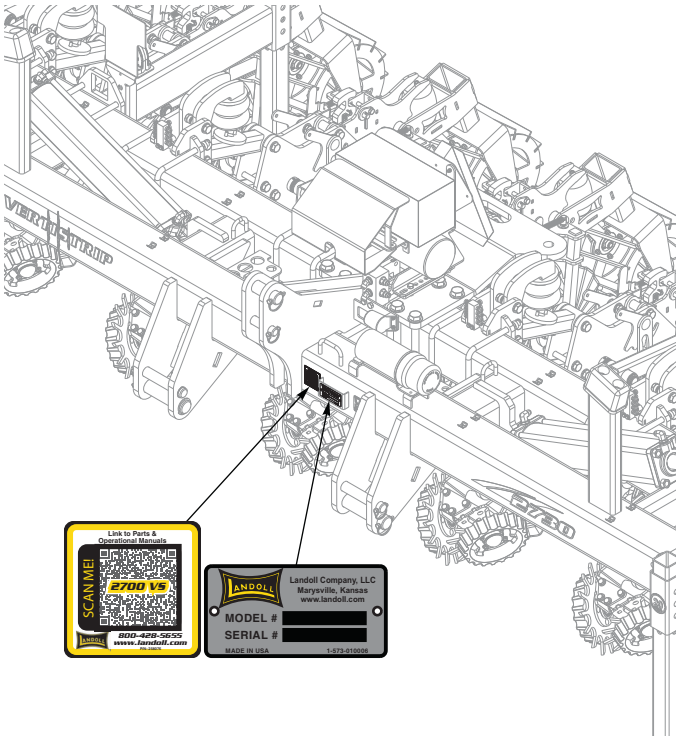

Figure 7-1: Data Plate and QR Code Decal Location

Manuals for 2700 Vertistrip

Manual Number	Manual Type
F-1201	Operator’s Manual
F-1202	Parts Manual

Document Control Revision Log:

Date	Form #	Improvement(s): Description and Comments
05/02/2026	F-1201	New Manual
10/30/2026	F-1201-2610	Initial Release

Equipment from Landoll Company, LLC is built to exacting standards ensured by ISO 9001:2015 registration at all Landoll manufacturing facilities.

Model 2700

Vertistrip

Operator's Manual

Re-order Part Number F-1201

LANDOLL COMPANY, LLC
1900 North Street
Marysville, Kansas 66508
(785) 562-5381
800-428-5655 ~ WWW.LANDOLL.COM

Copyright 2026. Landoll Company, LLC
"All rights reserved, including the right to reproduce this material or portions thereof in any form."