Model 2700
Vertistrip
Parts Manual

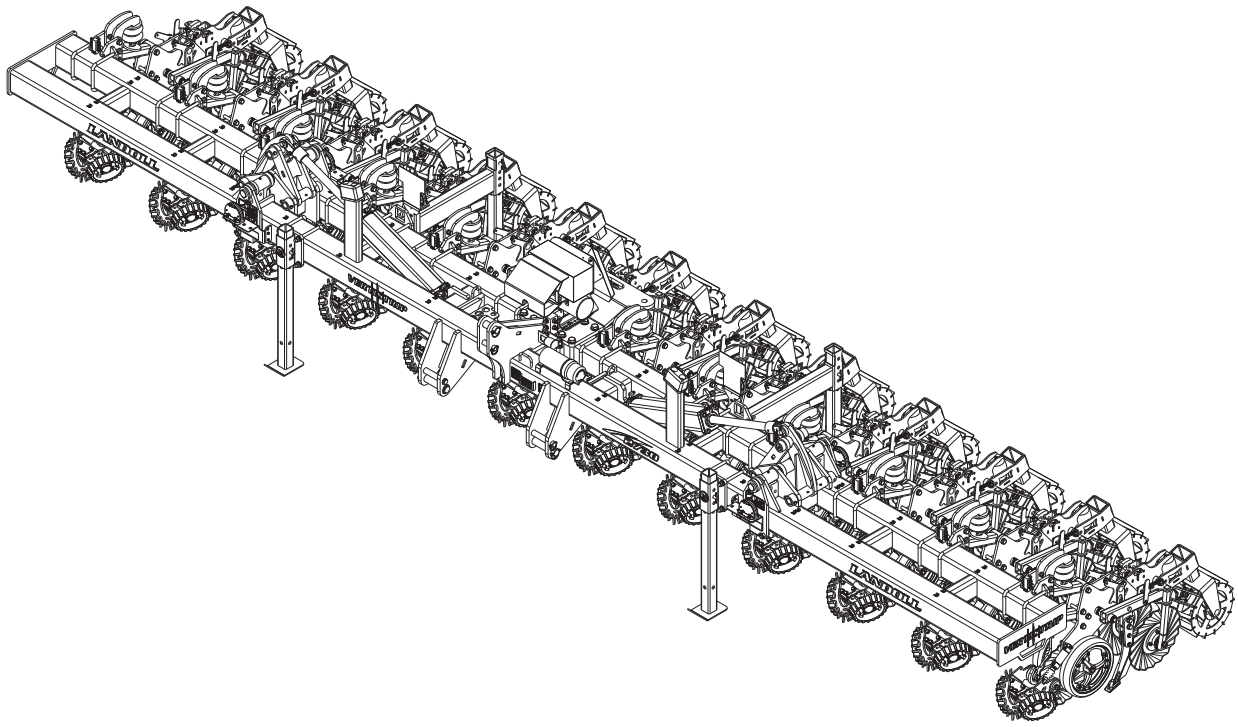

LANDOLL COMPANY, LLC
1900 North Street
Marysville, Kansas 66508
(785) 562-5381
800-428-5655 ~ WWW.LANDOLL.COM

Instructions for Ordering Parts

**** Repair parts must be ordered through an Authorized Dealer ****

DEALER INSTRUCTIONS FOR ORDERING PARTS FROM LANDOLL PARTS DISTRIBUTION CENTER

Phone #: 800-423-4320 or 785-562-5381 **Fax #: 888-527-3909**
Order online: dealer.landoll.com

SERIAL NUMBER PLATE

The Serial Number Plate, which lists the model number and serial number, is located on the front of the hitch *See Figure 1-1*.

SERIAL NUMBER NOMENCLATURE

The following information will help decode the 2700 Vertistrip serial number

27H2600100 = xxmyyssssss

The 2700 Vertistrip series QR code decal, may be scanned to link to the most current manuals, located on the front of the frame *See Figure 1-1*.

xx	= model series (i.e. 27 for Vertistrip)
m	= month of manufacture (ex. “H” means October. The letter I is not used.)
yy	= year manufactured (ex. “26” means 2026)
sssss	= Sequential number used to track warranty and service information.

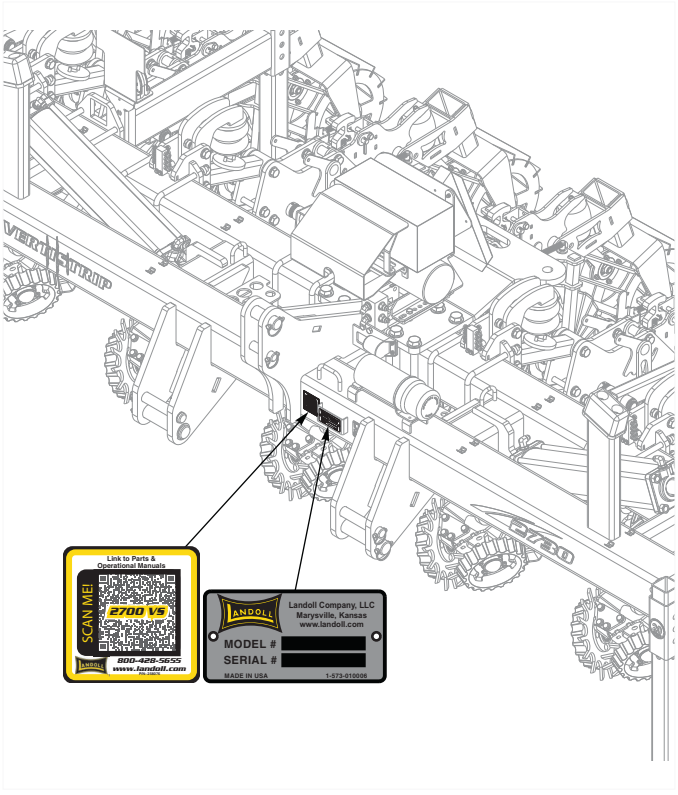

Figure 1-1: Serial Number Plate and QR Code Decal Location

Manuals for 2700 Vertistrip

Manual Number	Manual Type
F-1201	Operator’s Manual
F-1202	Parts Manual

Table of Contents

1 Frame Assemblies

Center Frame Assembly 1-1
Wing Frame Assembly 1-3

2 Row Unit Assemblies

Row Unit Base To Frame Assembly 2-1
Row Unit Base Assembly 2-3
Row Cleaner Assembly 2-7
Dual Coulter Assembly 2-9
Direct Shank Coulter Assembly 2-11
Mole Knife Assembly 2-13
Flat Reel Assembly 2-15

3 Air Assemblies

Row Units/Compressor Air Assembly 3-1
Air Compressor Assembly 3-3

4 Hydraulic Assemblies

Hydraulic Assembly Fold 4-1

5 Cylinders

Cylinder Assembly 5 x 24 5-1

6 Electrical

Electrical Assembly W/LED Lights 6-1

7 Decals

Decals 7-1

8 Attachments

9 Glossary

10 Index

Frame Assemblies

Center Frame Assembly

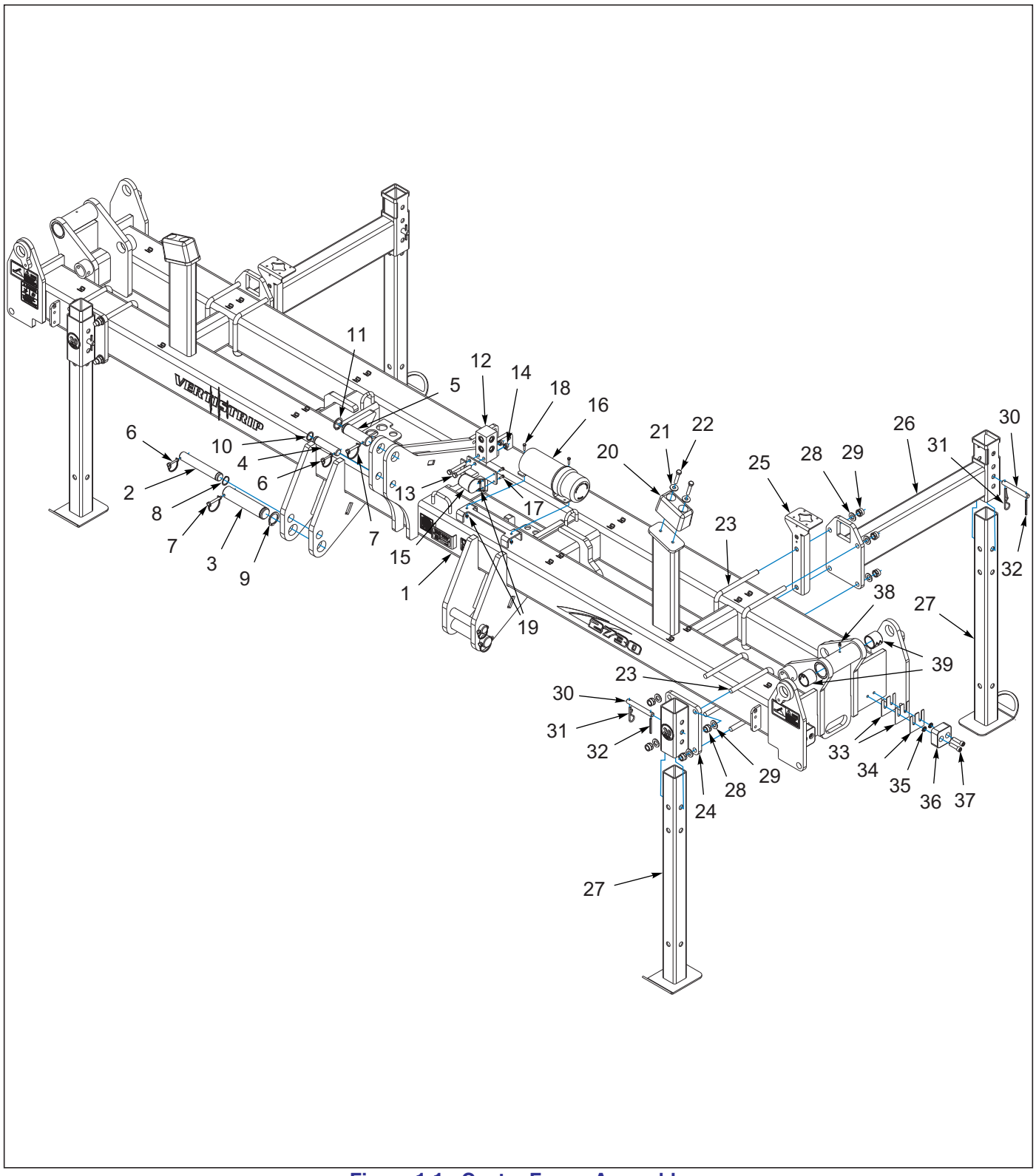

Figure 1-1: Center Frame Assembly

Center Frame Assembly

ITEM	PART NUMBER	DESCRIPTION	QTY.
1	258367	FRAME WLDMT, 4 ROW CENTER	1
1	256760	FRAME WLDMT, 6 ROW CENTER	1
1	258335	FRAME WLDMT, 8 ROW CENTER	1
2	258326	PIN, LOWER HITCH, CAT 3	2
3	258327	PIN, LOWER HITCH, CAT 4N	2
4	258328	PIN, UPPER HITCH, CAT 3	1
5	258329	PIN, UPPER HITCH, CAT 4N	1
6	156614	PIN,1/4X2 ROUND WIRE LOCK	3
7	172905	PIN, 3/8X2 ROUND WIRE LOCK	3
8	3-630-010004	RING, RETAINING EXT 1-7/16	2
9	1-630-010021-02	RING, RETAINING 2 HD	2
10	120454	RING,RETAINING 1.25 HD	1
11	162037	RING, 1.75 RETAINING HD	1
12	2-474-010022	MANIFOLD HYDRAULIC, 8 HOSE	1
13	1-654-010055-11	SCREW,HX CP 1/2-13UNCX3-1/2	2
14	1-512-010005-09	NUT,HEX,SLFLKG, 1/2-13 GRB	2
15	2-368-010287	HARNESS, STOR-A-WAY	1
16	150076	MANUAL TUBE (4-1/4"ID)	1
17	1-654-010047-04	SCREW,HEX CAP,1/4-20X3/4 GR5	2
18	1-654-010047-06	SCREW,HX CP 1/4-20UNCX1 GR5	2
19	1-512-010005-01	NUT,HEX,SLFLKG GRB 1/4-20	4
20	128874	BUMPER RUBBER 6X3X3-1/2	2
21	1-861-010032-15	WASHER, FLAT 1/2 W ZP/CD	4
22	1-654-010055-07	SCREW HX CP 1/2-13UNCX2-1/2	4
23	2-102-010064	U-BOLT, SET BACK	8
24	258465	WELDMENT, FT STAND MT	2
25	258319	MOUNT, LED TAIL LIGHT	2
26	258469	WELDMENT, RR STAND MT	2
27	258472	WELDMENT, STAND LEG	4
28	1-861-010032-20	WASHER, FLAT,3/4 N ZP/CD	16
29	1-512-010005-15	NUT,HEX,SLFLKG GRB 3/4-10	16
30	2-557-010409	PIN, WING LOCK	4
31	1-557-010013	PIN, HAIR 3/16 DIA	4
32	0600-250-03000	1/4X3 ROLL PIN ZP	4
33	258305	1/16" SHIM, WING FOLD STOP	8
34	258306	1/8" SHIM, WING FOLD STOP	4
35	1-861-010034-13	WASHER, LKG HLCL SPR, 1/2	8
36	258304	PLATE, WING FOLD STOP	4
37	218533	SHCS 1/2-13 X 2 ZP	8
38	171024	FITTING, GREASE 5/16-24 STR	2
39	258307	BUSHING SPRING 2.375 X 2.0 X 2	4

Wing Frame Assembly

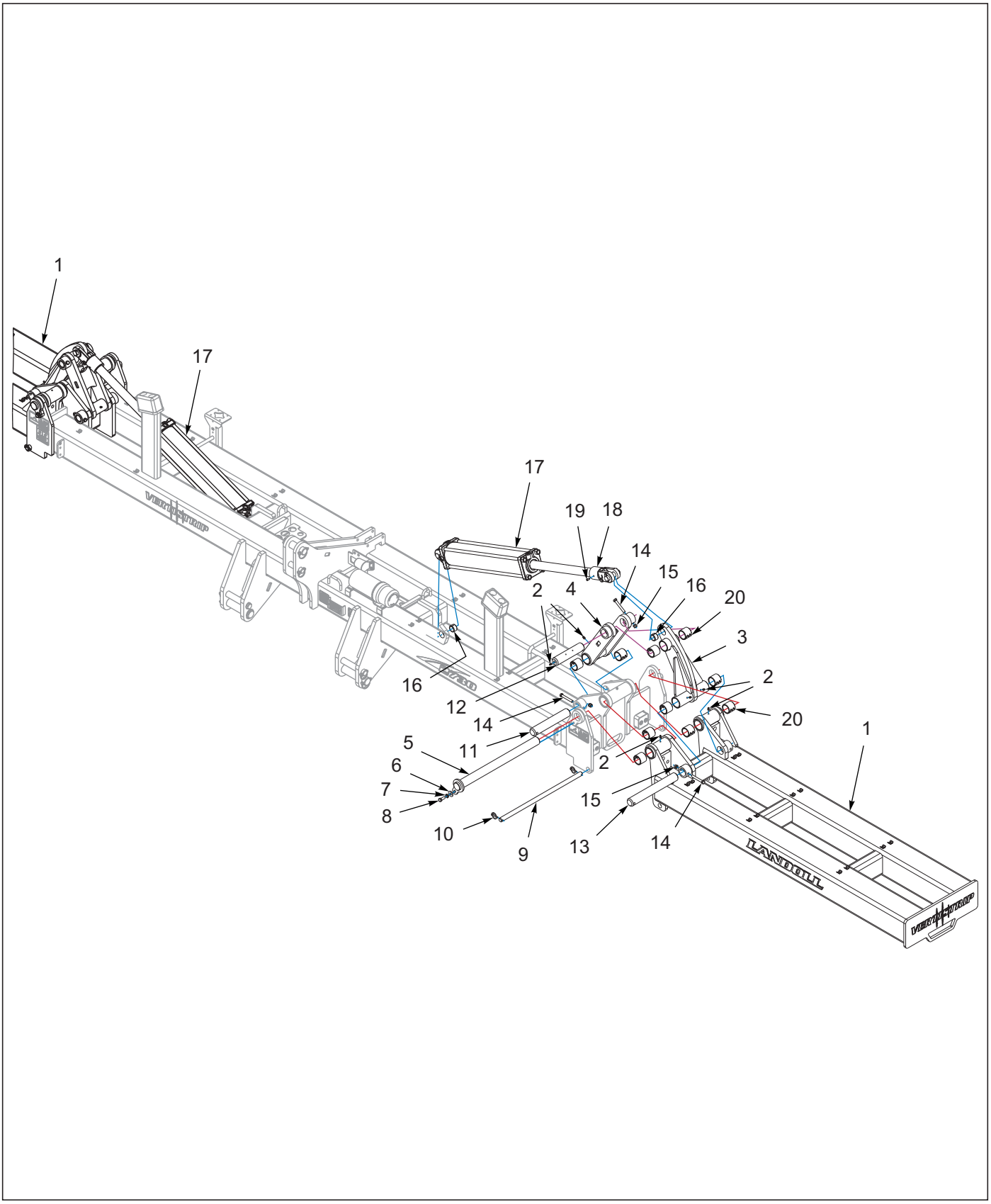

Figure 1-2: Wing Frame Assembly

Wing Frame Assembly

ITEM	PART NUMBER	DESCRIPTION	QTY.
1	258368	FRAME WLDMT, 2 ROW WING	2
1	256761	FRAME WLDMT, 3 ROW WING	2
1	258336	FRAME WLDMT, 4 ROW WING	2
2	171024	FITTING, GREASE 5/16-24 STR	12
3	256767	WLDMT, WING FOLD LINKAGE	2
4	256766	WLDMT, CENTER FOLD LINKAGE	2
5	258310	PIN, HINGE, Ø2" X 26"	2
6	1-861-010032-15	WASHER, FLAT 1/2 W ZP/CD	2
7	1-861-010034-13	WASHER, LKG HLCL SPR, 1/2	2
8	1-654-010055-02	SCREW 1/2-13UNCX1-1/4 CP GR5	2
9	258316	PIN, WING LOCK, Ø1" X 27"	2
10	134912	PIN, LYNCH 1/4 X 1-1/4	2
11	258314	PIN, HINGE, Ø2" X 11-7/8"	2
12	258315	PIN, HINGE, Ø2" X 9-1/8"	2
13	258313	PIN, HINGE, Ø2" X 15-3/8"	2
14	1-654-010055-11	SCREW,HX CP 1/2-13UNCX3-1/2	6
15	1-512-010005-09	NUT,HEX,SLFLKG, 1/2-13 GRB	6
16	2-150-010174	BUSHING,1-5/8X1-1/4X1	4
17	1-242-010172-5	CYL HYD 5X24 3000PSI **(SEE PAGE 5-1)**	2
18	258475	CYLINDER STOP, ø2.031 x 3.063	2
19	1P444	SET SCREW, 3/8-16 X 3/4 NYLON	2
20	258307	BUSHING SPRING 2.375 X 2.0 X 2	20

Row Unit Assemblies

Row Unit Base To Frame Assembly

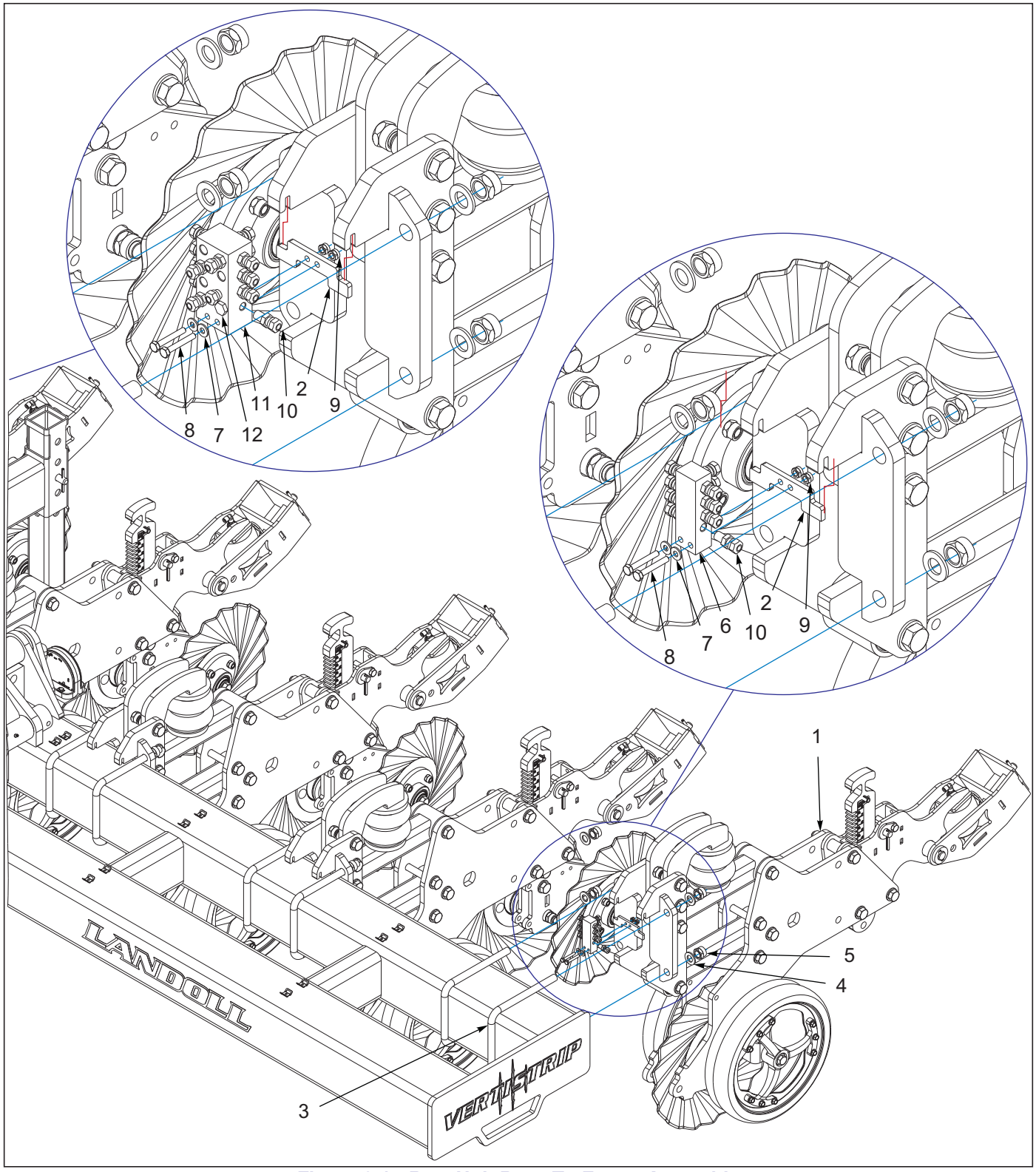

Figure 2-1: Row Unit Base To Frame Assembly

Row Unit To Frame Assembly

ITEM	PART NUMBER	DESCRIPTION	QTY.		
--	-----	2730-8X30 VERTISTRIP	*		
--	-----	2730-12X30 VERTISTRIP		*	
--	-----	2730-16X30 VERTISTRIP			*
1	-----	ROW UNIT BASE ASSEMBLY **(SEE PAGE 2-3)**	8	12	16
2	258033	PLATE, AIR MANIFOLD MOUNT	8	12	16
3	2-102-010064	U-BOLT, SET BACK	16	24	32
4	1-861-010032-20	WASHER, FLAT,3/4 N ZP/CD	32	48	64
5	1-512-010005-15	NUT,HEX,SLFLKG GRB 3/4-10	32	48	64
6	258043	MANIFOLD, AIR CENTER **(SEE PAGE 3-1)**	8	12	16
7	1-861-010032-06	WASHER, FLAT 1/4 N ZP/CD	16	24	32
8	1-654-010047-09	SCREW,HX CP,1/4-20UNCX1-3/4G5	16	24	32
9	1-512-010005-01	NUT,HEX,SLFLKG GRB 1/4-20	16	24	32
10	1-297-010007-04	FITTING, AIR, 1/4TUBEX1/8NPT	96	144	192
11	258595	MANIFOLD, AIR MAIN/SENSOR **(SEE PAGE 3-1)**	1	1	1
12	1-297-010033-02	FTG, BRASS PLUG HEX 1/4NPT	1	1	1

Row Unit Base Assembly

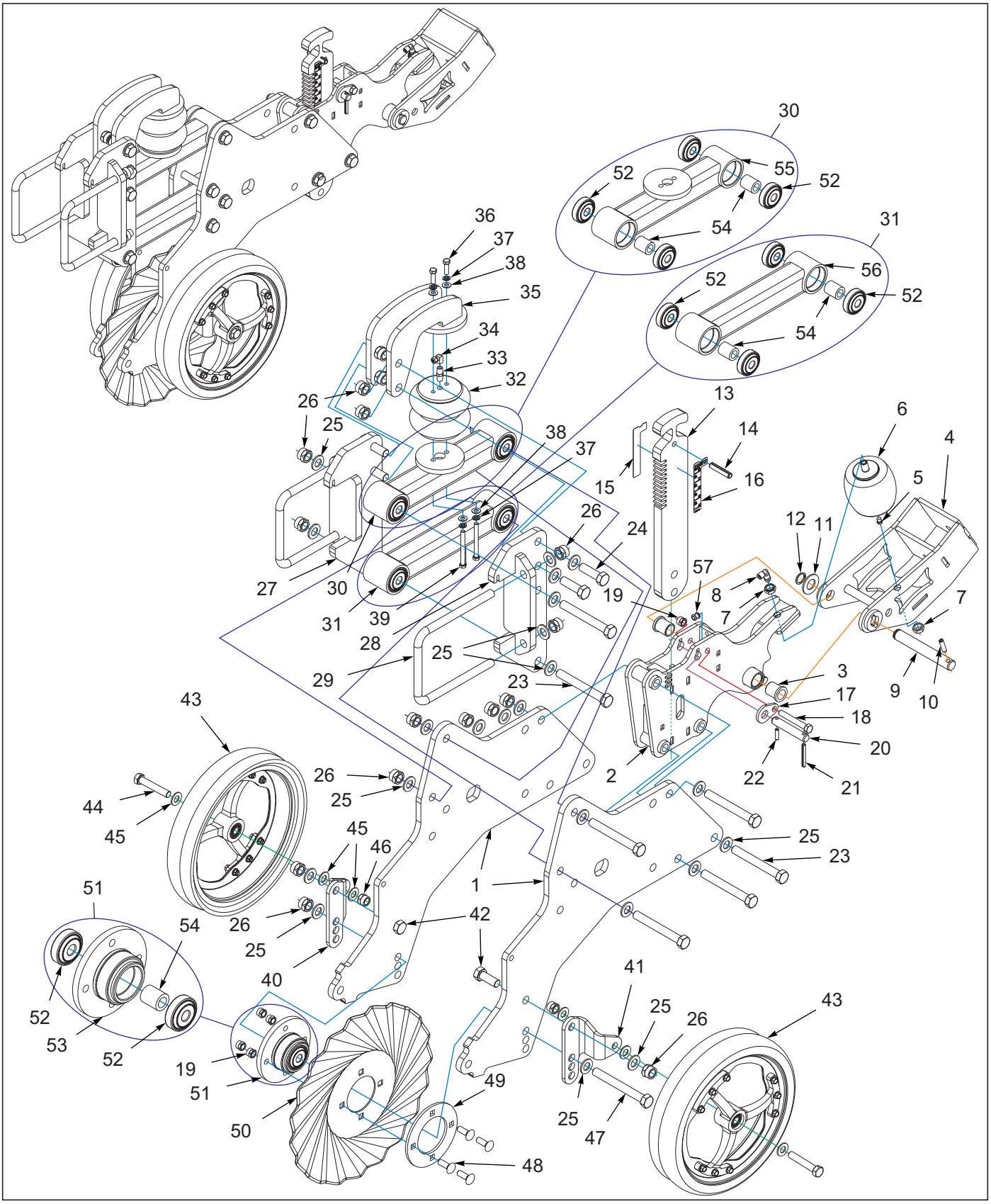

Figure 2-2: Row Unit Base Assembly

Row Unit Base Assembly

ITEM	PART NUMBER	DESCRIPTION	QTY.
1	257971	PLATE, SIDE	2
2	257966	MOUNT, SHANK	1
3	2-073-010012	BEARING FLANGE	2
4	257944	MOUNT, REEL PIVOT	1
5	40K2	PLUG, PIPE 1/8-27NPT HEX HD	1
6	258002	AIR BAG, REEL	1
7	1-511-010001-07	NUT, HEX JAM 5/8-11	2
8	151590	MALE ELBOW, 1/4 OD X 1/8 NPT	1
9	257948	PIN, REEL PIVOT	1
10	0600-375-01500	PIN ROLL 3/8X1-1/2	1
11	1-861-010032-24	WASHER FL 1IN NARROW ZP	1
12	1-630-010021-03	RING, RETAINING 1.0 HD	1
13	257970	SHANK, 1" ADJ	1
14	172802	PIN SPRING SLOTTED 1/2X2-1/2	1
15	258071	DECAL, COULTER DEPTH	1
16	258070	DECAL, SHANK DEPTH	1
17	257968	PLATE, KEEPER	1
18	1-654-010055-11	SCREW,HX CP 1/2-13UNCX3-1/2	1
19	1-512-010005-09	NUT,HEX,SLFLKG, 1/2-13 GRB	5
20	257969	PIN, SHANK STOP	1
21	1-647-010004240	PIN,SPRING,SLOTTED,5/16X2-1/2	1
22	3D478	ROLL PIN 5/16 X 1-1/8	1
23	W908409-4	SCREW 3/4-10X6 HEX HD CAP	7
24	1-654-010061-07	SCREW,HX CP 3/4-10UNCX2-1/2G5	4
25	1-861-010032-20	WASHER, FLAT,3/4 N ZP/CD	24
26	1-512-010005-15	NUT,HEX,SLFLKG GRB 3/4-10	19
27	257982	WELDMENT, RT FRAME MT	1
28	257983	WELDMENT, LT FRAME MT	1
29	2-102-010064	U-BOLT, SET BACK	2
30	257974	ASSY, UPPER ARM **(INCLUDES ITEMS 52, 54, 55)**	1
31	257975	ASSY, LOWER ARM **(INCLUDES ITEMS 52, 54, 56)**	1
32	258001	SPRING, AIR ROW UNIT	1
33	1-297-010019-03	FITTING,BRASS,HEX 1/4X1/4	1
34	1-297-010032-03	FITTING AIR 90 1/4FP TO 1/4T	1
35	257989	WELDMENT, TOP AIR BAG MOUNT	1
36	112838	SCREW HX CP,3/8-16X1.25 GR8	2
37	1-861-010034-11	WASHER, LKG HLCL SPR, 3/8	4
38	1-861-010032-10	WASHER, FLAT 3/8" N ZP/CD	4
39	122725	SCREW HX CP 3/8-16UNCX3-3/4G8	2
40	257993	GAUGE WHL BKT, RH	1
41	257994	GAUGE WHL BKT, LH	1
42	1-654-010061-05	SCREW,HHC,3/4-10UNCX2,GR5,ZP	2
43	257996	GAUGE WHEEL, 16" DIA X 3" WIDE	2
44	1-654-010059-11	SCREW,HX CP 5/8-11UNCX3.5GR5	2
45	1-861-010032-18	WASHER, FLAT 5/8 N ZP/CD	6
46	1-512-010005-13	NUT,HEX SLFLKG GRB 5/8-11	2
47	100855	SCREW, HHCS,3/4-10X6-1/2 GR5	1
48	1-654-010070-03	SCREW RDHD SQNK1/2-13X1-1/2	4
49	258015	PLATE, DOUBLE COULTER	1

ITEM	PART NUMBER	DESCRIPTION	QTY.
50	257997	COULTER, 18" DIR 20 WAVE,4 BLT	1
51	258011	ASSY, COULTER HUB **(INCLUDES ITEMS 52-54)**	1
52	257995	BEARING, 3/4" TRIPLE LIP SEAL	8
53	258012	WELDMENT, COULTER HUB	1
54	258016	RD TUBE, SPACER 1.469L	4
55	257976	WELDMENT, UPPER ARM	1
56	257977	WELDMENT, LOWER ARM	1
57	258075	GROMMET, HOLE 5/16IN-3/8T	1

Table provided for general use.

NOTES:

Row Cleaner Assembly

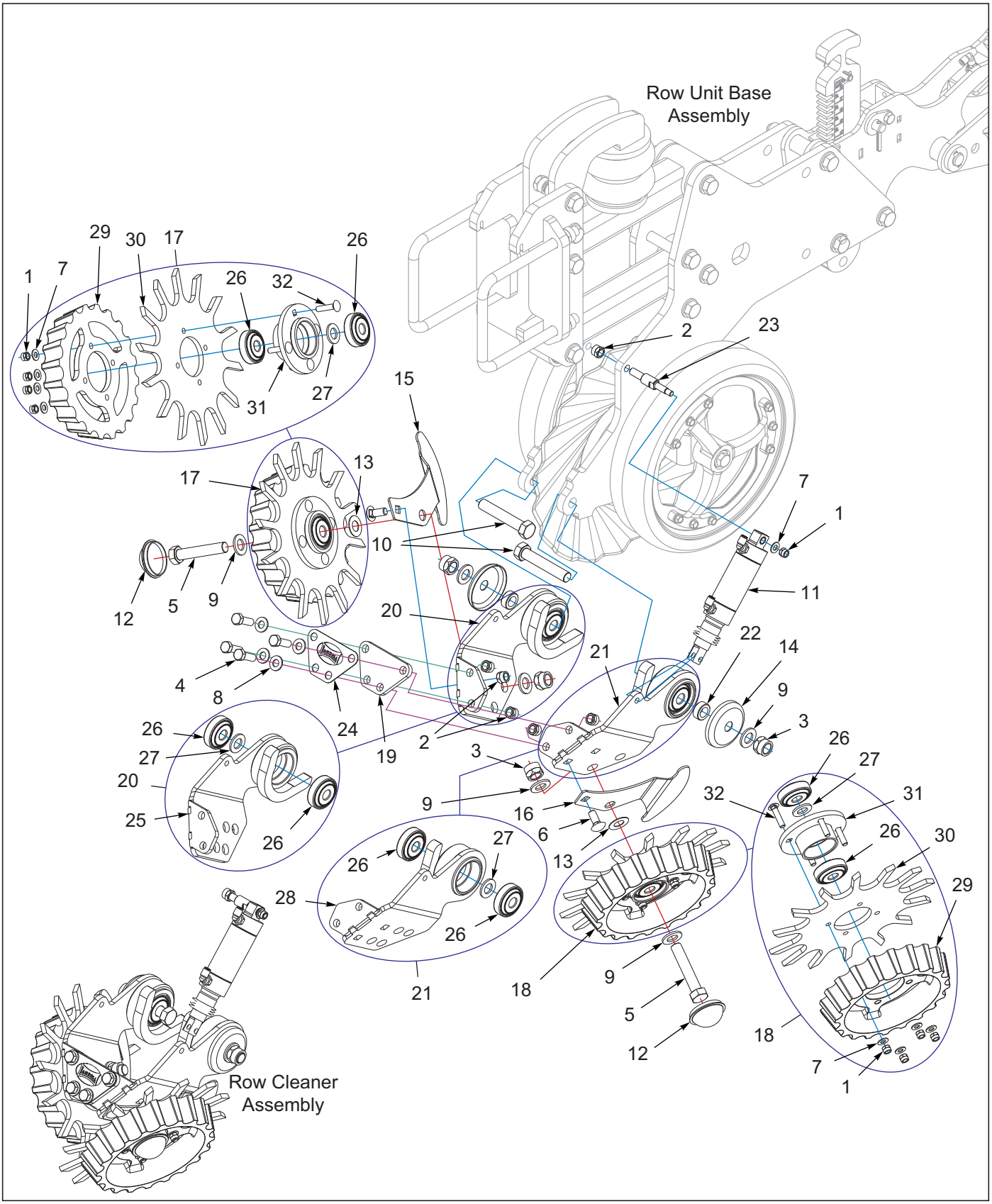

Figure 2-3: Row Cleaner Assembly

Row Cleaner Assembly

ITEM	PART NUMBER	DESCRIPTION	QTY.
--	258540	ASSY, ROW CLEANER	
1	1-512-010005-05	NUT, HEX, SLFLKG GRB 3/8-16	9
2	1-512-010005-09	NUT,HEX,SLFLKG, 1/2-13 GRB	7
3	1-512-010005-15	NUT,HEX,SLFLKG GRB 3/4-10	4
4	1-654-010055-03	SCREW,HEX CAP,1/2-13UNCX1-1/2	4
5	1-654-010061-13	SCREW,HX CP 3/4-10UNCX4 GR5	2
6	1-654-010070-02	SCREW 1/2-13X1-1/4 RD HD SQNK	2
7	1-861-010032-10	WASHER, FLAT 3/8" N ZP/CD	9
8	1-861-010032-14	WASHER, FLAT 1/2" N ZP/CD	4
9	1-861-010032-20	WASHER, FLAT,3/4 N ZP/CD	6
10	170119	BOLT, HEX,3/4-10UNC,4-1/4,GR5	2
11	258000	CYLINDER, AIR ROW CLEANERS	1
12	258004	DUST CAP, ROW CLEANERS	2
13	258006	MACH BUSHING, 3/4" 18 GA	2
14	258017	COVER, BEARING	2
15	258050	SCRAPER, RH	1
16	258051	SCRAPER, LH	1
17	258056	ASSY, FINGER BLADE RH **(INCLUDES ITEMS 1, 7, 26, 30-33)**	1
18	258057	ASSY, FINGER BLADE LH **(INCLUDES ITEMS 1, 7, 26, 30-33)**	1
19	258061	PLATE, TIE	1
20	258066	ASSY, RH ARM BRGS **(INCLUDES ITEMS 25, 26, 27)**	1
21	258067	ASSY, LH ARM BRGS **(INCLUDES ITEMS 26, 28, 27)**	1
22	258068	RD TUBE, SPACER, ROW CLNR	2
23	258069	PIN, UPPER CYLINDER PIVOT	1
24	258482	LOGO, ROW CLEANER	1
25	258064	WELDMENT, RH ROW CLEANER ARM	1
26	257995	BEARING, 3/4" TRIPLE LIP SEAL	8
27	622-3511-008	WASHER, FLAT 3/4 MIL-CARB SAE	4
28	258065	WELDMENT, LH ROW CLEANER ARM	1
29	258003	FLOAT WHEEL, ROW CLEANER	2
30	258040	PLATE, 13" DISC ROW CLEANER	2
31	258054	WELDMENT, ROW CLEANER HUB	2
32	103988	SCREW,RDHD,SQ NK3/8-16X1-3/4	8

Dual Coulter Assembly

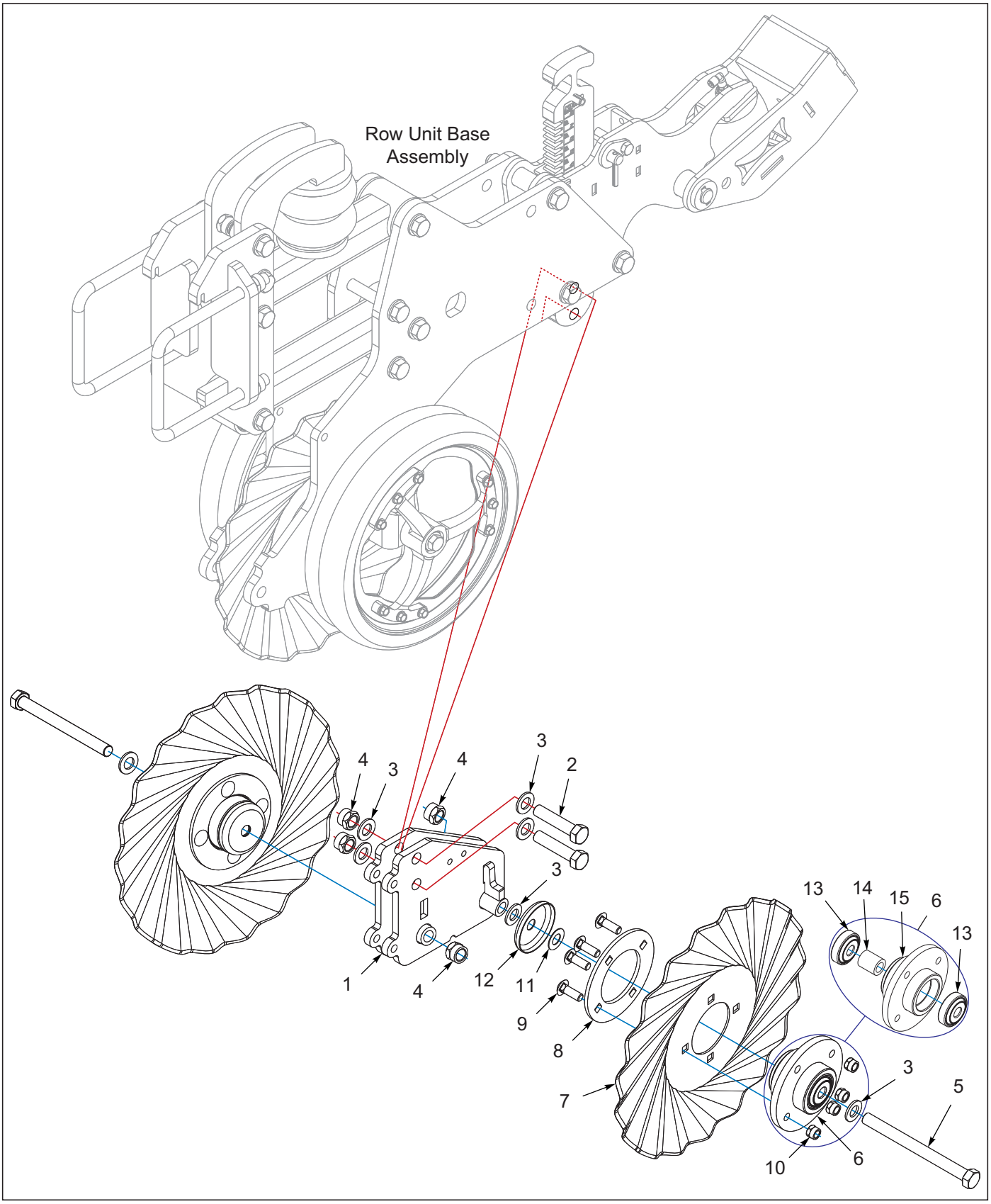

Figure 2-4: Dual Coulter Assembly

Dual Coulter Assembly

ITEM	PART NUMBER	DESCRIPTION	QTY.
1	258572	WELDMENT, RH DUAL COULTER **(SHOWN)**	1
1	258573	WELDMENT, LH DUAL COULTER	1
2	141776	SCREWHXCP 3/4-10UNCX3-1/2GR5B	2
3	1-861-010032-20	WASHER, FLAT,3/4 N ZP/CD	6
4	1-512-010005-15	NUT,HEX,SLFLKG GRB 3/4-10	4
5	1-654-010061-22	SCREW,HEX CAP,3/4-10UNCX8-1/2	2
6	258011	ASSY, COULTER HUB **(INCLUDES ITEMS 13-15)**	2
7	257997	COULTER, 18" DIR 20 WAVE,4 BLT	2
8	258015	PLATE, DOUBLE COULTER	2
9	1-654-010070-03	SCREW RDHD SQNK1/2-13X1-1/2	8
10	1-512-010005-09	NUT,HEX,SLFLKG, 1/2-13 GRB	8
11	258006	MACH BUSHING, 3/4" 18 GA	2
12	258017	COVER, BEARING	2
13	257995	BEARING, 3/4" TRIPLE LIP SEAL	4
14	258016	RD TUBE, SPACER 1.469L	2
15	258012	WELDMENT, COULTER HUB	2

Direct Shank Coulter Assembly

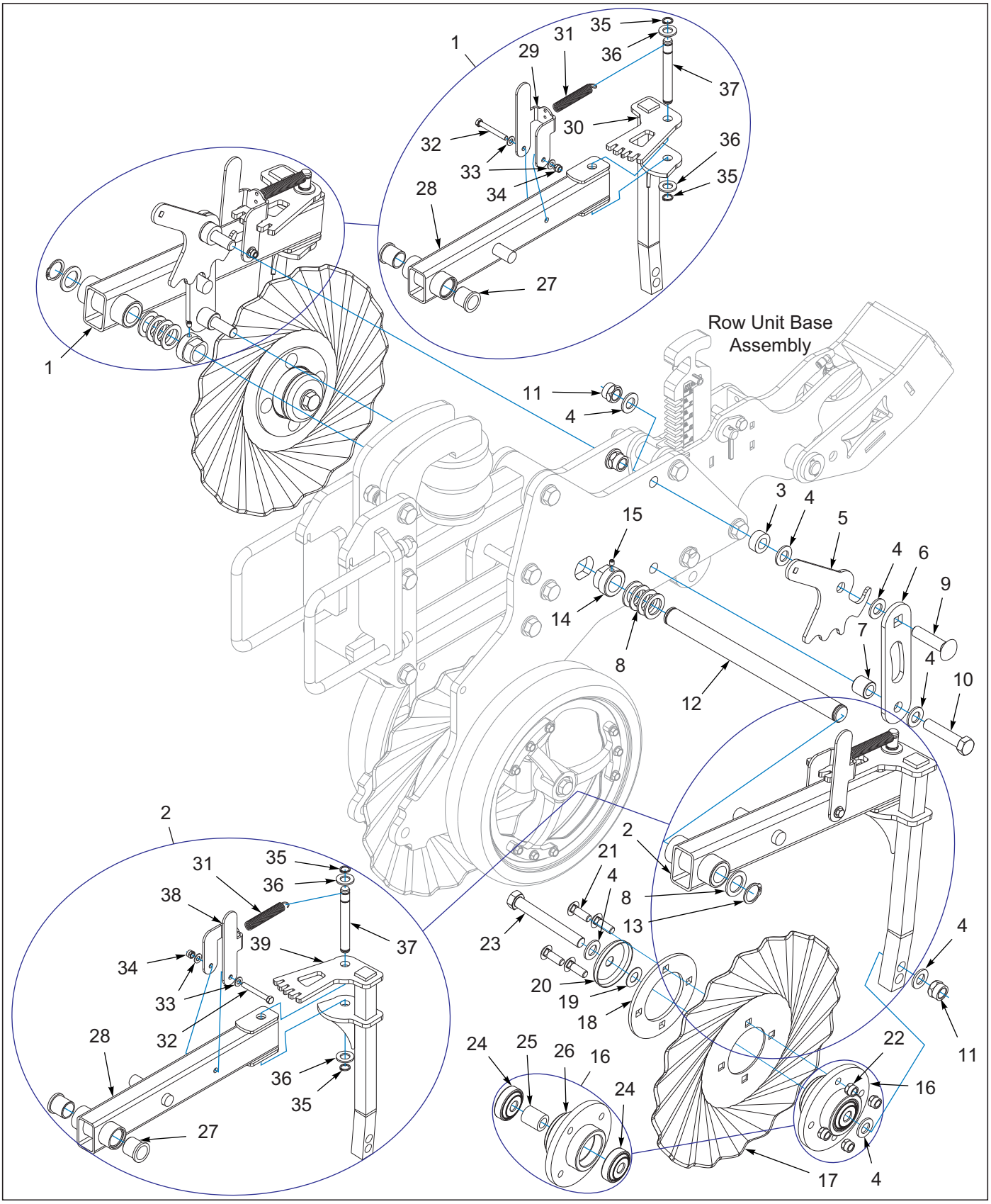

Figure 2-5: Direct Shank Coulter Assembly

Direct Shank Coulter Assembly

ITEM	PART NUMBER	DESCRIPTION	QTY.
1	258511	ASSY, BERMER ARM RT **(INCLUDES ITEMS 27-37)**	1
2	258512	ASSY, BERMER ARM LT **(INCLUDES ITEMS 27-28, 31-39)**	1
3	258027	SPACER, 5/8 BERMER STOP	2
4	1-861-010032-20	WASHER, FLAT,3/4 N ZP/CD	10
5	258031	PLATE, BERMER DEPTH STOP	2
6	258029	PLATE, BERMER STOP SUPPORT	2
7	258024	RD TUBE, SPACER, BERMER STOP	2
8	258008	MACH BUSHING, 1-1/4" 10 GA	8
9	214690	SCREW, RDH,SQ NK,3/4-10X3-1/4	2
10	141776	SCREWHXCP 3/4-10UNCX3-1/2GR5B	2
11	1-512-010005-15	NUT,HEX,SLFLKG GRB 3/4-10	4
12	257972	PIN, BERMER PIVOT	2
13	120454	RING,RETAINING 1.25 HD	2
14	258025	PIVOT PLUG, BERMER SHAFT	2
15	107-0975	SCREW SET LOCK 5/16-18X3/8LG	2
16	258011	ASSY, COULTER HUB **(INCLUDES ITEMS 24-26)**	2
17	257997	COULTER, 18" DIR 20 WAVE,4 BLT	2
18	258015	PLATE, DOUBLE COULTER	2
19	258006	MACH BUSHING, 3/4" 18 GA	2
20	258017	COVER, BEARING	2
21	1-654-010070-03	SCREW RDHD SQNK1/2-13X1-1/2	8
22	1-512-010005-09	NUT,HEX,SLFLKG, 1/2-13 GRB	8
23	W908409-4	SCREW 3/4-10X6 HEX HD CAP	2
24	257995	BEARING, 3/4" TRIPLE LIP SEAL	4
25	258016	RD TUBE, SPACER 1.469L	2
26	258012	WELDMENT, COULTER HUB	2
27	144460	BEARING, FLANGE 1-1/4	4
28	257954	ARM, BERMER PIVOT	1
29	258046	HANDLE RT, BERMER ANGLE ADJ	1
30	258018	WLDMT, RH DOWN ARM	1
31	258005	SPRING, TENSION 3/4 OD X 3 L	2
32	1-654-010051-13	SCREW,HX CP,3/8-16UNCX3,GR5	2
33	1-861-010032-10	WASHER, FLAT 3/8" N ZP/CD	4
34	1-512-010005-05	NUT, HEX, SLFLKG GRB 3/8-16	2
35	258074	SNAP RING, 3/4 HD EXT ZP	4
36	1-861-010032-20	WASHER, FLAT,3/4 N ZP/CD	4
37	257955	PIN, BERMER ANGLE ADJ	2
38	258047	HANDLE LT, BERMER ANGLE ADJ	1
39	258019	WLDMT, LH DOWN ARM	1

Mole Knife Assembly

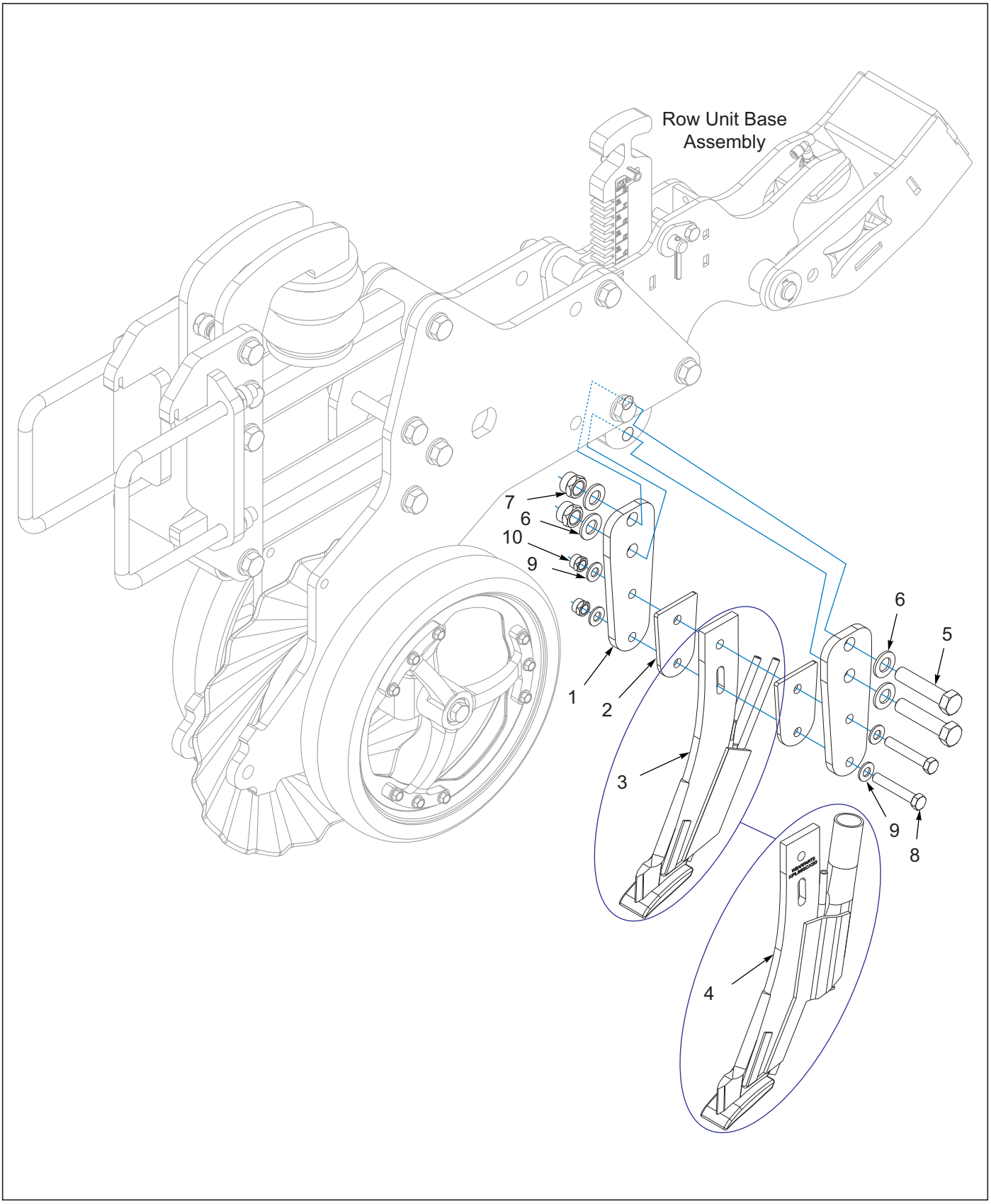

Figure 2-6: Mole Knife Assembly

Mole Knife Assembly

ITEM	PART NUMBER	DESCRIPTION	QTY.
1	258477	PLATE, SHANK MOUNT	2
2	258478	PLATE, SHANK SPACER	2
3	258100	MOLE KNIFE, NH3/LIQUID	1
4	258099	MOLE KNIFE, NH3/DRY	1
5	141776	SCREWHXCP 3/4-10UNCX3-1/2GR5B	2
6	1-861-010032-20	WASHER, FLAT,3/4 N ZP/CD	4
7	1-512-010005-15	NUT,HEX,SLFLKG GRB 3/4-10	2
8	1-654-010055-09	SCREW,HX CP,1/2-13UNCX3 GR5	2
9	1-861-010032-14	WASHER, FLAT 1/2" N ZP/CD	4
10	1-512-010005-09	NUT,HEX,SLFLKG, 1/2-13 GRB	2

Flat Reel Assembly

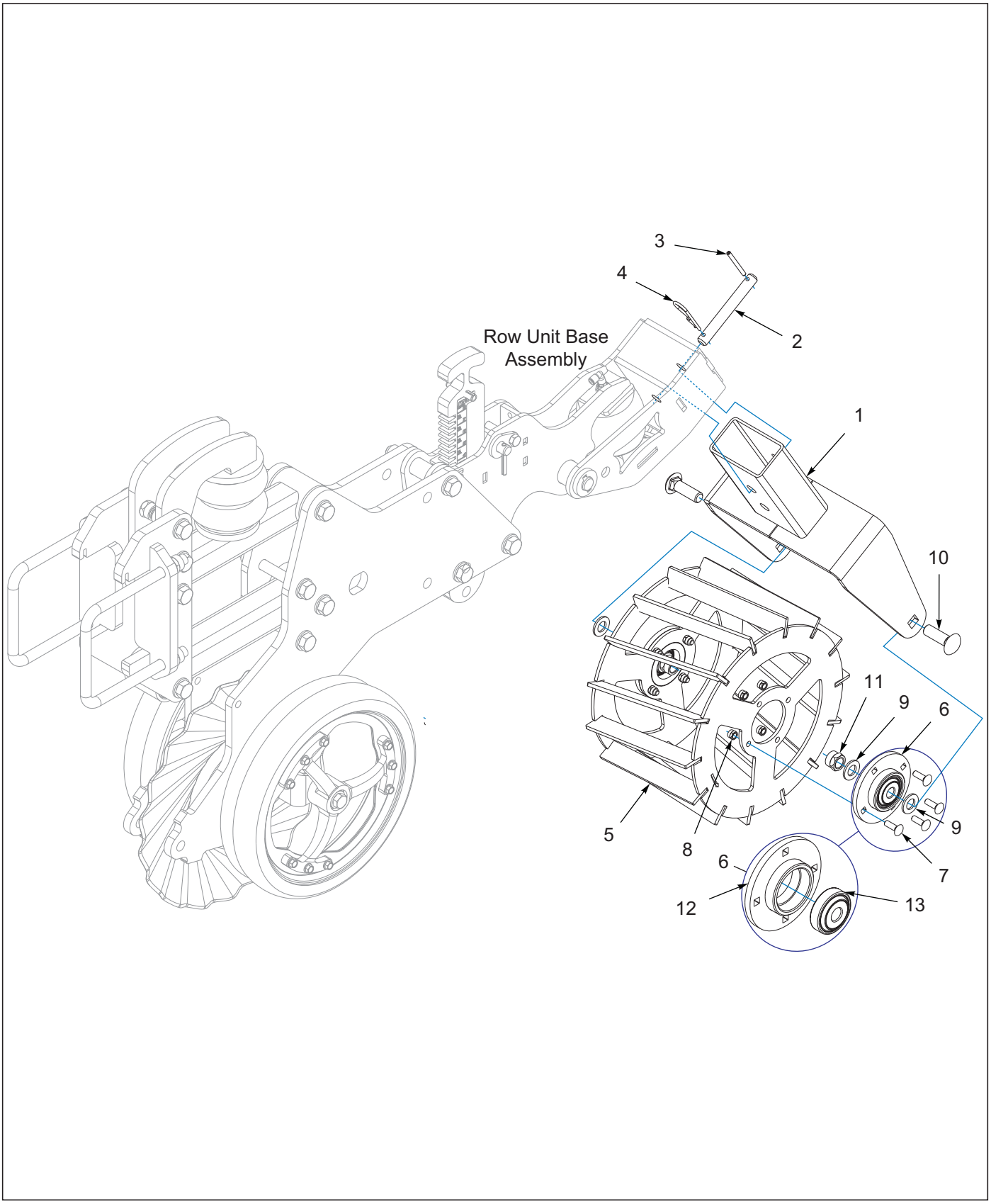

Figure 2-7: Flat Reel Assembly

Flat Reel Assembly

ITEM	PART NUMBER	DESCRIPTION	QTY.
1	257938	MOUNT, REEL	1
2	2-557-010409	PIN, WING LOCK	1
3	0600-250-03000	1/4X3 ROLL PIN ZP	1
4	1-557-010013	PIN, HAIR 3/16 DIA	1
5	257934	REEL WLDMT, Ø16" X 10" FLAT	1
6	257939	ASSY, REEL HUB **(INCLUDES ITEMS 12-13)**	2
7	101864	SCREW,RD HD 3/8-16X1-1/4 GR5	8
8	1-512-010005-05	NUT, HEX, SLFLKG GRB 3/8-16	8
9	1-861-010032-20	WASHER, FLAT,3/4 N ZP/CD	4
10	3/4-10X2-1/2CB	SCREW,RDH SQNK 3/4-10X2-1/2	2
11	1-512-010005-15	NUT,HEX,SLFLKG GRB 3/4-10	2
12	258035	WELDMENT, REEL-HUB	1
13	257995	BEARING, 3/4" TRIPLE LIP SEAL	1

Air Assemblies

Row Units/Compressor Air Assembly

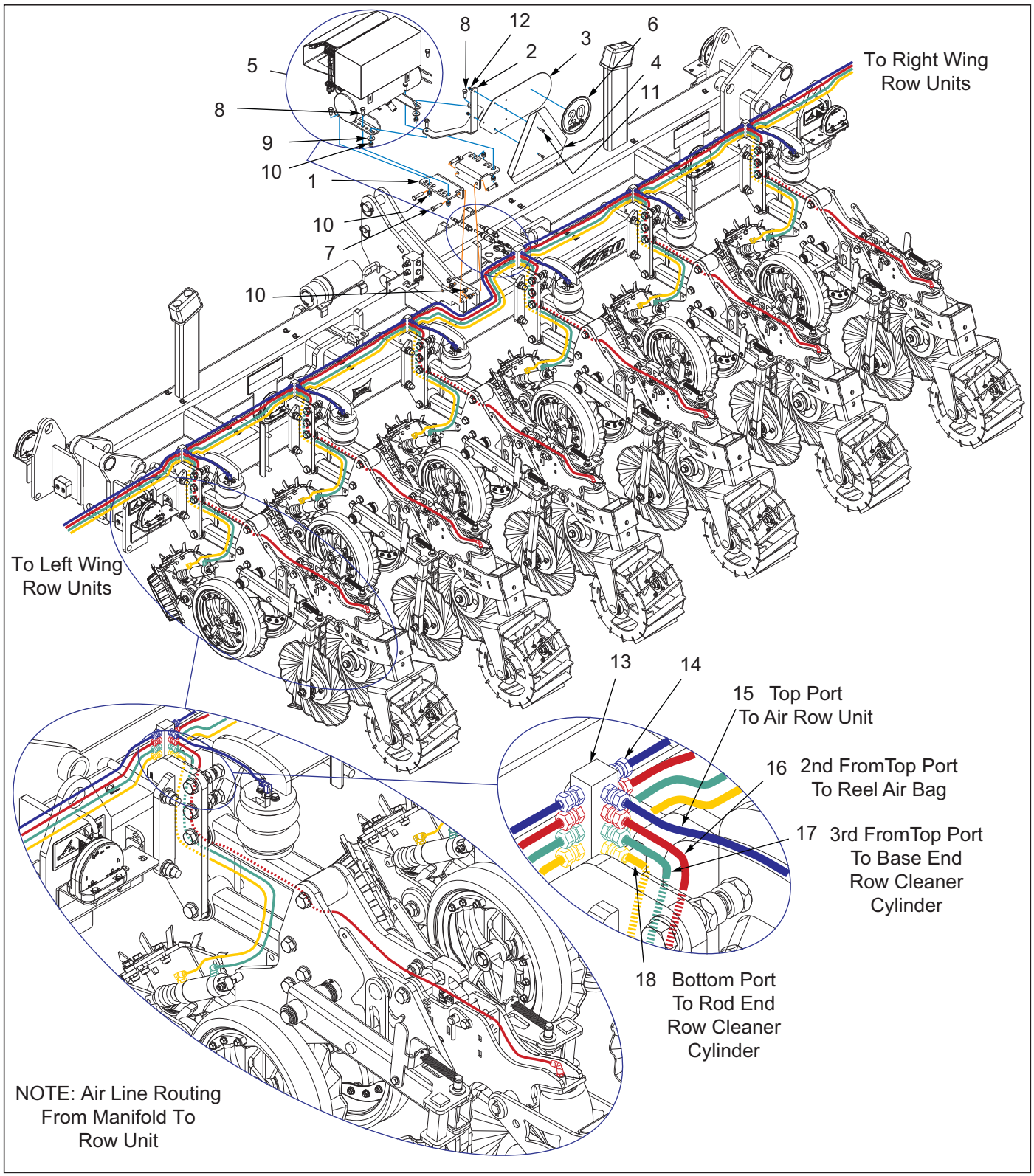

Figure 3-1: Row Units/Compressor Air Assembly

Row Units/Compressor Air Assembly

ITEM	PART NUMBER	DESCRIPTION	QTY.		
--	-----	2730 8 ROW 30” SPACING	*		
--	-----	2730 12 ROW 30” SPACING		*	
--	-----	2730 16 ROW 30” SPACING			*
1	258339	MOUNT, AIR COMPRESSOR	2	2	2
2	258480	MOUNT, SMV	1	1	1
3	224590	MOUNT, SIS DECAL	1	1	1
4	70260977	SMV EMBLEM	1	1	1
5	253899	COMPRESSOR-AIR, KIT **(SEE PAGE 3-3)**	1	1	1
6	224589	DECAL, SIS 20 MILE/H	1	1	1
7	1-654-010055-05	SCREW,HEX CAP,1/2-13UNCX2 GR5	4	4	4
8	1-654-010055-02	SCREW 1/2-13UNCX1-1/4 CP GR5	2	2	2
9	1-861-010032-15	WASHER, FLAT 1/2 W ZP/CD	2	2	2
10	1-512-010005-09	NUT,HEX,SLFLKG, 1/2-13 GRB	12	12	12
11	1-654-010047-06	SCREW,HX CP 1/4-20UNCX1 GR5	2	2	2
12	1-512-010005-01	NUT,HEX,SLFLKG GRB 1/4-20	2	2	2
13	258043	MANIFOLD, AIR CENTER	8	12	16
14	1-297-010007-04	FITTING, AIR, 1/4TUBEX1/8NPT	88	136	184
15	258039	TUBING 1/4 OD BLUE	AR	AR	AR
16	258038	TUBING 1/4 OD RED	AR	AR	AR
17	213452	TUBING 1/4 OD DARK GREEN	AR	AR	AR
18	213449	TUBING 1/4 OD YELLOW	AR	AR	AR

Air Compressor Assembly

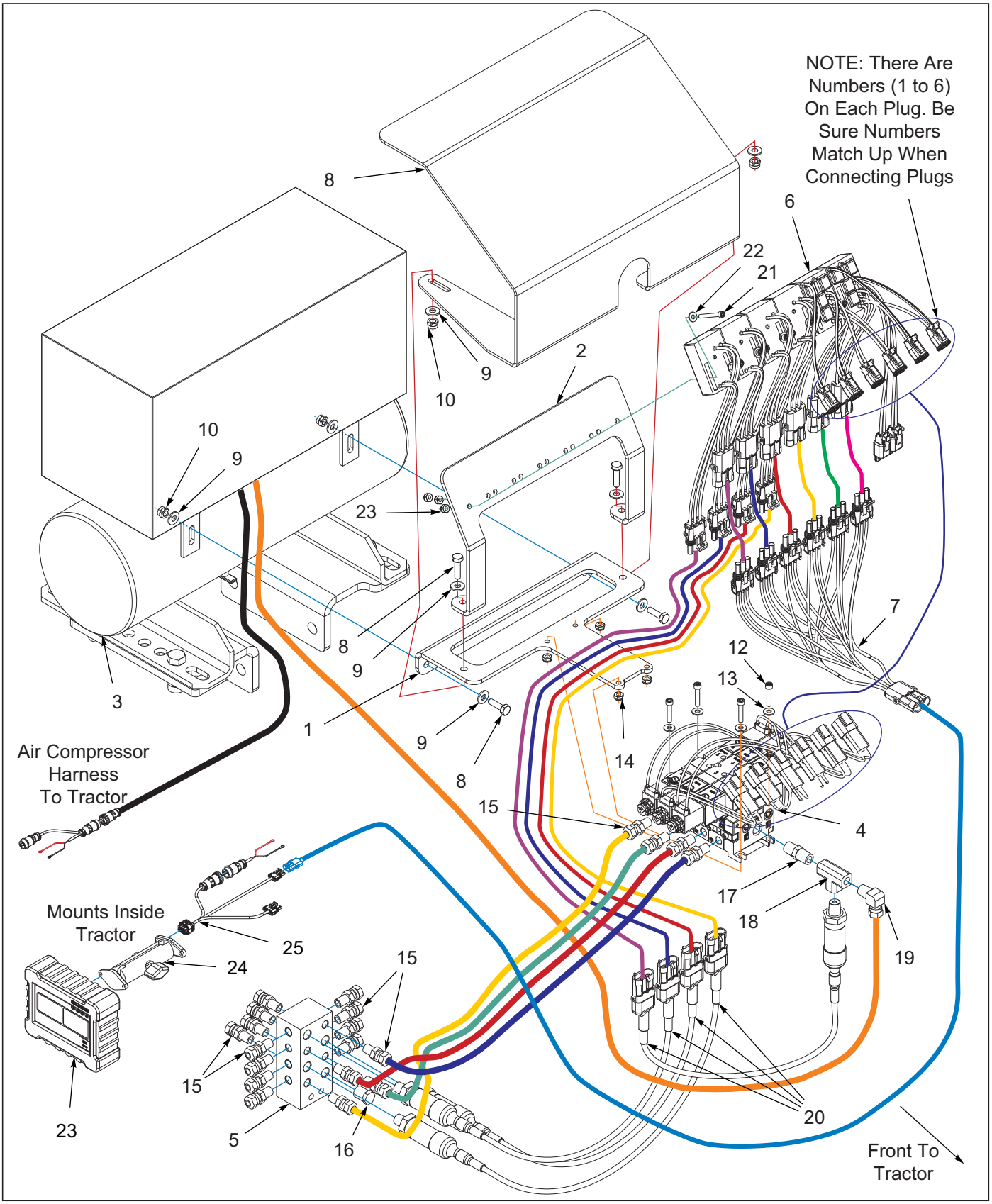

Figure 3-2: Air Compressor Assembly

Air Compressor Assembly

ITEM	PART NUMBER	DESCRIPTION	QTY.
--	253899	COMPRESSOR-AIR, KIT	
1	259963	PLATE, AIR MANIFOLD MOUNT	1
2	259964	PLATE, LOUP MOUNT	1
3	258322	COMPRESSOR-AIR, 12 VOLT, KIT	1
4	258091	MANIFOLD-VALVE, AIR ASM	1
5	258595	MANIFOLD, AIR MAIN/SENSOR	1
6	259946	RELAY-SMART, ASSEMBLY	1
7	259943	HARNESS-SPLITTER, POWER, ASM	1
8	1-654-010047-06	SCREW,HX CP 1/4-20UNCX1 GR5	4
9	1-861-010032-06	WASHER, FLAT 1/4 N ZP/CD	8
10	1-512-010005-01	NUT,HEX,SLFLKG GRB 1/4-20	4
11	1-512-010003-03	NUT,HX 8-32,SLF-LKG W/NYL	8
12	196617	SCREW HX SKT HD 10-24UNCX1ZP	4
13	1-861-010032-03	WASHER, FLAT #10 ZP/CD	4
14	1-512-010003-06	NUT,HEX,SLFLKG W/NLY 10-24	4
15	1-297-010007-04	FITTING, AIR, 1/4TUBEX1/8NPT	20
16	1-297-010033-02	FTG, BRASS PLUG HEX 1/4NPT	1
17	1-297-010019-03	FITTING,BRASS,HEX 1/4X1/4	1
18	1-297-010009-02	FITTING,AIR,PIPE TEE 1/4	1
19	1-297-010008-07	FITTING AIR 90 1/4TUBEX1/4NPT	1
20	259941	SENSOR-PRESSURE, AIR, ASM	4
21	259966	SCREW HX SKT HD 8-32UNCX1.5ZP	8
22	118-7293	#8 SAE FLAT WASHER ZP	8
23	258090	MONITOR, 2700 ELITE MINI	1
24	174434	MOUNT, LOUP II MONITOR	1
25	224632	CABLE, MONITOR POWER MINI	1

Hydraulic Assemblies

Hydraulic Assembly Fold

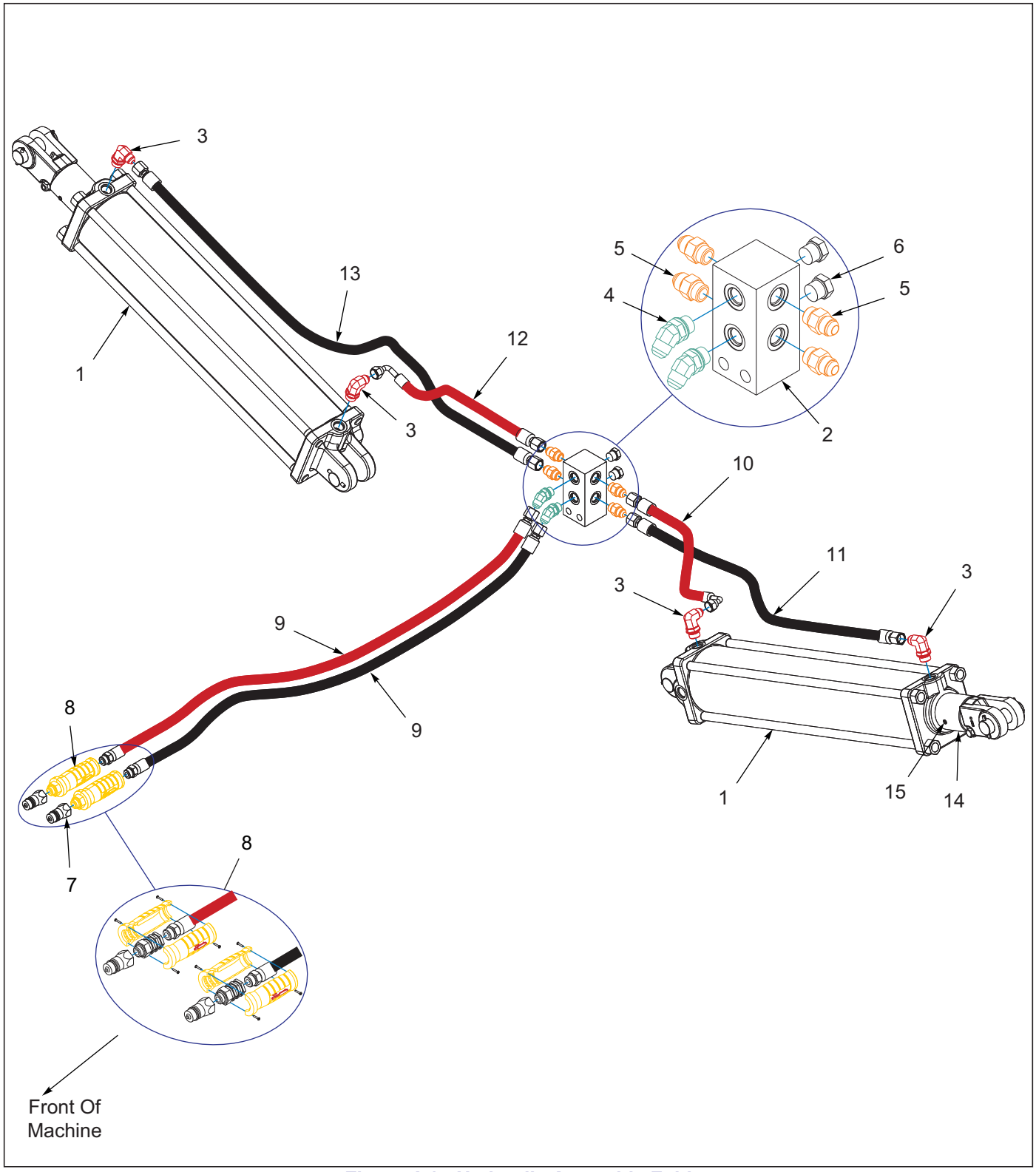

Figure 4-1: Hydraulic Assembly Fold

Hydraulic Assembly Fold

ITEM	PART NUMBER	DESCRIPTION	QTY.
1	1-242-010172-5	CYL HYD 5X24 3000PSI	2
2	2-474-010022	MANIFOLD HYDRAULIC, 8 HOSE	1
3	162778	EL 90 7/8 ORING 3/4 JIC 1/16	4
4	2061-8-8S	ADAPTER, 45, #8 O-RING-TUBE	2
5	202702-8-8S	ADAPTER #8 O-RING TO #8 TUBE	4
6	1-007-010025	PLUG, 3/4-16 O-RING BOSS	2
7	141828	COUPLER,MALE 3/4-16 O-RING	2
8	251973	HOSE HANDLES, YELLOW, 1/2" SET	1
9	258332	HOSE ASSY, 3/8x56 #8JICX#8MOR	2
10	203423	HOSE ASSY 3/8X29 #8STR-#8-90 **(2730-12-30)**	1
10	259933	HOSE ASSY,3/8X60 #8STR-#8-90 **(2730-16-30)**	1
11	181801	HOSE ASSY, 3/8x58 #8 JIC SWIV **(2730-12-30)**	1
11	192481	HOSE ASSY 3/8 X 88 **(2730-16-30)**	1
12	203426	HOSE ASSY 3/8X39 #8STR-#8-90 **(2730-12-30)**	1
12	175107	HOSE ASM,3/8X70,#8STR-#8-90 **(2730-16-30)**	1
13	153843	HOSE ASSY 3/8X67 #8 JIC SWIV **(2730-12-30)**	1
13	260557	HOSE ASSY, 3/8 X 98 #8STR JIC **(2730-16-30)**	1
14	258475	CYLINDER STOP, ø2.031 x 3.063	2
15	1P444	SET SCREW, 3/8-16 X 3/4 NYLON	2

Chapter 5

TABLE OF CONTENTS

Cylinders

Cylinder Assembly 5 x 24

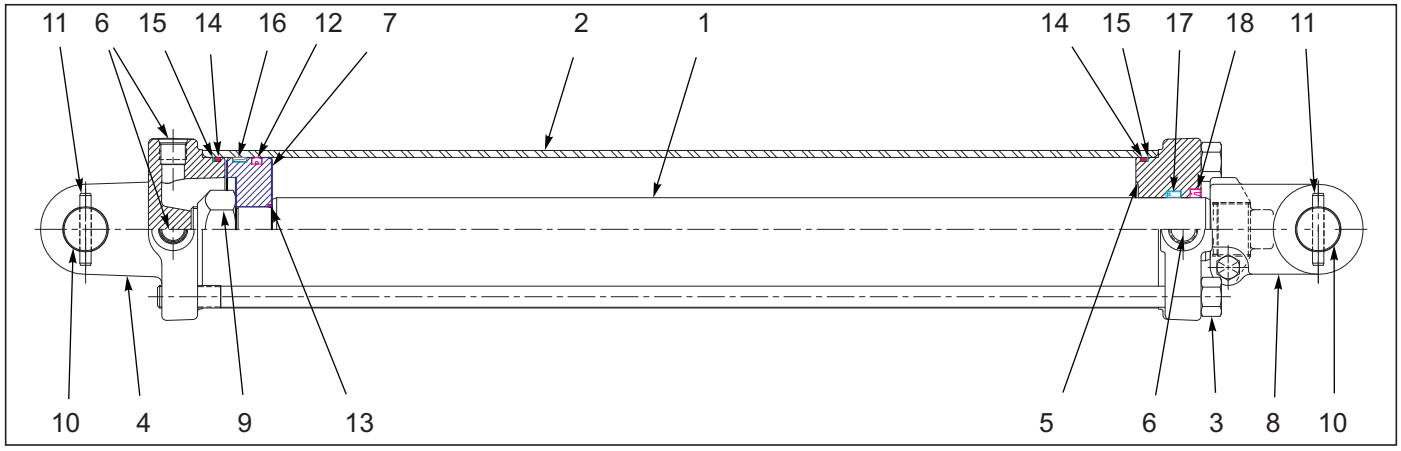

Figure 5-1: Cylinder Assembly 5 x 24

Cylinder Assembly 5 x 24

ITEM	PART NUMBER	DESCRIPTION	QTY.
--	1-242-010172-5	CYL HYD 5X24 3000PSI	
1	-----	PISTON ROD	1
2	-----	TUBE	1
3	-----	TIEROD ASSY	4
4	111878	BUTT 9800 #142100050	1
5	111873	GLAND 9800 #082100274	1
6	-----	PORT PLUG	3
7	-----	PISTON	1
8	100000362	CLEVIS FOR 3-242-010050 CYL	1
9	-----	LOCKNUT	1
10	111880	PIN, CLEVIS 9800 #190600084	2
11	111789	PIN,ROLL #190100057 (ø1/4 x 2)	4
12	-----	CROWN SEAL	1
13	-----	O- RING	1
14	-----	O- RING	2
15	-----	BU- WASHER	2
16	-----	BEARING RING	1
17	-----	U- CUP	1
18	-----	WIPER	1
19	125488	SEAL KIT FOR 1-242-010172-5 **(NOT SHOWN) (INCLUDES ITEMS 12-18)**	

Table provided for general use.

NOTES:

Electrical

Electrical Assembly W/LED Lights

7-PIN CONN.	4-PIN TOWER	CIRCUIT	WIRE COLOR
1	D	GROUND	WHITE
2	–	WORK LAMPS	BLACK
3	B	LEFT FLASHING & TURN	YELLOW
4	–	STOP LAMPS	RED
5	A	RIGHT FLASHING & TURN	GREEN
6	C	TAIL LAMPS	BROWN
7	–	SWITCHED POWER (12 V)	BLUE

MAIN WARNING LIGHT HARNESS - WIRING CHART
(NOTE: The Color Of The Wire Jacket Does Not Necessarily Match The Color Of The 7 Pin Connector)

	RIGHT AMBER	RIGHT RED		LEFT RED	LEFT AMBER
	2-PIN TOWER	3-PIN TOWER	6-PIN SHROUD	3-PIN TOWER	2-PIN TOWER
BLACK LEFT TURN			A	C	
WHITE GROUND	A	A	B	A	A
BROWN TAIL LIGHT		B	C	B	
YELLOW LEFT TURN			D		B
GREEN RIGHT TURN	B		E		
RED RIGHT TURN		C	F		

REAR WARNING LIGHT HARNESS - WIRING CHART

Figure 6-1: Electrical Assembly W/LED Lights (1 of 2)

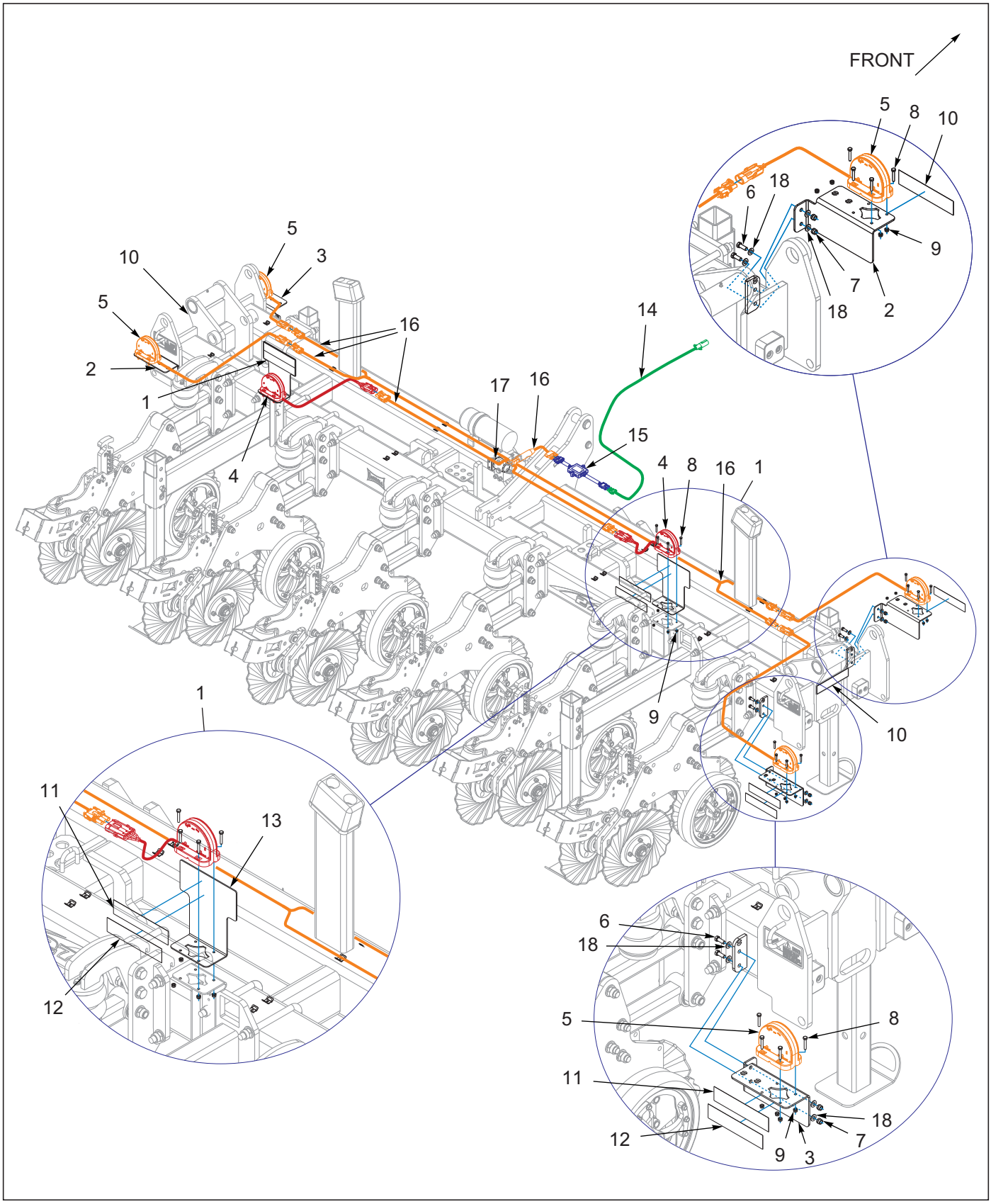

Figure 6-2: Electrical Assembly W/LED Lights (2 of 2)

Electrical Assembly W/LED Lights

ITEM	PART NUMBER	DESCRIPTION	QTY.
1	164140	REFLECTOR ASSY **(INCLUDES ITEMS 11-13)**	2
2	258317	MOUNT, RH LED LIGHT	2
3	258318	MOUNT, LH LED LIGHT	2
4	174435	LAMP, AG RED SINGLE LED	2
5	174436	LAMP, AG AMBER SINGLE LED	4
6	1-654-010051-06	SCREW,HEX CAP 3/8-16UNCX1-1/4	8
7	1-512-010005-05	NUT, HEX, SLFLKG GRB 3/8-16	8
8	1-654-010047-08	SCREW HX CP,1/4-20UNCX1-1/2G5	24
9	1-512-010005-01	NUT,HEX,SLFLKG GRB 1/4-20	24
10	528934	REFLECTOR - YELLOW	4
11	528938	STRIPE, ORANGE	4
12	528933	REFLECTOR - RED	4
13	164139	MOUNT, REFLECTOR	2
14	178514	HARNESS,7 PIN/4PIN WP, 10'	1
15	174437	MODULE, AG FLASHER CONTROL	1
16	258363	HARNESS, REAR WARNING LIGHTS	1
17	2-368-010287	HARNESS, STOR-A-WAY **(SEE PAGE 1-1)**	1
18	1-861-010032-10	WASHER, FLAT 3/8" N ZP/CD	16

Table provided for general use.

NOTES:

Decals

Decals



1



2



3

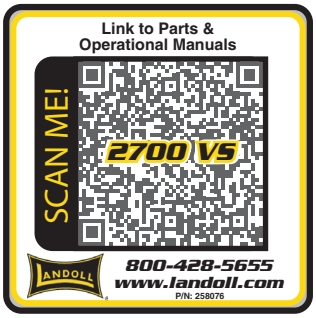

4

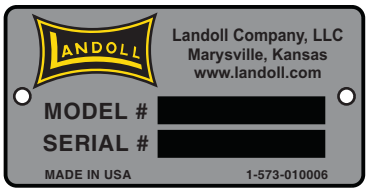

5



6



7



8



9



10



11



12



13



14



15

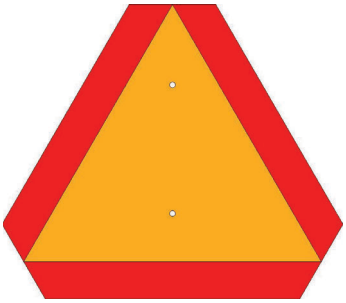

16

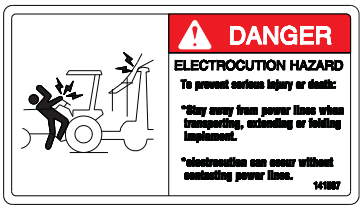

17

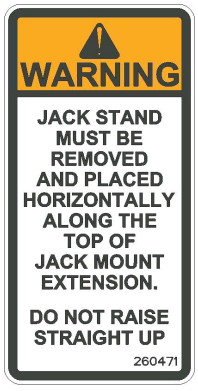

18

Figure 7-1: Decals (1 of 2)

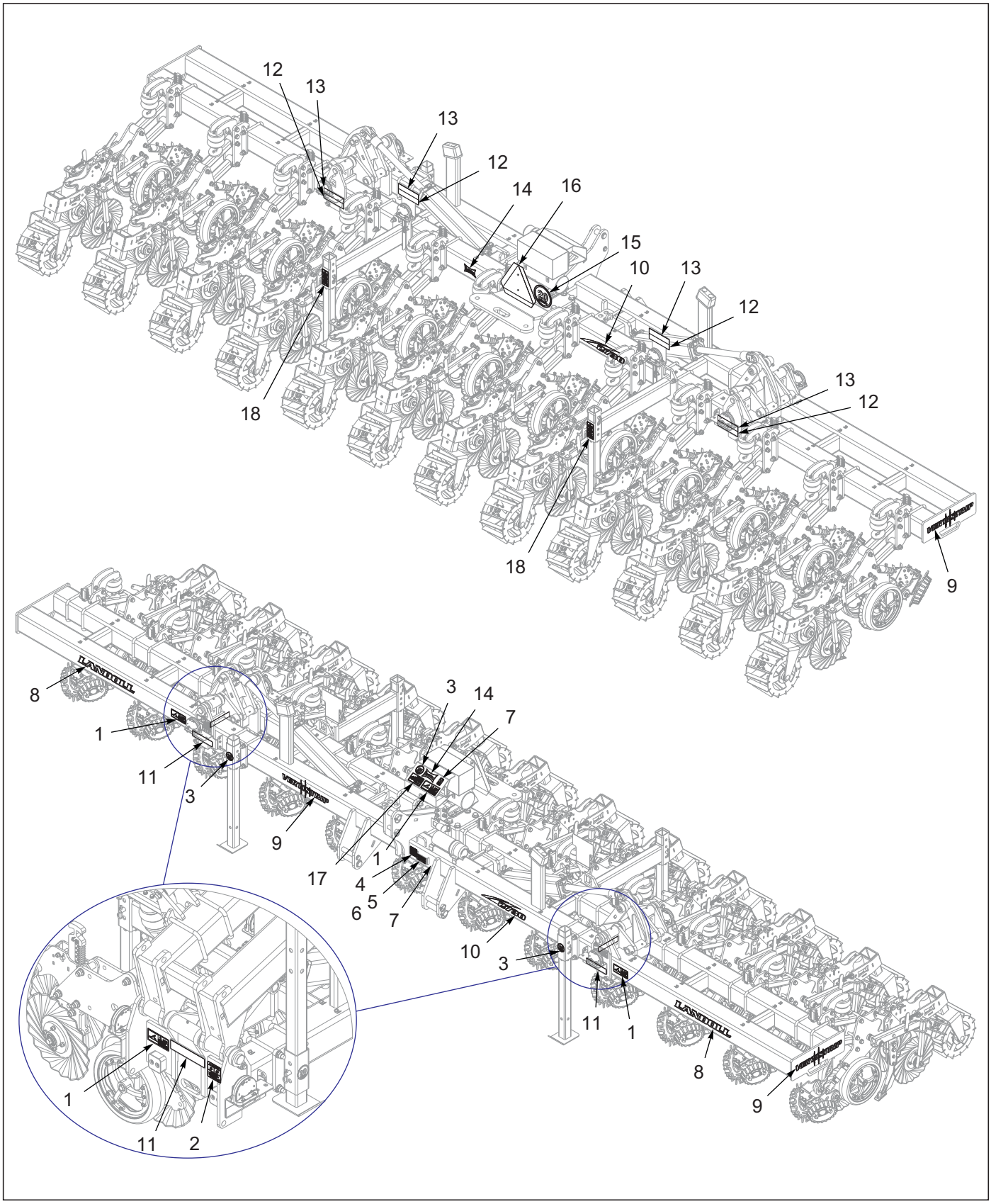

Figure 7-2: Decals (2 of 2)

Decals

ITEM	PART NUMBER	DESCRIPTION	QTY.
1	2-573-010037	DECAL, DANGER, WING	5
2	247227	DECAL, DANGER CRUSHING	2
3	144193	DECAL, SIS 20 MPH	3
4	258076	DECAL, QR CODE 2700 SERIES	1
5	1-573-010006	PLACARD, NAME	1
6	156010	RIVET, BLIND .156X1/2 GRIP	2
7	2-573-010198	DECAL, MEMBER FEMA	1
8	141260	DECAL, LANDOLL 2-3/4" TALL	2
9	258073	DECAL, VERTISTRIP	3
10	258007	DECAL, 2730	2
11	528934	REFLECTOR - YELLOW	4
12	528933	REFLECTOR - RED	4
13	528938	STRIPE, ORANGE	4
14	141259	DECAL, LANDOLL, YELLOW	1
15	224589	DECAL, SIS 20 MILE/H	1
16	70260977	SMV EMBLEM	1
17	141597	DECAL, DANGER ELECTROCUTION	1
18	260471	DECAL, JACK STAND	2

Table provided for general use.

NOTES:

Chapter 8

TABLE OF CONTENTS

Attachments

Chapter 9

TABLE OF CONTENTS

Glossary

For clarity this glossary of industry standard abbreviations and their definitions are provided.

A

ASM . . . . . Assembly

B

BATT . . . . . Battery
BHSC . . . . . Button Head Socket Cap
BLK . . . . . Black

C

CB . . . . . Carriage Bolt
CONN . . . . . Connector
CRG . . . . . Carriage
CTSK . . . . . Countersunk
CTWT . . . . . Counterweight
CVR . . . . . Cover
CYD . . . . . Cylinder

D

DBL . . . . . Double
DIA . . . . . Diameter

E

ENCLSD . . . . . Enclosed

F

FHCS . . . . . Flanged Head Cap Screw
FHHCS . . . . . Flanged Hex Head Cap Screw
FL OR **FLG** . . . . . Flange
FLT . . . . . Flat

G

GA . . . . . Gauge

H

HHCS . . . . . Hex Head Cap Screw
HCS . . . . . High Carbon Steel
HD . . . . . Head
HLCL . . . . . Helical
HCSKT . . . . . Hex Socket
HSFC . . . . . Hex Socket Flat Countersunk
HYD . . . . . Hydraulic

I

ID . . . . . Inside Diameter

L

LH . . . . . Lefthand
LKG OR **LOCK** . . . . . Locking
LWR . . . . . Lower

M

MANF . . . . . Manifold
MNT . . . . . Mount

N

NRW . . . . . Narrow
- - - - - . . . . . Not Serviced Separately

O

OD . . . . . Outside Diameter
OHG . . . . . Overhead Guard
ORFS OR **ORS** . . . . . O-Ring Seal
ORP OR **ORB** . . . . . O-Ring Boss

P

P-STEER . . . . . Power Steering
PTFE . . . . . Polytetrafluoroethylene (Teflon)

R

RH . . . . . Righthand
RND . . . . . Round

S

SER . . . . . Series
SHCS . . . . . Socket Head Cap Screw
SHLD . . . . . Shield
SKT . . . . . Socket
SLFLKG . . . . . Selflocking
SOC . . . . . Socket
SPDT . . . . . Single Pole Double Throw
SPR . . . . . Spring
SQ . . . . . Square
SRTD . . . . . Serrated
SSCR . . . . . Setscrew
SST . . . . . Stainless Steel
STD . . . . . Standard

U

UPR . . . . . Upper

W

WHL . . . . . Wheel
WLD OR **WLDMT** . . . . . Weldment

Chapter 10

TABLE OF CONTENTS

Index

Numerics

0600-250-03000 . . . . . *1-2*, *2-16*
0600-375-01500 . . . . . *2-4*
100000362 . . . . . *5-1*
1-007-010025 . . . . . *4-2*
100855 . . . . . *2-4*
101864 . . . . . *2-16*
103988 . . . . . *2-8*
107-0975 . . . . . *2-12*
111789 . . . . . *5-1*
111873 . . . . . *5-1*
111878 . . . . . *5-1*
111880 . . . . . *5-1*
112838 . . . . . *2-4*
118-7293 . . . . . *3-4*
120454 . . . . . *1-2*, *2-12*
122725 . . . . . *2-4*
1-242-010172-5 . . . . . *1-4*, *4-2*, *5-1*
125488 . . . . . *5-1*
128874 . . . . . *1-2*
1-297-010007-04 . . . . . *2-2*, *3-2*, *3-4*
1-297-010008-07 . . . . . *3-4*
1-297-010009-02 . . . . . *3-4*
1-297-010019-03 . . . . . *2-4*, *3-4*
1-297-010032-03 . . . . . *2-4*
1-297-010033-02 . . . . . *2-2*, *3-4*
134912 . . . . . *1-4*
141259 . . . . . *7-3*
141260 . . . . . *7-3*
141597 . . . . . *7-3*
141776 . . . . . *2-10*, *2-12*, *2-14*
141828 . . . . . *4-2*
144193 . . . . . *7-3*
144460 . . . . . *2-12*
150076 . . . . . *1-2*
1-511-010001-07 . . . . . *2-4*
1-512-010003-03 . . . . . *3-4*
1-512-010003-06 . . . . . *3-4*
1-512-010005-01 . . . . . *1-2*, *2-2*, *3-2*, *3-4*, *6-3*
1-512-010005-05 . . . . . *2-8*, *2-12*, *2-16*, *6-3*
1-512-010005-09 *1-2*, *1-4*, *2-4*, *2-8*, *2-10*, *2-12*, *2-14*, *3-2*
1-512-010005-13 . . . . . *2-4*
1-512-010005-15 *1-2*, *2-2*, *2-4*, *2-8*, *2-10*, *2-12*, *2-14*, *2-16*
151590 . . . . . *2-4*
153843 . . . . . *4-2*
1-557-010013 . . . . . *1-2*, *2-16*
156010 . . . . . *7-3*
156614 . . . . . *1-2*
1-573-010006 . . . . . *7-3*
162037 . . . . . *1-2*
162778 . . . . . *4-2*
1-630-010021-02 . . . . . *1-2*
1-630-010021-03 . . . . . *2-4*
164139 . . . . . *6-3*
164140 . . . . . *6-3*
1-647-010004240 . . . . . *2-4*
1-654-010047-04 . . . . . *1-2*
1-654-010047-06 . . . . . *1-2*, *3-2*, *3-4*
1-654-010047-08 . . . . . *6-3*
1-654-010047-09 . . . . . *2-2*
1-654-010051-06 . . . . . *6-3*
1-654-010051-13 . . . . . *2-12*
1-654-010055-02 . . . . . *1-4*, *3-2*
1-654-010055-03 . . . . . *2-8*
1-654-010055-05 . . . . . *3-2*
1-654-010055-07 . . . . . *1-2*
1-654-010055-09 . . . . . *2-14*
1-654-010055-11 . . . . . *1-2*, *1-4*, *2-4*

1-654-010059-11 2-4
1-654-010061-05 2-4
1-654-010061-07 2-4
1-654-010061-13 2-8
1-654-010061-22 2-10
1-654-010070-02 2-8
1-654-010070-03 ..... 2-4, 2-10, 2-12
170119 2-8
171024 ..... 1-2, 1-4
172802 2-4
172905 1-2
174434 3-4
174435 6-3
174436 6-3
174437 6-3
175107 4-2
178514 6-3
181801 4-2
1-861-010032-03 3-4
1-861-010032-06 ..... 2-2, 3-4
1-861-010032-10 ..... 2-4, 2-8, 2-12, 6-3
1-861-010032-14 ..... 2-8, 2-14
1-861-010032-15 ..... 1-2, 1-4, 3-2
1-861-010032-18 2-4
1-861-010032-20 1-2, 2-2, 2-4, 2-8, 2-10, 2-12, 2-14, 2-16
1-861-010032-24 2-4
1-861-010034-11 2-4
1-861-010034-13 ..... 1-2, 1-4
192481 4-2
196617 3-4
1P444 ..... 1-4, 4-2
202702-8-8S 4-2
203423 4-2
203426 4-2
2061-8-8S 4-2
2-073-010012 2-4
2-102-010064 ..... 1-2, 2-2, 2-4
213449 3-2
213452 3-2
214690 2-12
2-150-010174 1-4
218533 1-2
224589 ..... 3-2, 7-3
224590 3-2
224632 3-4
2-368-010287 ..... 1-2, 6-3
247227 7-3
2-474-010022 ..... 1-2, 4-2
251973 4-2
253899 ..... 3-2, 3-4
2-557-010409 ..... 1-2, 2-16
256760 1-2
256761 1-4
256766 1-4
256767 1-4
2-573-010037 7-3
2-573-010198 7-3
257934 2-16
257938 2-16
257939 2-16
257944 2-4
257948 2-4
257954 2-12
257955 2-12
257966 2-4
257968 2-4
257969 2-4
257970 2-4
257971 2-4
257972 2-12
257974 2-4
257975 2-4
257976 2-5
257977 2-5
257982 2-4

257983 2-4
257989 2-4
257993 2-4
257994 2-4
257995 . . . . . 2-5, 2-8, 2-10, 2-12, 2-16
257996 2-4
257997 . . . . . 2-5, 2-10, 2-12
258000 2-8
258001 2-4
258002 2-4
258003 2-8
258004 2-8
258005 2-12
258006 . . . . . 2-8, 2-10, 2-12
258007 7-3
258008 2-12
258011 . . . . . 2-5, 2-10, 2-12
258012 . . . . . 2-5, 2-10, 2-12
258015 . . . . . 2-4, 2-10, 2-12
258016 . . . . . 2-5, 2-10, 2-12
258017 . . . . . 2-8, 2-10, 2-12
258018 2-12
258019 2-12
258024 2-12
258025 2-12
258027 2-12
258029 2-12
258031 2-12
258033 2-2
258035 2-16
258038 3-2
258039 3-2
258040 2-8
258043 . . . . . 2-2, 3-2
258046 2-12
258047 2-12
258050 2-8
258051 2-8
258054 2-8
258056 2-8
258057 2-8
258061 2-8
258064 2-8
258065 2-8
258066 2-8
258067 2-8
258068 2-8
258069 2-8
258070 2-4
258071 2-4
258073 7-3
258074 2-12
258075 2-5
258076 7-3
258090 3-4
258091 3-4
258099 2-14
258100 2-14
258304 1-2
258305 1-2
258306 1-2
258307 . . . . . 1-2, 1-4
258310 1-4
258313 1-4
258314 1-4
258315 1-4
258316 1-4
258317 6-3
258318 6-3
258319 1-2
258322 3-4
258326 1-2
258327 1-2
258328 1-2
258329 1-2
258332 4-2

258335 1-2
258336 1-4
258339 3-2
258363 6-3
258367 1-2
258368 1-4
258465 1-2
258469 1-2
258472 1-2
258475 . . . . . 1-4, 4-2
258477 2-14
258478 2-14
258480 3-2
258482 2-8
258511 2-12
258512 2-12
258540 2-8
258572 2-10
258573 2-10
258595 . . . . . 2-2, 3-4
259933 4-2
259941 3-4
259943 3-4
259946 3-4
259963 3-4
259964 3-4
259966 3-4
260471 7-3
260557 4-2
3/4-10X2-1/2CB 2-16
3-630-010004 1-2
3D478 2-4
40K2 2-4
528933 . . . . . 6-3, 7-3
528934 . . . . . 6-3, 7-3
528938 . . . . . 6-3, 7-3
622-3511-008 2-8
70260977 . . . . . 3-2, 7-3

W

W908409-4 . . . . . 2-4, 2-12

Instructions for Ordering Parts

**** Repair parts must be ordered through an Authorized Dealer ****

DEALER INSTRUCTIONS FOR ORDERING PARTS FROM LANDOLL PARTS DISTRIBUTION CENTER

Phone #: 800-423-4320 or 785-562-5381 **Fax #: 888-527-3909**
Order online: dealer.landoll.com

SERIAL NUMBER PLATE

The Serial Number Plate, which lists the model number and serial number, is located on the front of the hitch *See Figure 1-1*

SERIAL NUMBER NOMENCLATURE

The following information will help decode the 2700 Vertistrip serial number

27H2600100 = xxmyyssssss

The 2700 Vertistrip series QR code decal, may be scanned to link to the most current manuals, located on the front of the frame *See Figure 1-1*.

xx	= model series (i.e. 27 for Vertistrip)
m	= month of manufacture (ex. “H” means October. The letter I is not used.)
yy	= year manufactured (ex. “26” means 2026)
sssss	= Sequential number used to track warranty and service information.

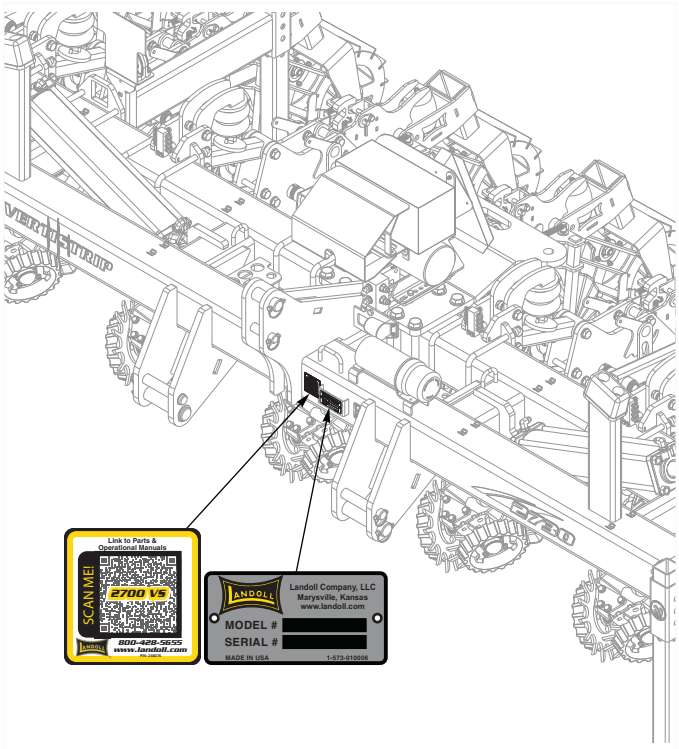

Figure 1-1: Serial Number Plate and QR Code Decal Location

Manuals for 2700 Vertistrip

Manual Number	Manual Type
F-1201	Operator’s Manual
F-1202	Parts Manual

Document Control Revision Log:

Date	Form #	Improvement(s): Description and Comments
05/02/2026	F-1202	New Manual
10/30/2026	F-1202-2610	Initial Release

Equipment from Landoll Company, LLC is built to exacting standards ensured by ISO 9001:2015 registration at all Landoll manufacturing facilities.

Model 2700

Vertistrip

Parts Manual

Re-Order Part Number F-1202

LANDOLL COMPANY, LLC

1900 North Street

Marysville, Kansas 66508

(785) 562-5381

800-428-5655 ~ WWW.LANDOLL.COM

Copyright 2026. Landoll Company, LLC

"All rights reserved, including the right to reproduce this material or portions thereof in any form."