Model 4630-36
Folding Seeder
Parts Manual

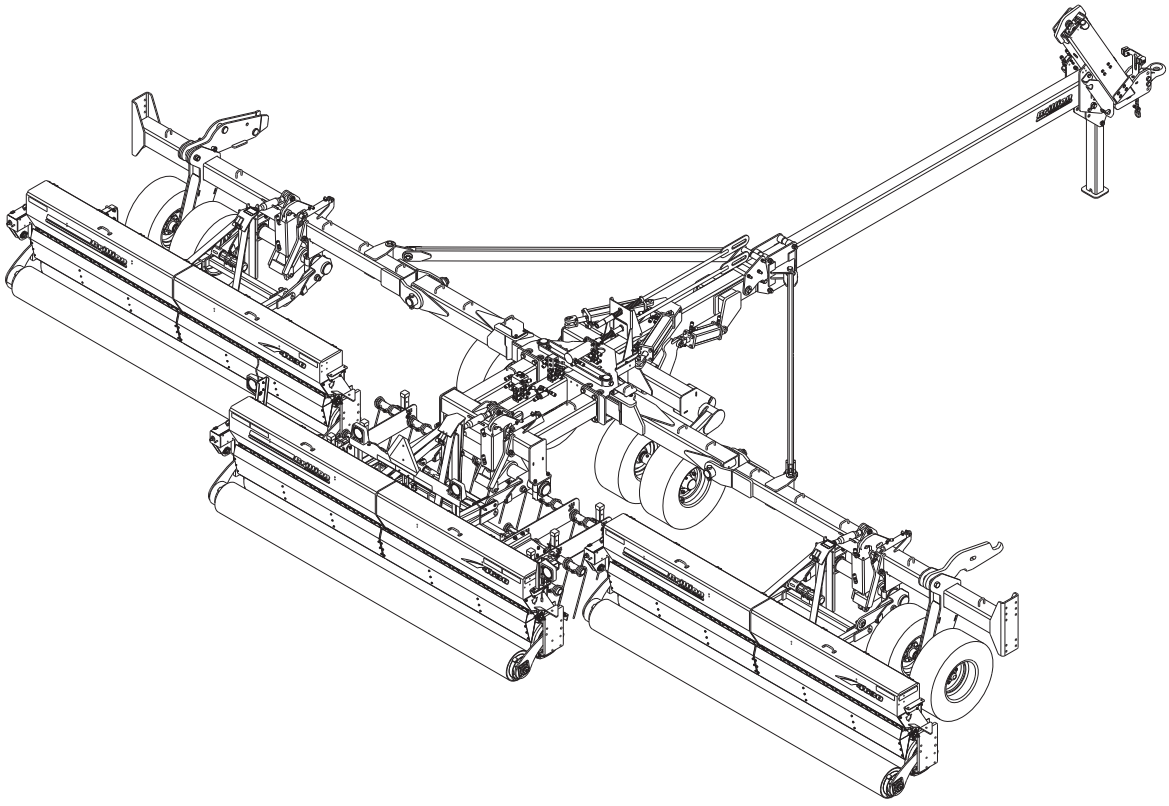

LANDOLL COMPANY, LLC
1900 North Street
Marysville, Kansas 66508
(785) 562-5381
800-428-5655 ~ WWW.LANDOLL.COM

Manuals for 4630-36 Folding Seeder

Manual Number	Manual Type
F-640	Operator's Manual
F-641	Parts Manual

Table of Contents

1 Illustrated Parts List

Instructions for Ordering Parts 1-1
Main Hitch Frame Assembly - Front 1-2
Main Hitch Frame Assembly - Rear 1-4
Transport Lock (After S/N ASK1300944) 1-6
Transport Lock (Before S/N ASK1300944) 1-7
Hub and Spindle Assembly, 8 Bolt 1-8
Tire and Wheel Assembly, 8 Bolt 1-9
Hitch Slide, Wings, Brace Assembly 1-10
Rear Seeder Mount, Inner Wings, Brace Assembly 1-12
Wing Assembly 1-14
Hub and 2" Spindle Assembly, 6 Bolt 1-16
Tire and Wheel Assembly, 6 Bolt 1-17
3-PT Lift Assembly 1-18
Center Coil Tine Harrow Assembly 1-20
Wing Harrow Track Remover Assembly 1-22
Row Marker Assembly - Optional 1-24
Row Marker Hydraulics - Optional 1-28
Seeder Assembly Options 1-31
Center Walk Board 1-32
Left Hand Walk Board (Used on High Capacity Seeders Only) 1-34
Right Hand Walk Board (Used on High Capacity Seeders Only) 1-36
Lighting Assemblies 1-38
Brillion Elite Mini Monitor - Single Seed Box Electrical Schematic 1-40
Brillion Elite Mini Monitor - Double Seed Box Electrical Schematic 1-42
Brillion Elite Mini Monitor - Ground Speed 1-44
Brillion Elite Mini Monitor - SSBP12 Front Seed Box Seed Shaft Sensor . . . 1-45
Brillion Elite Mini Monitor - SSBP12 Rear Seed Box Seed Shaft Sensor . . . 1-46
Brillion Elite Mini Monitor - SSBP12 Front Seed Box Bin Level Sensor 1-47
Brillion Elite Mini Monitor - SSP112 Seed Shaft Sensor 1-48
Brillion Elite Mini Monitor - SSP112 Bin Level Sensor 1-49
Brillion Elite Mini Monitor - SLP2121, SLP3121, SLPB2121
Front Seed Box Seed Shaft Sensor 1-50
Brillion Elite Mini Monitor - SLBP2121 Rear Seed Box Seed Shaft Sensor . . 1-51
Brillion Elite Mini Monitor - SLP2121, SLBP2121
Front Seed Box Bin Level Sensor 1-52
Brillion Elite Mini Monitor - SLP3121 Front Seed Box Bin Level Sensor 1-53
Brillion Elite Mini Monitor - SSP2121 Seed Shaft Sensor 1-54
Brillion Elite Mini Monitor - SSP2121 Bin Level Sensor 1-55
Brillion Elite Mini Monitor Tractor Mount 1-56

Console w/Clutch Control - Single Seed Box Electrical Schematic 1-58
Console w/Clutch Control - Double Seed Box Electrical Schematic 1-60
Console w/Clutch Control - SSBP12 Front Seed Box Seed Shaft Sensor . . 1-62
Console w/Clutch Control - SSBP12 Rear Seed Box Seed Shaft Sensor . . . 1-63
Console w/Clutch Control - SSP112 Seed Shaft Sensor 1-64
Console w/Clutch Control - SLP2121, SLP3121 and SLBP2121
Front Seed Box Seed Shaft Sensor 1-65
Console w/Clutch Control - SLBP2121 Rear Seed Box Seed Shaft Sensor . 1-66
Console w/Clutch Control - SSP2121 Seed Shaft Sensor 1-67
Console w/Clutch Control Tractor Mount 1-68
Weather Pack Connectors 1-70
AMP Connectors 1-71
Hydraulic Cylinder and Manifold Installation 1-72
Hitch Lift Hydraulic Assembly (After S/N ASK1300944) 1-76
Hitch Lift Hydraulic Assembly (Before S/N ASK1300944) 1-78
Wing Fold Hydraulic Assembly (After S/N ASB1602020) 1-80
Wing Fold Hydraulic Assembly (After S/N ASK1300944) 1-82
Wing Fold Hydraulic Assembly (Before S/N ASK1300944) 1-84
Manifold Pressure Reduction Assembly 1-86
3-PT Lift Hydraulic Assembly 1-88
Hydraulic Cylinder, 4 x 24 - Prince 1-90
Hydraulic Cylinder, 4 x 20 - Prince 1-91
Hydraulic Cylinder, 4 x 10 - Prince 1-92
Hydraulic Cylinder, 4 x 8 - Prince 1-93
Hydraulic Cylinder, 3-1/2 x 6 - Prince 1-94
Hydraulic Cylinder, 2-1/2 x 20 - Carlson 1-95
Hydraulic Cylinder, 2-1/2 x 20 - Prince 1-96
Hydraulic Cylinder, 1-3/4 x 6 - Prince 1-97
Decals 1-98
Decal Placement 1-100

2 Glossary

3 Index

Illustrated Parts List

Instructions for Ordering Parts

**** Repair parts must be ordered through an authorized dealer ****

**BEFORE CALLING YOUR DEALER,
HAVE THE SERIAL NUMBER AND MODEL OF YOUR HITCH AND/OR INDIVIDUAL SEEDER.**

DEALER INSTRUCTIONS FOR ORDERING PARTS FROM LANDOLL PARTS DISTRIBUTION CENTER

PHONE: 800-423-4320 OR 785-562-538 **FAX:** 888-527-3909

ORDER ONLINE: Dealer.landoll.com

DATA PLATE

See Figure 1-1 for the Data Plate, which lists the model and serial number of the equipment. The 4630-36 Folding Seeder includes 4 Data Plates, (1) 4630-36 Data Plate on the left side of the Hitch, and (3) Seeder Data Plates, located on the front, right hand side of each seeder.

SERIAL NUMBER NOMENCLATURE

The Seeder Data Plates will list Model Number of the individual Seeders and the same serial number as the Hitch followed by a "L", "C", or "R" to indicate position on the machine (Left, Center or Right). The following information will help decode the Landoll serial number.

ASD2400100 = xxmyyssssss

xx	= model series (i.e. “AS” for all Agriculture Seeder)
m	= month of manufacture (ex. “D” means April. The letter I is not used.)
yy	= last digits of the year manufactured (ex. “24” means 2024)
sssss	= Sequential number used to track warranty and service information.

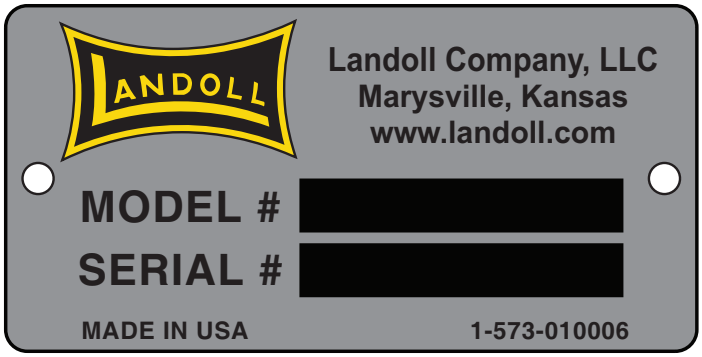

Figure 1-1: Data Plate

Main Hitch Frame Assembly - Front

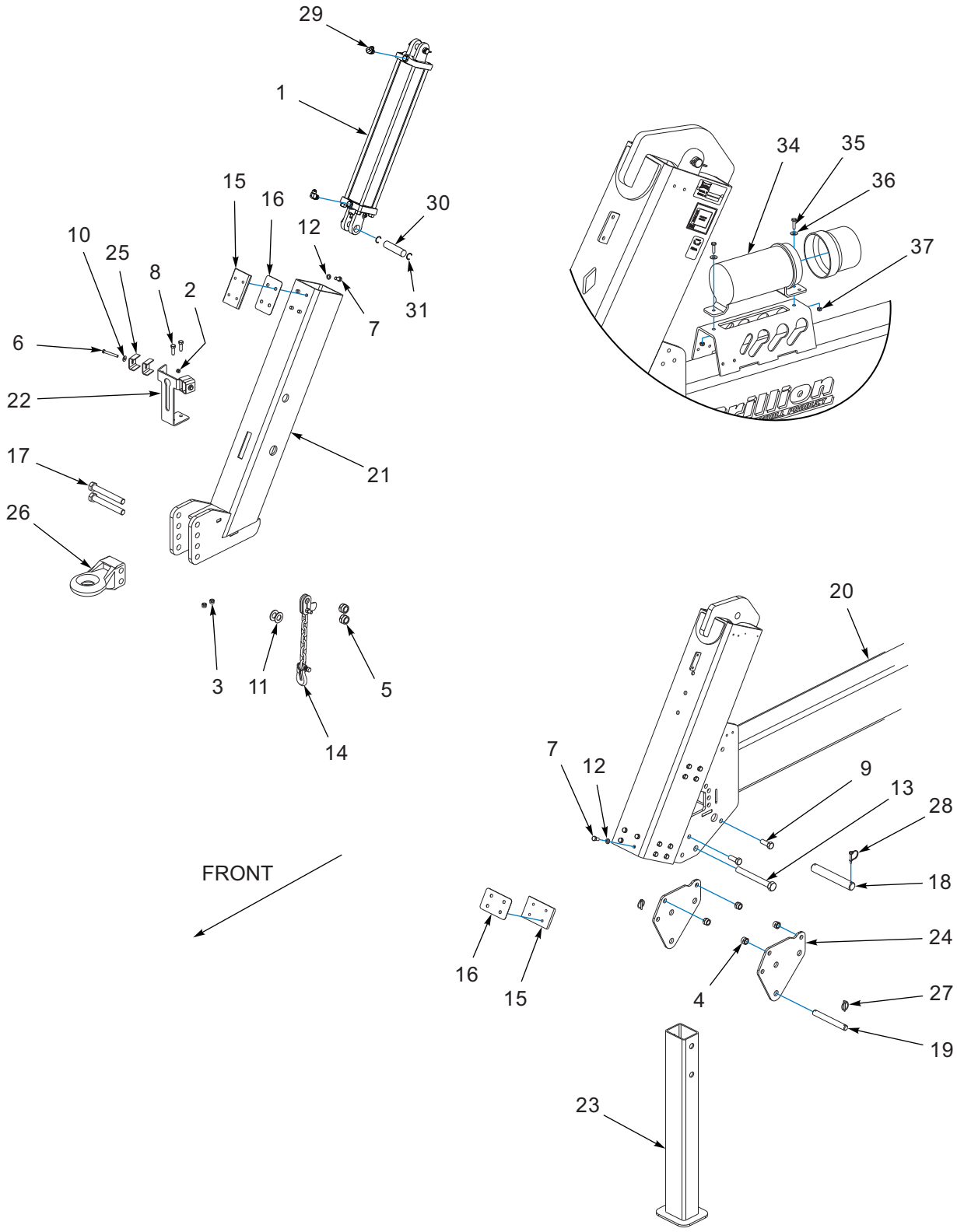

Figure 1-2: Main Hitch Frame Assembly - Front

Main Hitch Frame Assembly - Front

ITEM	PART NUMBER	DESCRIPTION	QTY
1	1-242-010172-3	CYLINDER, HYDRAULIC 4 X 24 **(SEE PAGE 1-90)**	1
2	1-512-010005-05	NUT, HEX LOCK 3/8-16, GRB	2
3	1-512-010005-09	NUT, HEX LOCK 1/2-13, GRB	2
4	1-512-010005-15	NUT, HEX LOCK 3/4-10, GRB	4
5	1-512-010005-19	NUT, HEX LOCK 1-8, GRB	2
6	1-654-010051-13	SCREW, HEX HEAD CAP 3/8 -16 X 3, GR5	2
7	1-654-010055-01	SCREW, HEX HEAD CAP 1/2 -13 X 1, GR5	32
8	1-654-010055-03	SCREW, HEX HEAD CAP 1/2 -13 X 1-1/2, GR5	2
9	1-654-010061-05	SCREW, HEX HEAD CAP 3/4 -10 X 2, GR5	4
10	1-861-010032-11	WASHER, FLAT 3/8 W	2
11	1-861-010032-24	WASHER, FLAT 1" N	2
12	1-861-010034-13	WASHER, SPLIT LOCK 1/2	32
13	114616	SCREW, HEX HEAD CAP 1-8 X 8-1/2, GR5	1
14	141434	SAFETY CHAIN, 21,000 LB	1
14	161536	HOOK, SAFETY CHAIN 21,000 LB	1
15	143916	PLATE, SLIDE	8
16	151533	SHIM, HITCH SLIDE	8
17	153696	BOLT, HITCH CLEVIS 1-8 X 7-1/2	2
18	153859	PIN, 1-1/2 X 10	1
19	144355	PIN, 1 X 8	1
20	167272	HITCH, SEEDER 36'	1
21	167321	TUBE, TELESCOPING HITCH	1
22	167322	BRACKET, HOSE HOLDER	1
23	167323	JACKSTAND WELDMENT	1
24	167324	BRACKET, JACK STAND	1
25	2-181-010001	HOSE CLAMP	4
26	2-375-010602	HITCH RING, CAT IV	1
27	70239854	PIN, QUICK HITCH	2
28	70592442	PIN, SNAPPER	2
29	2062-8-8S	ADAPTER, 90	2
30	154853	PIN, 1 X 4	1
31	1-630-010021-03	RING, RETAINING 1.0 HD	2
32	1-397-010369054	HOSE ASSEMBLY, 3/8 X 54 **(SEE PAGE 1-76) (NOT SHOWN)**	1
33	71508988	HOSE ASSEMBLY, 3/8 X 80 **(SEE PAGE 1-76) (NOT SHOWN)**	1
34	150076	MANUAL TUBE (4-1/4"ID)	1
35	1-654-010047-06	SCREW,HX CP 1/4-20UNCX1 GR5	2
36	1-861-010032-07	WASHER,FLAT 1/4 ZP	2
37	1-512-010005-01	NUT,HEX,SLFLKG GRB 1/4-20	2

Main Hitch Frame Assembly - Rear

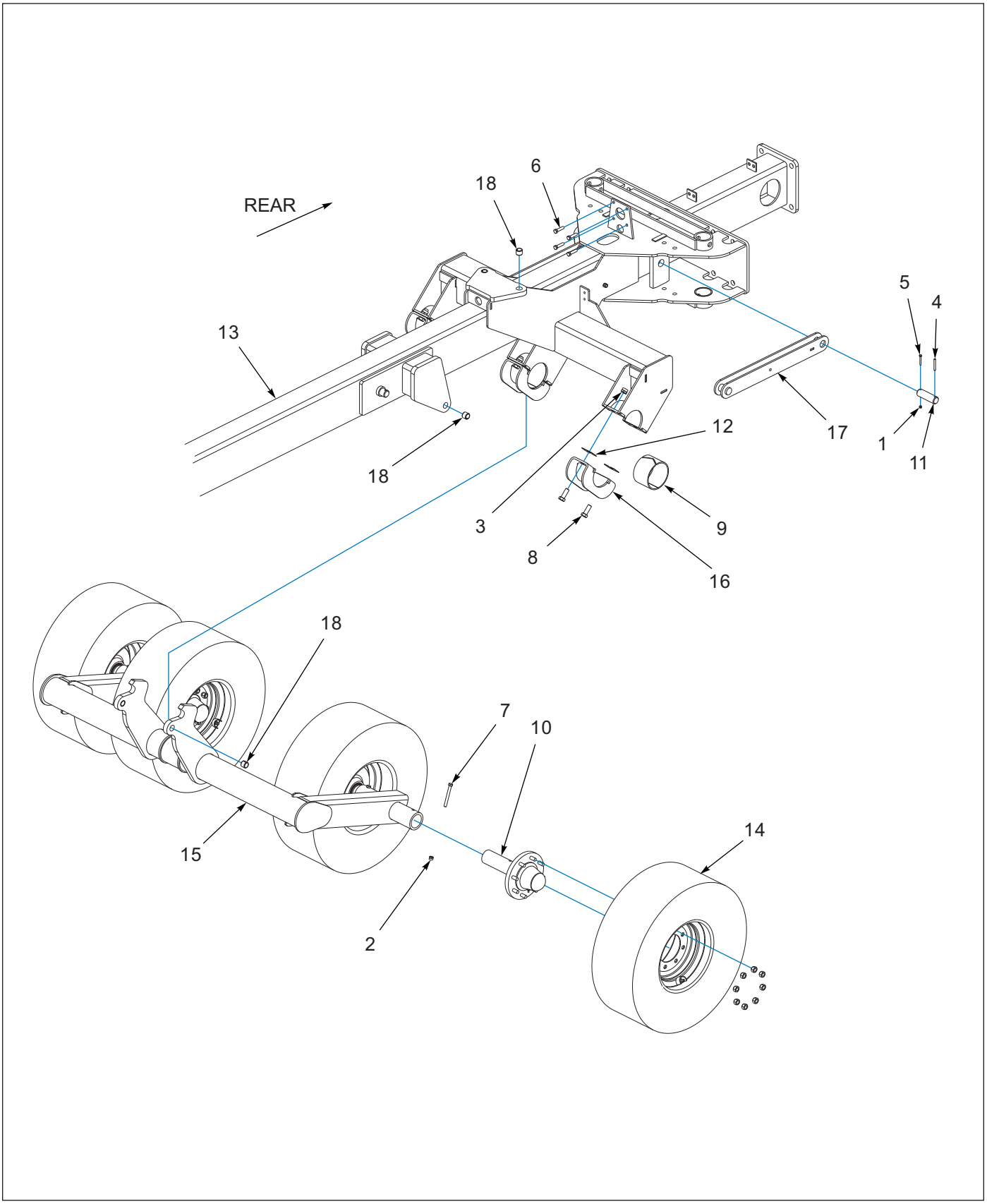

Figure 1-3: Main Hitch Frame Assembly - Rear

Main Hitch Frame Assembly - Rear

ITEM	PART NUMBER	DESCRIPTION	QTY
1	1-512-010005-01	NUT, HEX LOCK 1/4-20, GRB	2
2	1-512-010005-09	NUT, HEX LOCK 1/2-13, GRB	4
3	1-512-010005-15	NUT, HEX LOCK 3/4-10, GRB	6
4	1-647-010004240	PIN, SPRING SLOTTED 5/16 X 2-1/2	2
5	1-654-010047-10	SCREW, HEX HEAD CAP 1/4-20 X 2, GR5	2
6	1-654-010055-05	SCREW, HEX HEAD CAP 1/2-13 X 2, GR5	4
7	1-654-010055-14	SCREW, HEX HEAD CAP 1/2-13 X 4-1/2, GR5	4
8	1-654-010061-05	SCREW, HEX HEAD CAP 3/4-10 X 2, GR5	6
9	140519	BEARING, UHMW 4"	3
10	144003	HUB AND SPINDLE ASSEMBLY, 8 BOLT **(SEE PAGE 1-8)**	4
11	144356	PIN, 1-1/2 X 4-5/8	2
12	153827	SHIM, LIFT BEARING	6
13	167272	HITCH, SEEDER 36'	1
14	167299	TIRE AND WHEEL ASSY 12.5 X 15 FI **(SEE PAGE 1-9)**	4
15	167311	LIFT WELDMENT, CENTER	1
16	167314	CAP BEARING WELDMENT, LIFT	3
17	167315	LINK WELDMENT, TRANSPORT LOCK	2
18	2-150-010008	BUSHING, STEEL	6

Transport Lock (After S/N ASK1300944)

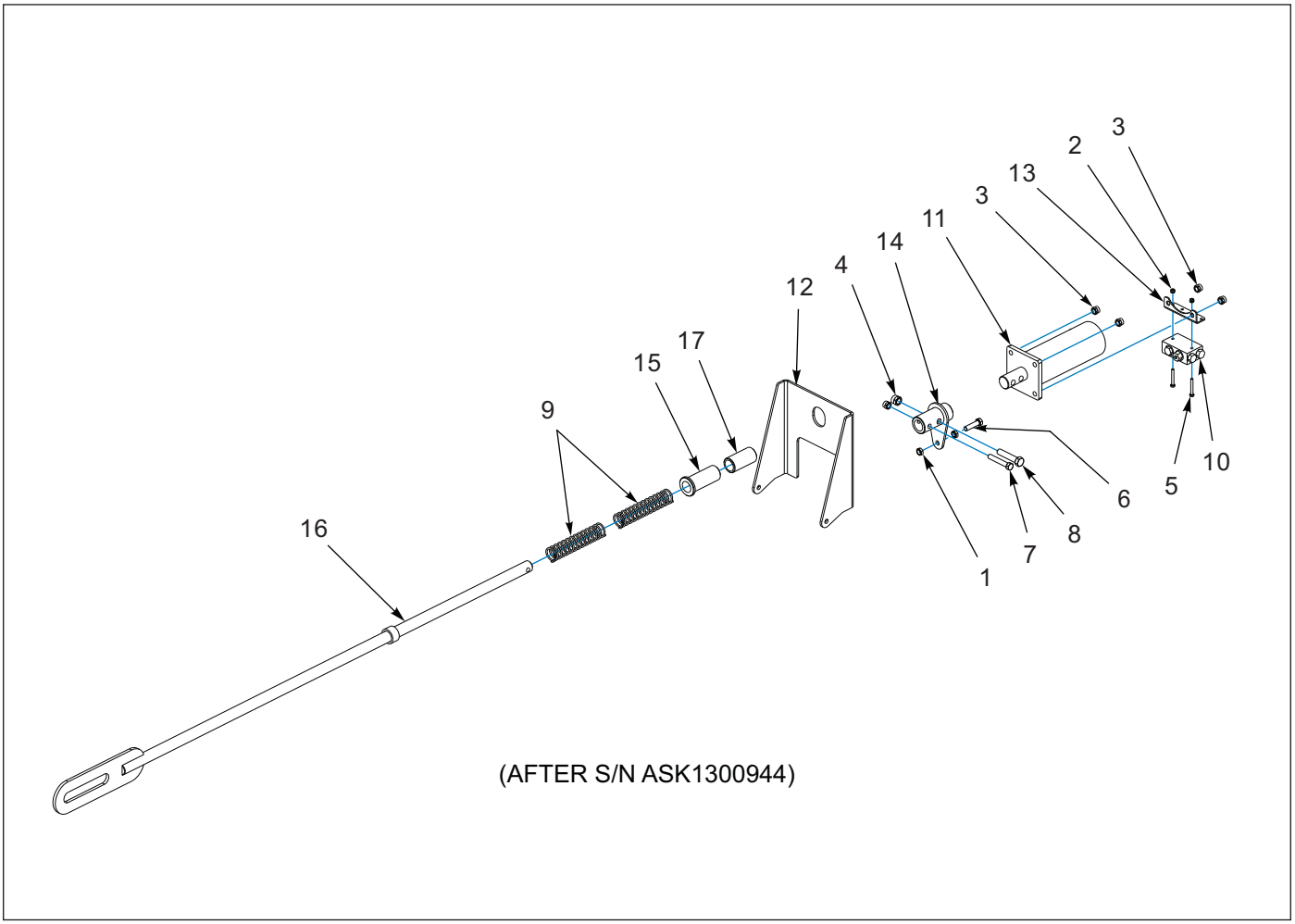

Figure 1-4: Transport Lock (After S/N ASK1300944)

Transport Lock (After S/N ASK1300944)

ITEM	PART NUMBER	DESCRIPTION	QTY
1	1-511-010001-05	NUT, HEX JAM 1/2-13	4
2	1-512-010005-01	NUT, HEX LOCK 1/4-20, GRB	2
3	1-512-010005-09	NUT, HEX LOCK 1/2-13, GRB	4
4	1-512-010005-13	NUT, HEX LOCK 5/8-11, GRB	1
5	1-654-010047-10	SCREW, HEX HEAD CAP 1/4-20 X 2, GR5	2
6	1-654-010055-05	SCREW, HEX HEAD CAP 1/2-13 X 2, GR5	1
7	1-654-010055-09	SCREW, HEX HEAD CAP 1/2-13 X 3, GR5	1
8	1-654-010059-09	SCREW, HEX HEAD CAP 5/8-11 X 3, GR5	1
9	144113	SPRING, COMPRESSION 8"	2
10	144138	VALVE, STOP	1
11	167310	CYLINDER, HYDRAULIC 3-1/2 X 6 **(SEE PAGE 1-94)**	1
12	167317	BRACKET, TRANSPORT LOCK	1
13	167318	MOUNT, RELEASE VALVE	1
14	167319	SLEEVE, TRANSPORT LOCK	1
15	167320	SLEEVE, TRANSPORT LOCK	1
16	179511	ROD, TRANSPORT LOCK WELDMENT	1
17	179512	BUSHING, 1.76OD X 1.312 ID X 3.5 LONG	1

Transport Lock (Before S/N ASK1300944)

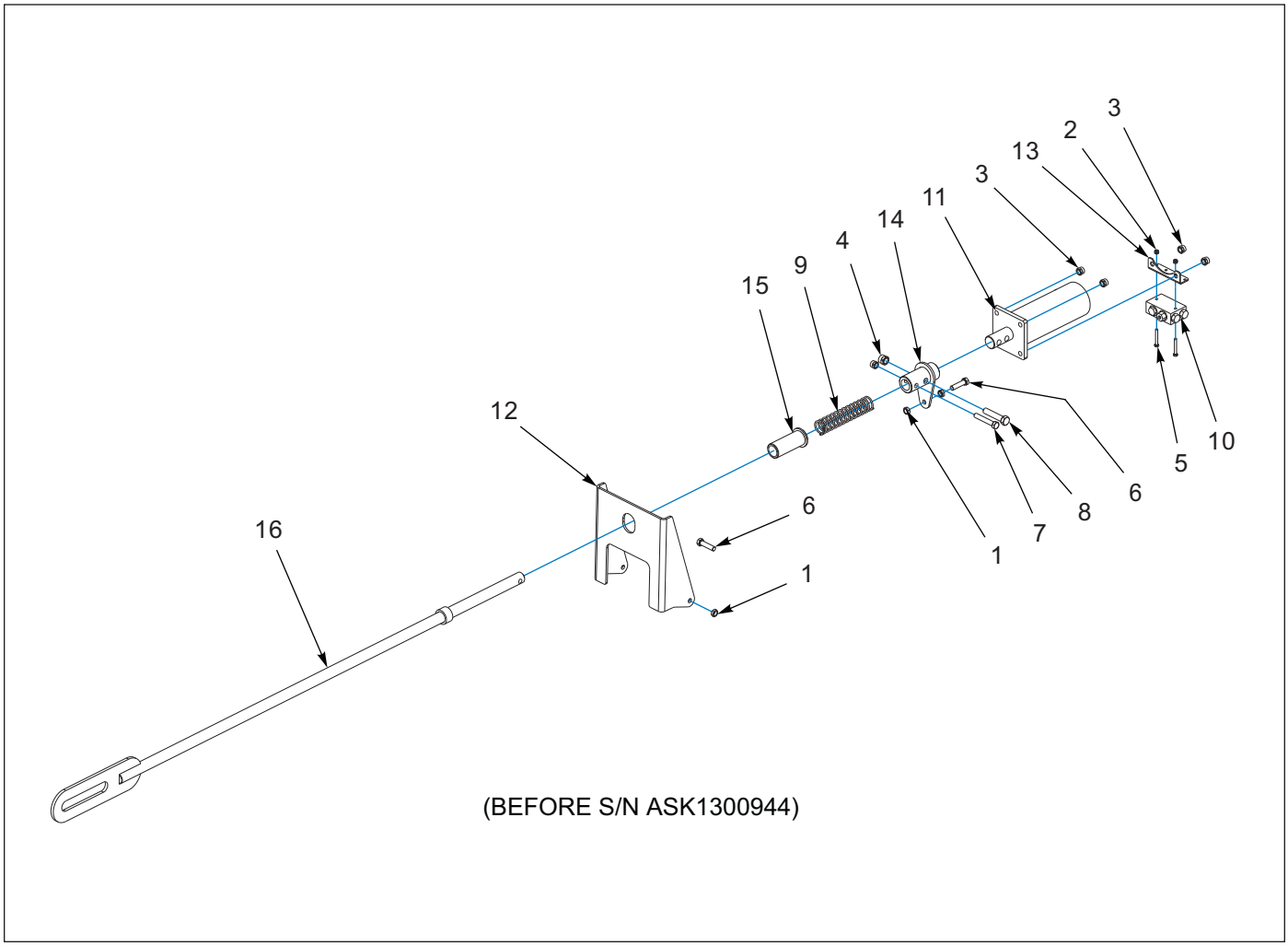

Figure 1-5: Transport Lock (Before S/N ASK1300944)

Transport Lock (Before S/N ASK1300944)

ITEM	PART NUMBER	DESCRIPTION	QTY
1	1-511-010001-05	NUT, HEX JAM 1/2-13	4
2	1-512-010005-01	NUT, HEX LOCK 1/4-20, GRB	2
3	1-512-010005-09	NUT, HEX LOCK 1/2-13, GRB	4
4	1-512-010005-13	NUT, HEX LOCK 5/8-11, GRB	1
5	1-654-010047-10	SCREW, HEX HEAD CAP 1/4-20 X 2, GR5	2
6	1-654-010055-05	SCREW, HEX HEAD CAP 1/2-13 X 2, GR5	2
7	1-654-010055-09	SCREW, HEX HEAD CAP 1/2-13 X 3, GR5	1
8	1-654-010059-09	SCREW, HEX HEAD CAP 5/8-11 X 3, GR5	1
9	144113	SPRING, COMPRESSION 8"	2
10	144138	VALVE, STOP	1
11	167310	CYLINDER, HYDRAULIC 3-1/2 X 6 **(SEE PAGE 1-94)**	1
12	167317	BRACKET, TRANSPORT LOCK	1
13	167318	MOUNT, RELEASE VALVE	1
14	167319	SLEEVE, TRANSPORT LOCK	1
15	167320	SLEEVE, TRANSPORT LOCK	1
16	167316	ROD, TRANSPORT LOCK WELDMENT	1

Hub and Spindle Assembly, 8 Bolt

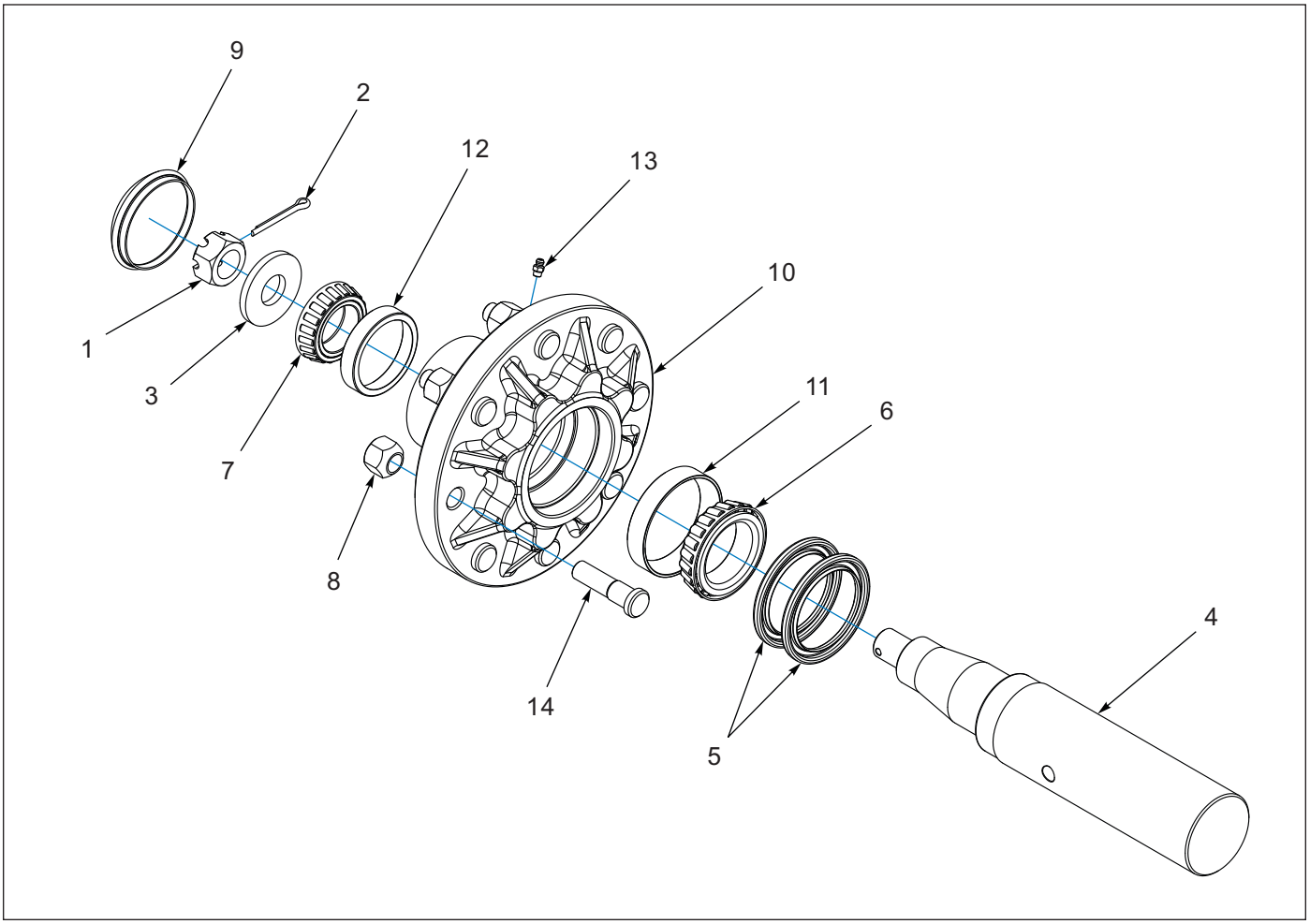

Figure 1-6: Hub and Spindle Assembly, 8 Bolt

Hub and Spindle Assembly, 8 Bolt

ITEM	PART NUMBER	DESCRIPTION	QTY
	144003	HUB AND SPINDLE ASSEMBLY, 8 BOLT	4
1	1-516-010001-20	NUT, HEX SLOT 1-14	4
2	1-557-010362-51	PIN, COTTER 3/6 X1-1/2 **(AFTER 06/2016)**	4
2	1-557-010362-40	PIN, COTTER 5/32 X 1-1/4	4
3	1-861-010005	WASHER, SPINDLE 1"	4
4	144002	SPINDLE, 2-7/8 X 15	4
5	102499	SEAL,8-BOLT HUB 2.750 I.D.	1
6	102497	BEARING CONE,INNER 2.1654	1
7	102498	BEARING CONE,OUTER, 1.625	1
8	102600	NUT,WHEEL BOLT, 5/8	8
9	102601	HUB CAP, 8-BOLT HUB	1
10	102602	HUB & CUP ASSY,8-BOLT **(INCLUDES ITEMS 11-14)**	1
11	102603	BEARING CUP, INNER	1
12	102604	REARING CUP, OUTER	1
13	1-298-010001-1	ZERK FITTING 1/2 SAE	1
14	4001060	WHEEL STUD, 5/8-18UNF X 2-1/2	8
15	2-406-010073	HUB ASSY, 8 BOLT 6000 LB **(KIT INCLUDES ITEMS 5-14)**	4

Tire and Wheel Assembly, 8 Bolt

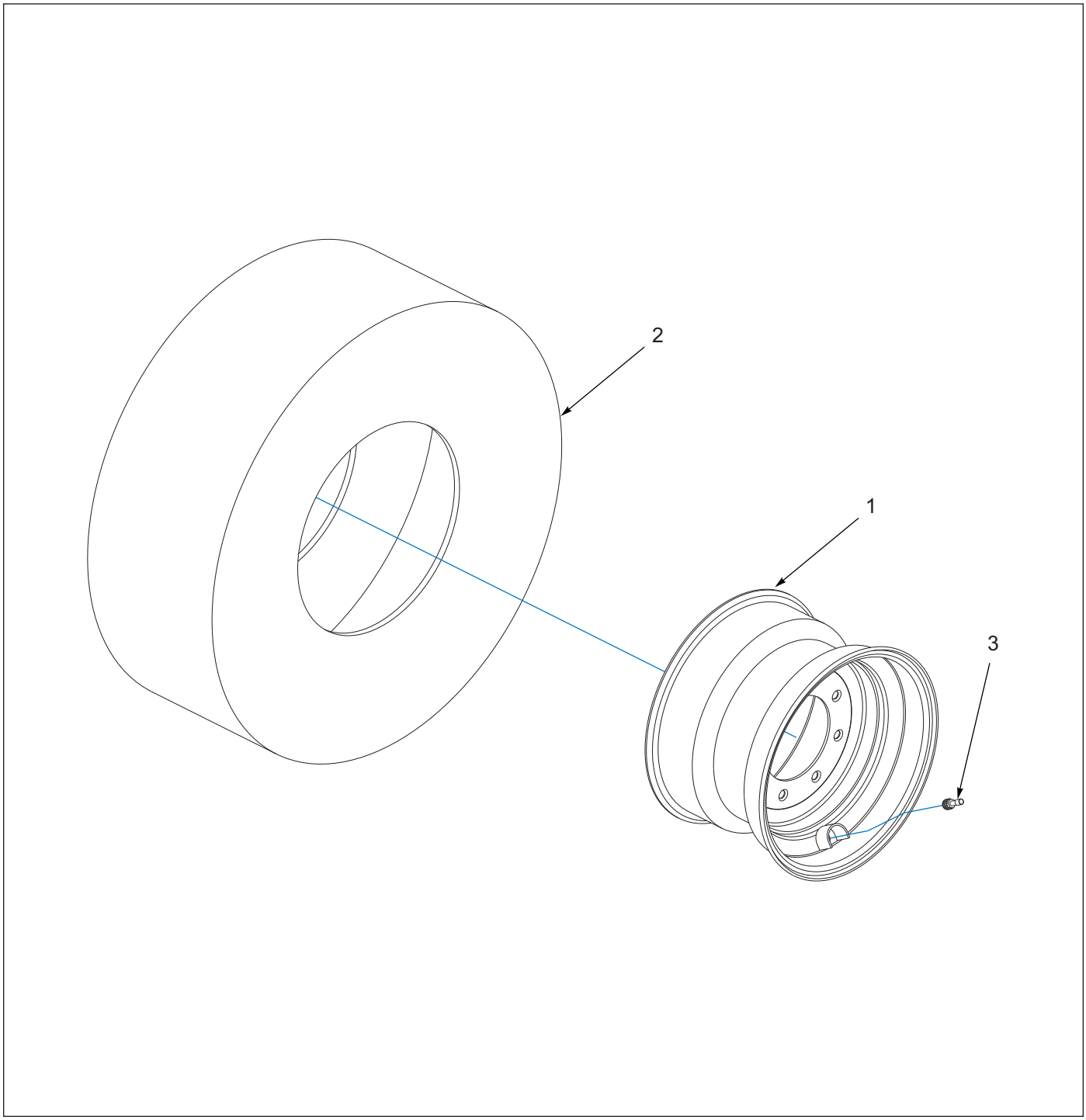

Figure 1-7: Tire and Wheel Assembly, 8 Bolt

Tire and Wheel Assembly, 8 Bolt

ITEM	PART NUMBER	DESCRIPTION	QTY
	167299	TIRE AND WHEEL ASSY 12.5 X 15 FI	1
1	167298	WHEEL, 15 X 10 LB 8 BOLT 3/8	1
2	2-798-010106	TIRE, 12.5L X 15	1
3	TR416	VALVE STEM, TUBELESS TIRE	1

Hitch Slide, Wings, Brace Assembly

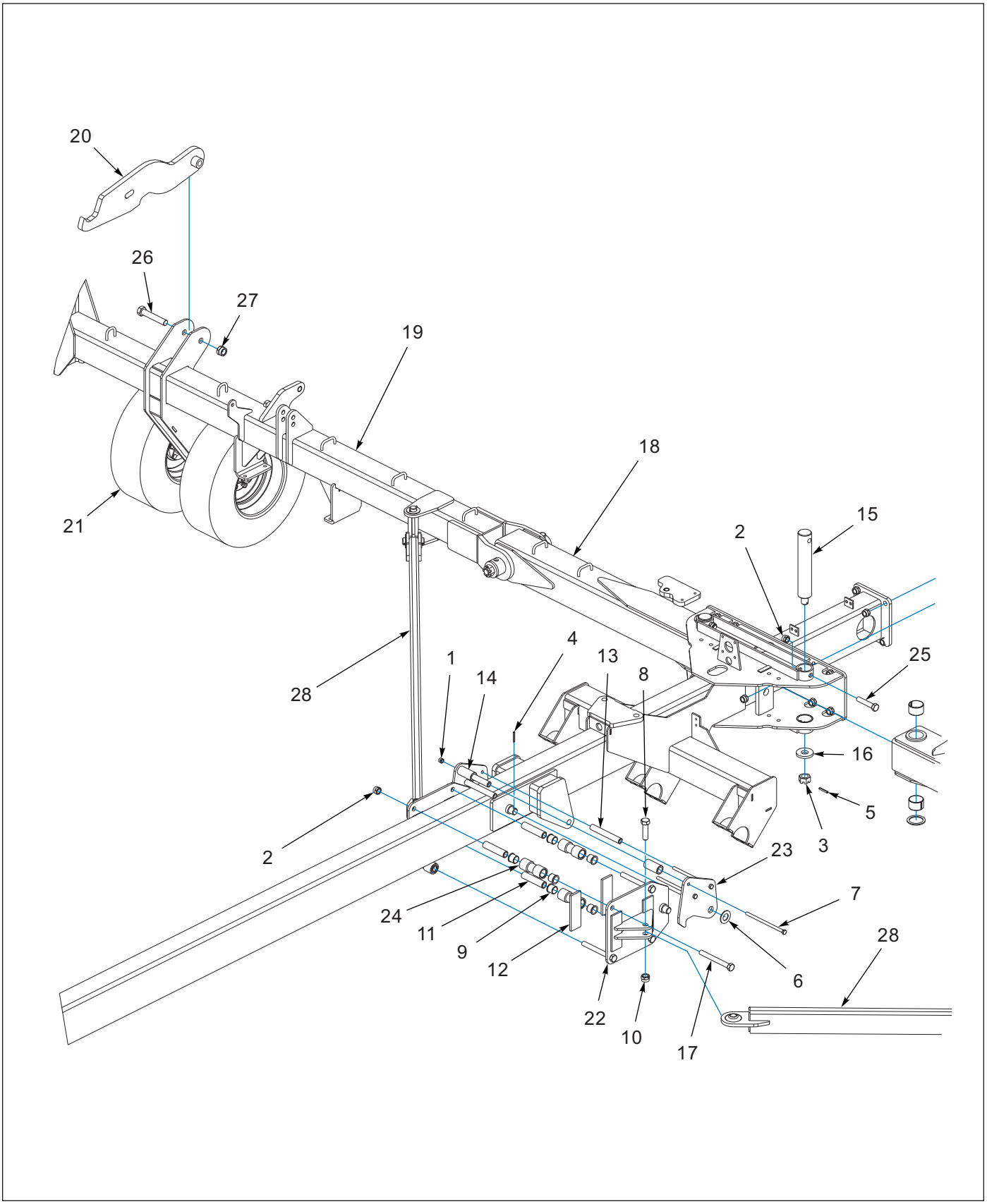

Figure 1-8: Hitch Slide, Wings, Brace Assembly

Hitch Slide, Wings, Brace Assembly

ITEM	PART NUMBER	DESCRIPTION	QTY
1	1-512-010005-13	NUT, HEX LOCK 5/8-11, GRB	3
2	1-512-010005-19	NUT, HEX LOCK 1-8, GRB	20
3	1-516-010001-27	NUT, HEX SLOT 1-1/2-6	4
4	1-647-010004240	PIN, SPRING SLOTTED 5/16 X 2-1/2	10
5	1-647-010004257	PIN, SPRING SLOTTED 3/8 X 2-1/2	4
6	1-861-010032-32	WASHER, FLAT 1-1/2	10
7	107-0023	SCREW, HEX HEAD CAP 5/8-11 X 11, GR5	3
8	13519	SCREW, HEX HEAD CAP 1-1/8-7 X 4, GR5	2
9	140599	BEARING, FLANGE 1-1/2	8
10	141254	NUT, HEX SELF LOCKING 1-1/8-7	2
11	144010	BUSHING, SLIDE CLAMP	4
12	144012	PAD, HITCH SLIDE	4
13	144057	BUSHING, TRANSPORT CLAMP	3
14	192971	BUSHING, TRANSPORT LOCK	2
15	144371	PIN, 1-1/2 X 18	2
16	179533	WASHER, 3.063X4.0X.135	4
17	154888	SCREW, HEX HEAD CAP 1-8 X 9, GR5	4
18	166504	WING, INNER RH TSH	1
18	166503	WING, INNER LH TSH **(NOT SHOWN)**	1
19	167282	WING, FOLDING SEEDER, RH	1
19	167281	WING, FOLDING SEEDER, LH **(NOT SHOWN)**	1
20	167288	HOOK, WING LOCK	1
21	167297	TIRE AND WHEEL ASM, 280/70R15 **(SEE PAGE 1-17)**	4
22	167312	SLIDE WELDMENT, HITCH	2
23	167313	LATCH, WING BRACE	2
24	167326	ROLLER, SLIDE CLAMP	4
25	1-654-010065-15	SCREW HX CP 1-8UNCX5 GR5	2
26	100545	SCREW,CAP 1-1/4-7X7 GR5	2
27	101385	NUT,HEX SLFLKG,1-1/4-7 GRB	2
28	166506	BRACE WING TSH	2

Rear Seeder Mount, Inner Wings, Brace Assembly

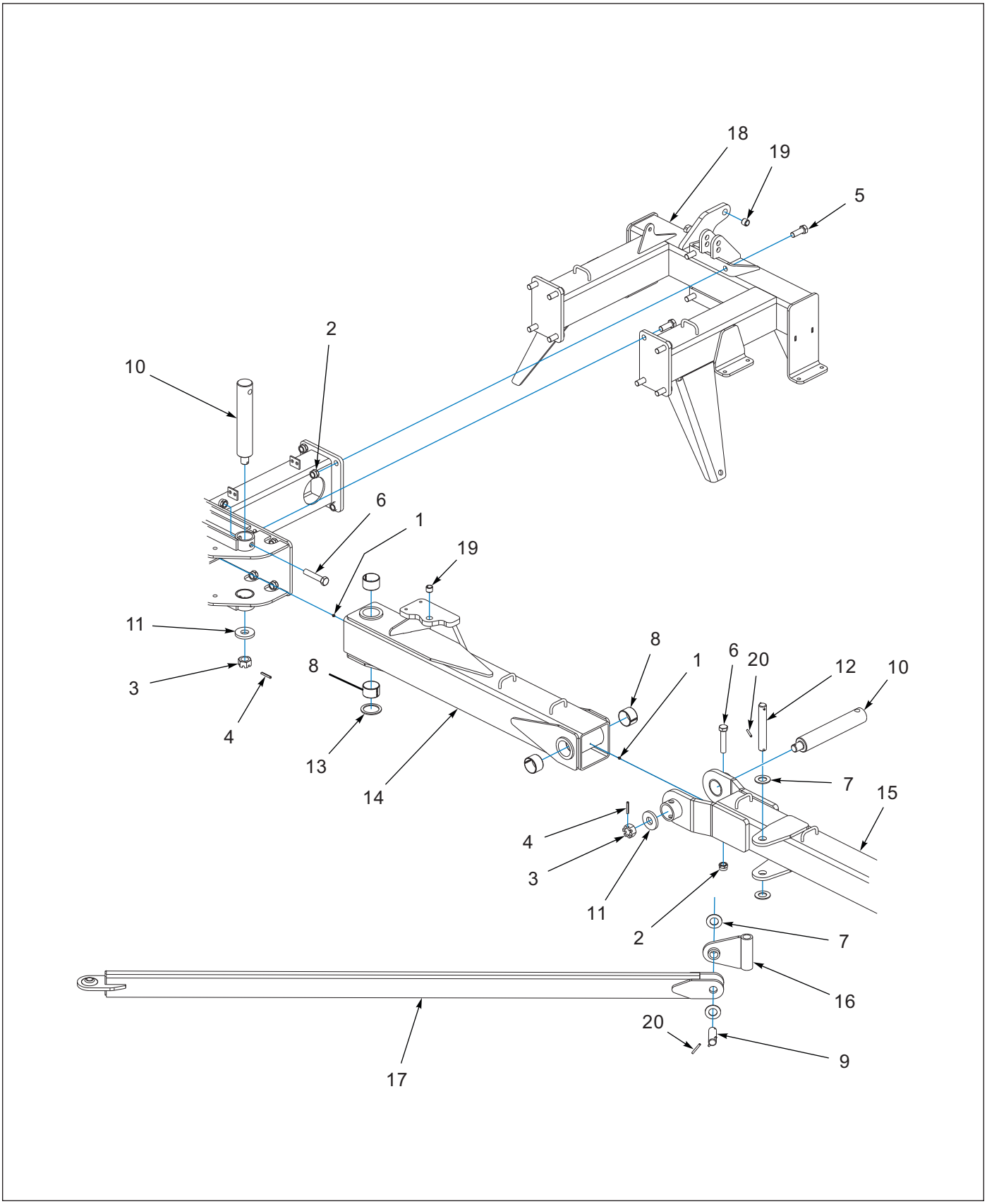

Figure 1-9: Rear Seeder Mount, Inner Wings, Brace Assembly

Rear Seeder Mount, Inner Wings, Brace Assembly

ITEM	PART NUMBER	DESCRIPTION	QTY
1	1-298-010001-1	ZERK, FITTING 1/4	4
2	1-512-010005-19	NUT, HEX LOCK 1-8, GRB	20
3	1-516-010001-27	NUT, HEX SLOT 1-1/2-6	4
4	1-647-010004257	PIN, SPRING SLOTTED 3/8 X 2-1/2	4
5	1-654-010065-08	SCREW, HEX HEAD CAP 1-8 X 2-3/4, GR5	12
6	1-654-010065-15	SCREW, HEX HEAD CAP 1-8 X 5, GR5	4
7	1-861-010032-32	WASHER, FLAT 1-1/2	10
8	144341	BUSHING, SPRING 3-1/4 X 3 X 2	8
9	144356	PIN, 1-1/2 X 4-5/8	2
10	144371	PIN, 1-1/2 X 18	2
11	179533	WASHER, 3.063X4.0X.135	4
12	153859	PIN, 1-1/2 X 10	2
13	179534	WASHER, 3-3/4 X 1-9/16 X 1/2	2
14	166503	WING, INNER LH TSH	1
14	166504	WING, INNER RH TSH **(NOT SHOWN)**	1
15	167281	WING, FOLDING SEEDER, LH	1
15	167282	WING, FOLDING SEEDER, RH **(NOT SHOWN)**	1
16	166505	MOUNT WELDMENT, WING BRACE	2
17	166506	BRACE, WING TSH	2
18	166533	MOUNT, REAR SEEDER	1
19	2-150-010008	BUSHING, STEEL 1-1/4 X 1 X 1	5
20	1-647-010004240	PIN,SPRING,SLOTTED,5/16X2-1/2	4

Wing Assembly

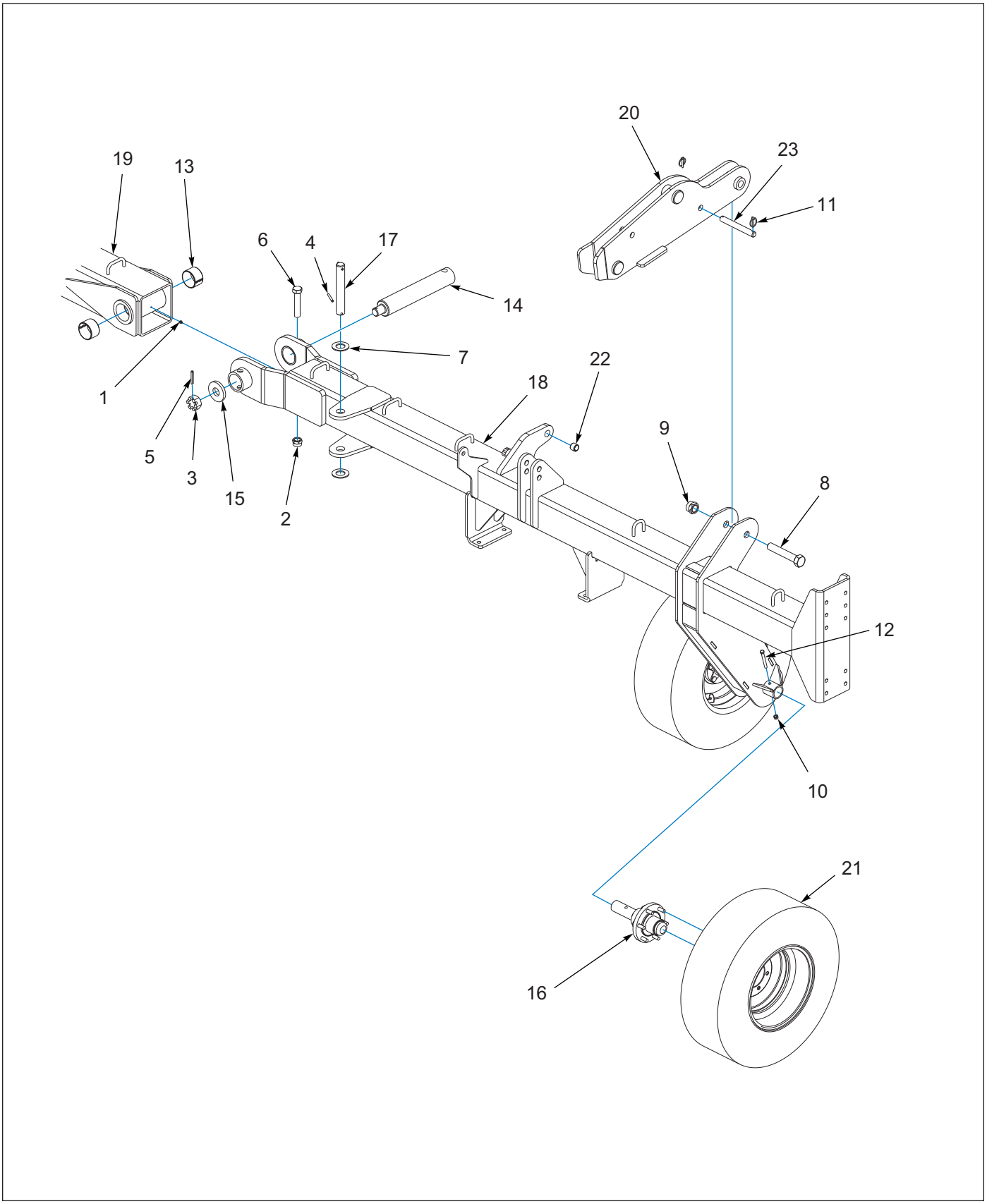

Figure 1-10: Wing Assembly

Wing Assembly

ITEM	PART NUMBER	DESCRIPTION	QTY
1	1-298-010001-1	ZERK, FITTING 1/4	4
2	1-512-010005-19	NUT, HEX LOCK 1-8, GRB	20
3	1-516-010001-27	NUT, HEX SLOT 1-1/2-6	4
4	1-647-010004240	PIN, SPRING SLOTTED 5/16 X 2-1/2	10
5	1-647-010004257	PIN, SPRING SLOTTED 3/8 X 2-1/2	4
6	1-654-010065-15	SCREW, HEX HEAD CAP 1-8 X 5, GR5	4
7	1-861-010032-32	WASHER, FLAT 1-1/2	10
8	171635	SCREW, HEX HEAD CAP 1-1/4-7 X 7-1/2, GR5	2
9	101385	NUT, HEX LOCK 1-1/4-7, GRB	2
10	101988	NUT, HEX LOCK 7/16-14, GRB	4
11	70239854	PIN, QUICK HITCH	2
12	141808	SCREW, HEX HEAD CAP 7/16-14 X 3-1/2, GR5	4
13	144341	BUSHING, SPRING 3-1/4 X 3 X 2	8
14	144372	PIN, 1-1/2 X 18-5/8	2
15	179533	WASHER, 3.063X4.0X.135	4
16	147552	6 BOLT HUB ASSEMBLY, 2" SPINDLE **(SEE PAGE 1-16)**	4
17	153859	PIN, 1-1/2 X 10	2
18	167281	WING, FOLDING SEEDER, LH	1
18	167282	WING, FOLDING SEEDER, RH **(NOT SHOWN)**	1
19	166503	WING, INNER LH TSH	1
19	166504	WING, INNER RH TSH **(NOT SHOWN)**	1
20	167287	LATCH, WING LOCK	1
21	167297	TIRE AND WHEEL ASM, 280/70R15 **(SEE PAGE 1-17)**	4
22	2-150-010008	BUSHING, STEEL 1-1/4 X 1 X 1	5
23	144355	PIN, 1 X 8	1

Hub and 2" Spindle Assembly, 6 Bolt

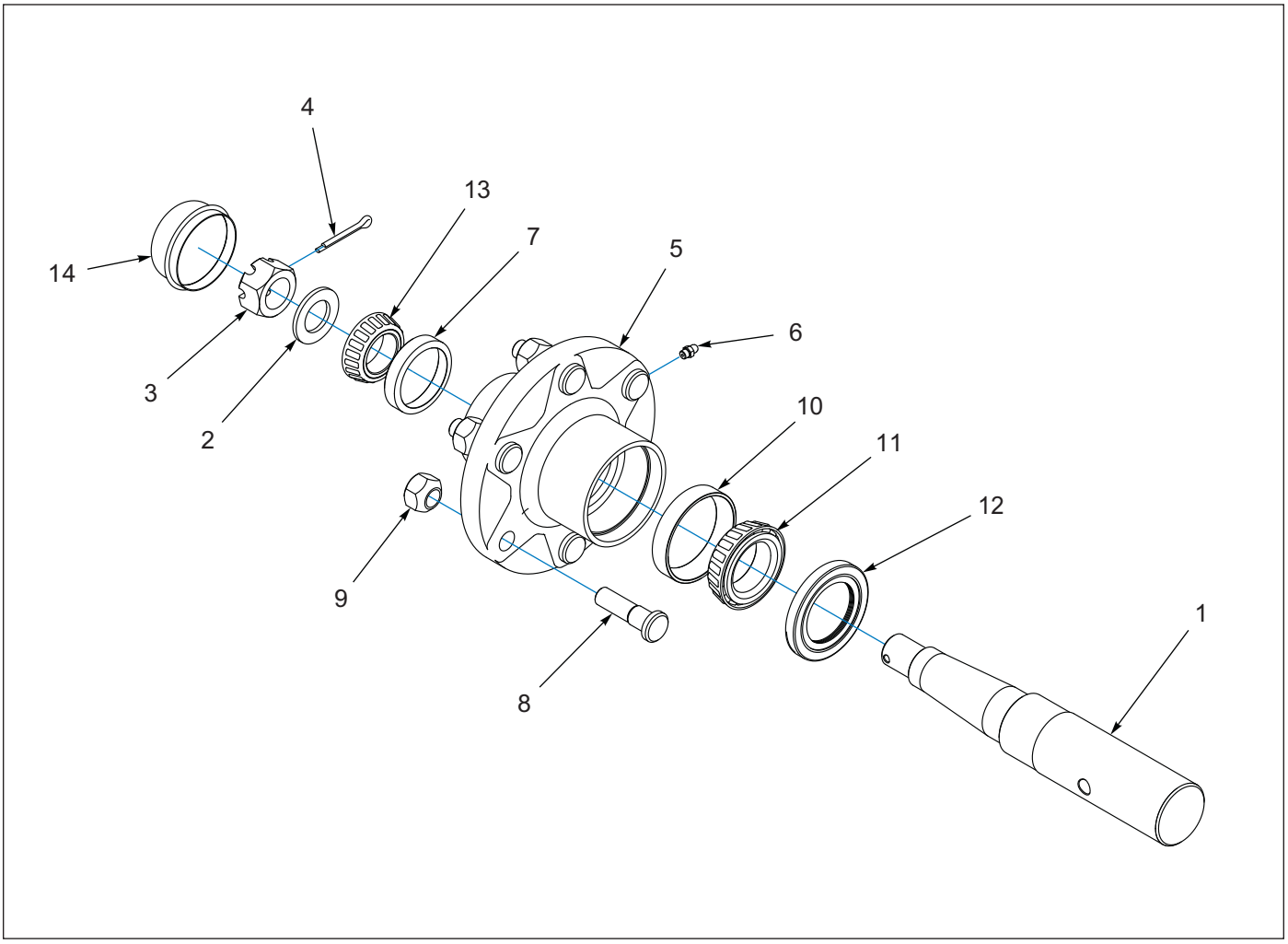

Figure 1-11: Hub and 2" Spindle Assembly, 6 Bolt

Hub and 2" Spindle Assembly, 6 Bolt

ITEM	PART NUMBER	DESCRIPTION	QTY
	147552	6 BOLT HUB ASM, 2" SPINDLE	1
1	141197	SPINDLE, 2 IN	1
2	141238	WASHER, SPINDLE	1
3	1-516-010001-20	NUT, SLTD HEX, 1-1/4 UNS	1
4	1-557-010362-51	PIN, COTTER, 3/16 X 1-1/2	1
5	140645	HUB W/CUPS, SIX BOLT **(INCLUDES ITEMS 6 - 10)**	1
6	1-298-010001-1	ZERK FITTING, 1/4-28	1
7	1-076-010010	OUTER CUP	1
8	143066	STUD BOLT, 9/16-18	6
9	210606	WHEEL NUT, 9/16-18UNF	6
10	102604	INNER CUP	1
11	102498	BORE BEARING CONE, OUTER 1.625	1
12	140554	SEAL, GREASE	1
13	1-076-010007	INNER CONE BEARING	1
14	141236	DUST CAP, WHEEL HUB	1
15	141866	HUB ASSY SIX BOLT **(KIT INCLUDES ITEMS 5 - 14)**	1

Tire and Wheel Assembly, 6 Bolt

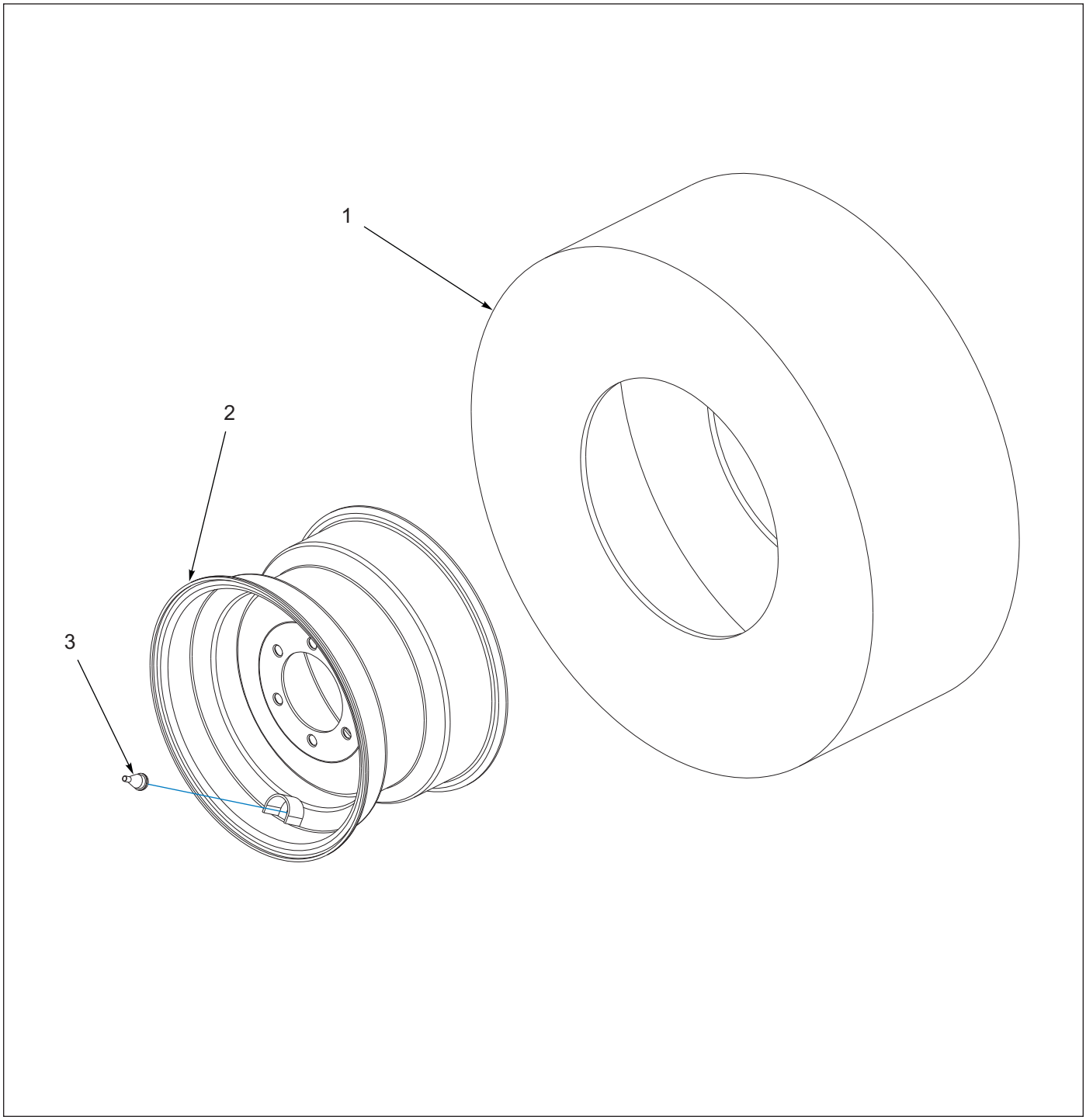

Figure 1-12: Tire and Wheel Assembly, 6 Bolt

Tire and Wheel Assembly, 6 Bolt

ITEM	PART NUMBER	DESCRIPTION	QTY
	167297	TIRE AND WHEEL ASM, 280/70R15	1
1	204384	FIRESTONE RADIAL 280/70R15	1
2	167296	WHEEL, 15 X 10 LB 6BOLT	1
3	415	VALVE STEM	1

3-PT Lift Assembly

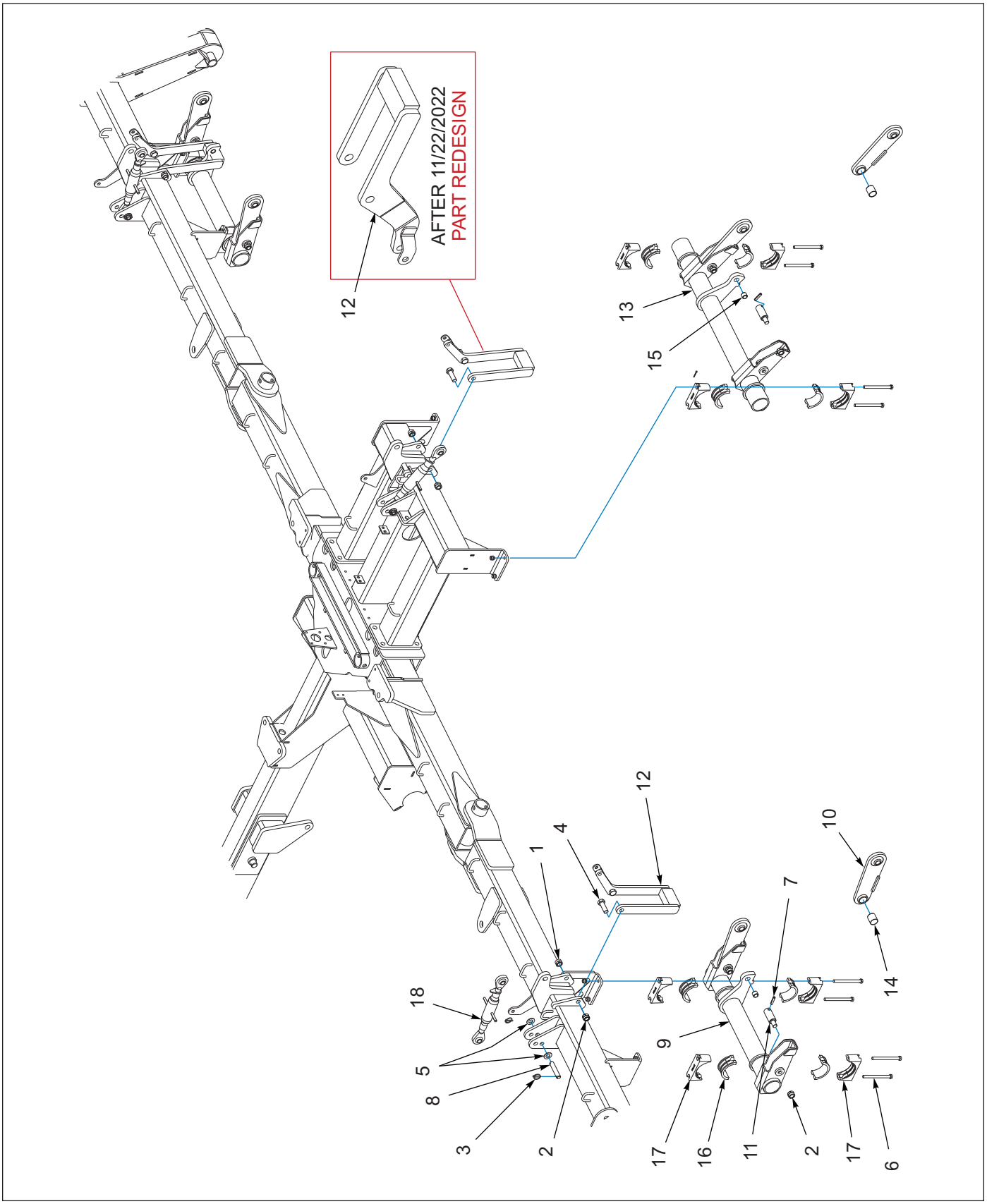

Figure 1-13: 3-PT Lift Assembly

3-PT Lift Assembly

ITEM	PART NUMBER	DESCRIPTION	QTY
1	1-512-010005-13	NUT, HEX LOCK 5/8-11, GRB	3
2	1-512-010005-19	NUT, HEX LOCK 1-8, GRB	20
3	1-557-010327	PIN, LYNCH 1/4 X 1-1/4	6
4	1-654-010125-09	SCREW, HEX HEAD CAP 1-8 X 3, GR8	6
5	1-861-010032-24	WASHER, FLAT 1" N	2
6	123096	SCREW, HEX HEAD CAP 5/8-11 X 7-1/2, GR5	16
7	141251	SPRING PIN, SLOTTED 1/2 X 2-1/4	6
8	164293	PIN, 1 X 5-1/8	3
9	166510	LIFT, THREE POINT	2
10	166511	LINK LIFT WELDMENT	6
11	166529	PIN, LIFT	6
12	166556	STOP LINK WELDMENT	3
13	166565	ROCKSHAFT LIFT WELDMENT	1
14	167277	BUSHING, 1.75 X 1.94 X 2	6
15	2-150-010008	BUSHING, STEEL 1-1/4 X 1 X 1	5
16	2P793	BEARING INSERT 4-1/2	12
17	2P794	BEARING HALF 4-1/2 INSERT	12
18	7K286	TOP LINK, CAT 2	3

Center Coil Tine Harrow Assembly

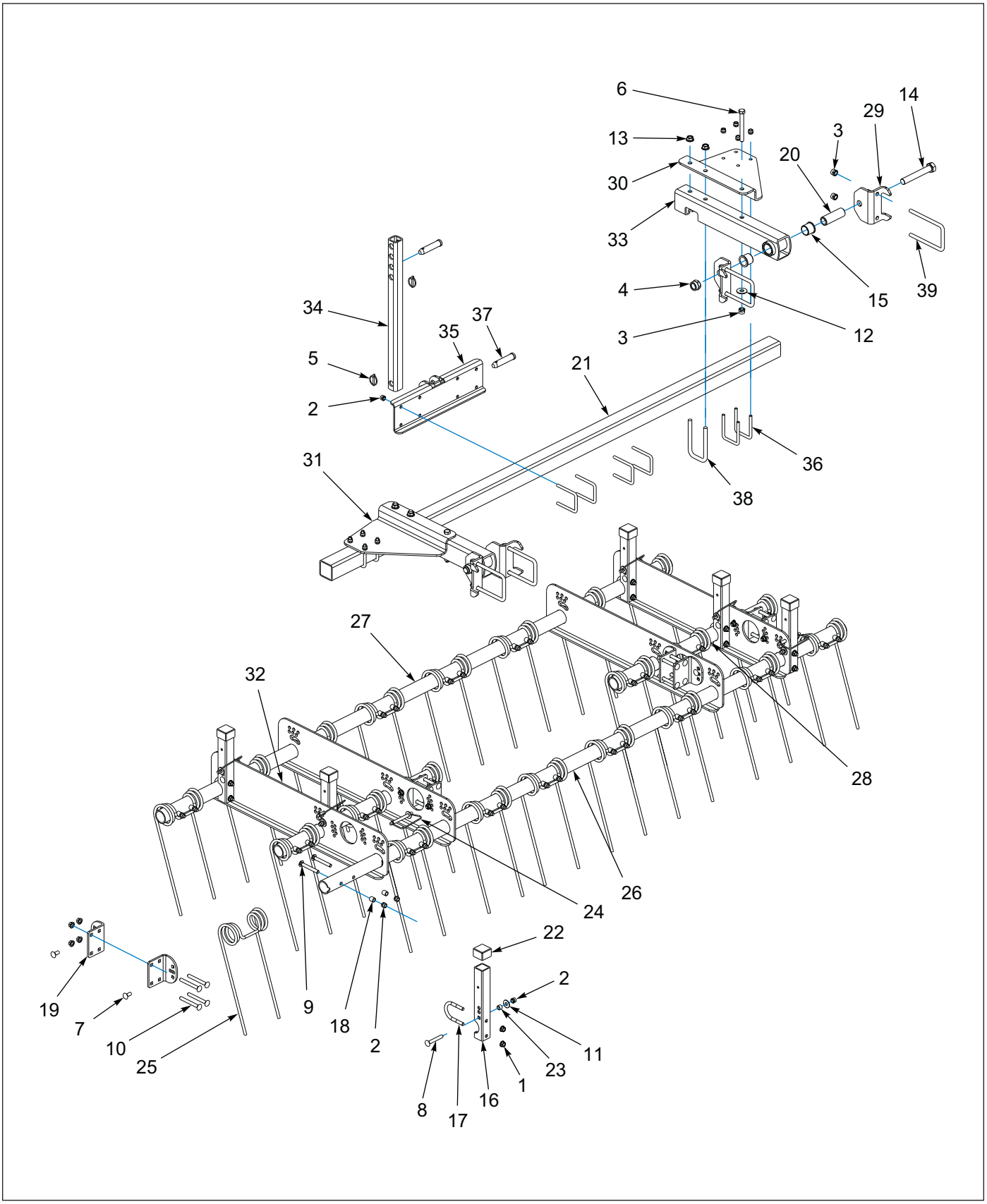

Figure 1-14: Center Coil Tine Harrow Assembly

Center Coil Tine Harrow Assembly

ITEM	PART NUMBER	DESCRIPTION	QTY
	170937	COIL TINE HARROW ASSEMBLY	1
1	1-510-010003-09	NUT, FLANGE HEAD SERRATED 1/2-13	32
2	1-512-010005-09	NUT, HEX LOCK 1/2-13, GRB	66
3	1-512-010005-13	NUT, HEX LOCK 5/8-11, GRB	10
4	1-512-010005-19	NUT, HEX LOCK 1-8, GRB	2
5	1-557-010327	PIN, LYNCH 1/4 X 1-1/4	2
6	1-654-010059-16	SCREW, HEX HEAD CAP 5/8-11 X 5-1/2, GR5	2
7	1-654-010070-02	SCREW, RD HEAD SQ NECK 1/2-13 X 1-1/4	8
8	1-654-010070-11	SCREW, RD HEAD SQ NECK 1/2-13 X 3-1/2	6
9	1-654-010070-13	SCREW, RD HEAD SQ NECK 1/2-13 X 4	44
10	1-654-010070-14	SCREW, RD HEAD SQ NECK 1/2-13 X 4-1/2	16
11	1-861-010032-15	WASHER, FLAT 1/2W	4
12	1-861-010032-19	WASHER, FLAT 5/8W	2
13	100827	NUT, FLANGE HEAD SERRATED 5/8-11	4
14	100829	SCREW, HEX HEAD CAP 1-8 X 6-1/2, GR5	2
15	140599	BEARING, FLANGE 1-1/2	4
16	154994	TUBE, ANGLE ADJUST	6
17	154995	U-BOLT, 1/2-13	6
18	154997	BUSHING, TINE RETAINER	44
19	154998	PLATE, ANGLE ADJUSTMENT	8
20	155002	BUSHING, PIVOT 1-1/2	2
21	155005	TUBE, SQ 3 X 3/16 X 107"	1
22	155927	CAP, TUBE 1.95 X 1.5 BLACK	6
23	155956	BUSHING, ANGLE ADJUSTMENT	6
24	155971	PIN, HARROW ADJUSTMENT	6
25	164315	TINE, HARROW 7/16 X 18	22
26	167294	TUBE, GANG BAR **(123.66")**	1
27	170912	TUBE, GANG BAR **(121")**	1
28	170915	TUBE, GANG BAR **(37.58")**	2
29	170918	MOUNT, HARROW ARM	4
30	170928	GUSSET, HARROW ARM RH	1
31	170929	GUSSET, HARROW ARM LH	1
32	170935	PLATE, GANG BAR 3 ROW	4
33	170938	HARROW ARM MOUNT WELDMENT	2
34	170939	LINK, TUBE	1
35	170941	LINK MOUNT WELDMENT	1
36	2P986	U-BOLT, 1/2-13 X 3-1/2 X 4-1/4	8
37	6D529	CLEVIS PIN, 1 X 4-1/2	2
38	8-102-010043	U-BOLT, SPRING CLAMP	2
39	9K616	U-BOLT, 5/8-11 X 4-11/16 X 7-1/2	4

Wing Harrow Track Remover Assembly

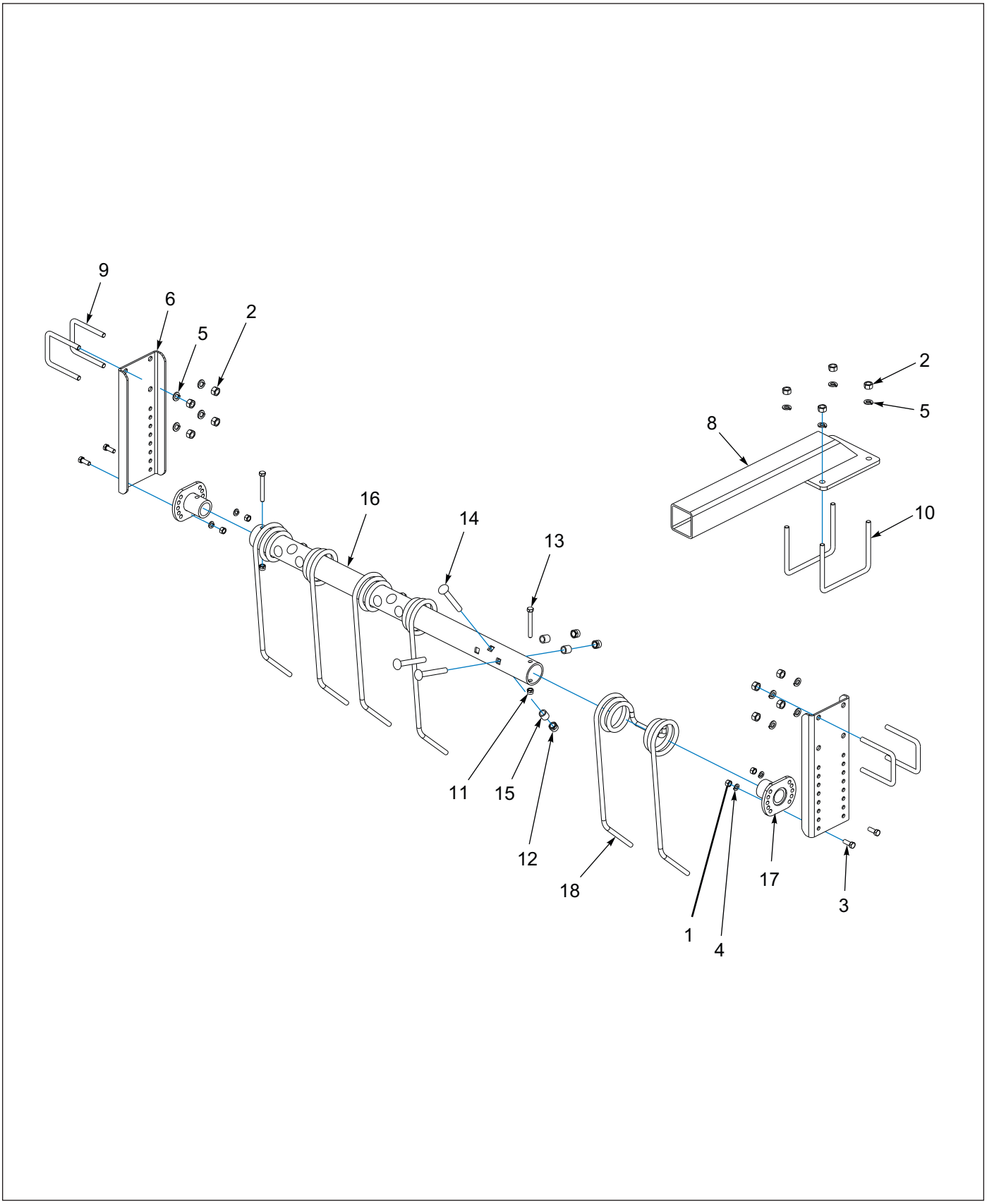

Figure 1-15: Wing Harrow Track Remover Assembly

Wing Harrow Track Remover Assembly

ITEM	PART NUMBER	DESCRIPTION	QTY
	170905	HARROW TRACK REMOVER ASSEMBLY	1
1	1-512-010007-07	NUT, HEX 3/8-16	4
2	1-512-010007-09	NUT, HEX 1/2-13	12
3	1-654-010051-05	SCREW, HEX HEAD CAP 3/8-16 X 1, GR5	4
4	1-861-010034-11	WASHER, SPLIT LOCK 3/8	4
5	1-861-010034-13	WASHER, SPLIT LOCK 1/2	12
6	167295	MOUNT, TRACKER REMOVER	2
7	169970	HARROW ASM, TRACK REMOVER **(INCLUDES ITEMS 11-18)**	1
8	170899	MOUNT WELDMENT, TRACKER REMOVER	1
9	2P986	U-BOLT, 1/2-13 X 3-9/16 X 4-1/4	4
10	4J918	U-BOLT, 1/2-13 X 6-9/16 X 5-1/4	2
11	1-512-010005-05	NUT, HEX LOCK 3/8-16, GRB	2
12	1-512-010005-09	NUT, HEX LOCK 1/2-13, GRB	9
13	1-654-010051-13	SCREW, HEX HEAD CAP 3/8-16 X 3, GR5	2
14	1-654-010070-13	SCREW, RD HEAD SQ NECK 1/2-13 X 4	9
15	154997	BUSHING, TINE RETAINER	9
16	169971	TUBE HARROW, TRACK REMOVER	1
17	170903	BRACKET MOUNT WELDMENT, HARROW	2
18	170909	TINE, HARROW 7/16 X 18	3

Row Marker Assembly - Optional

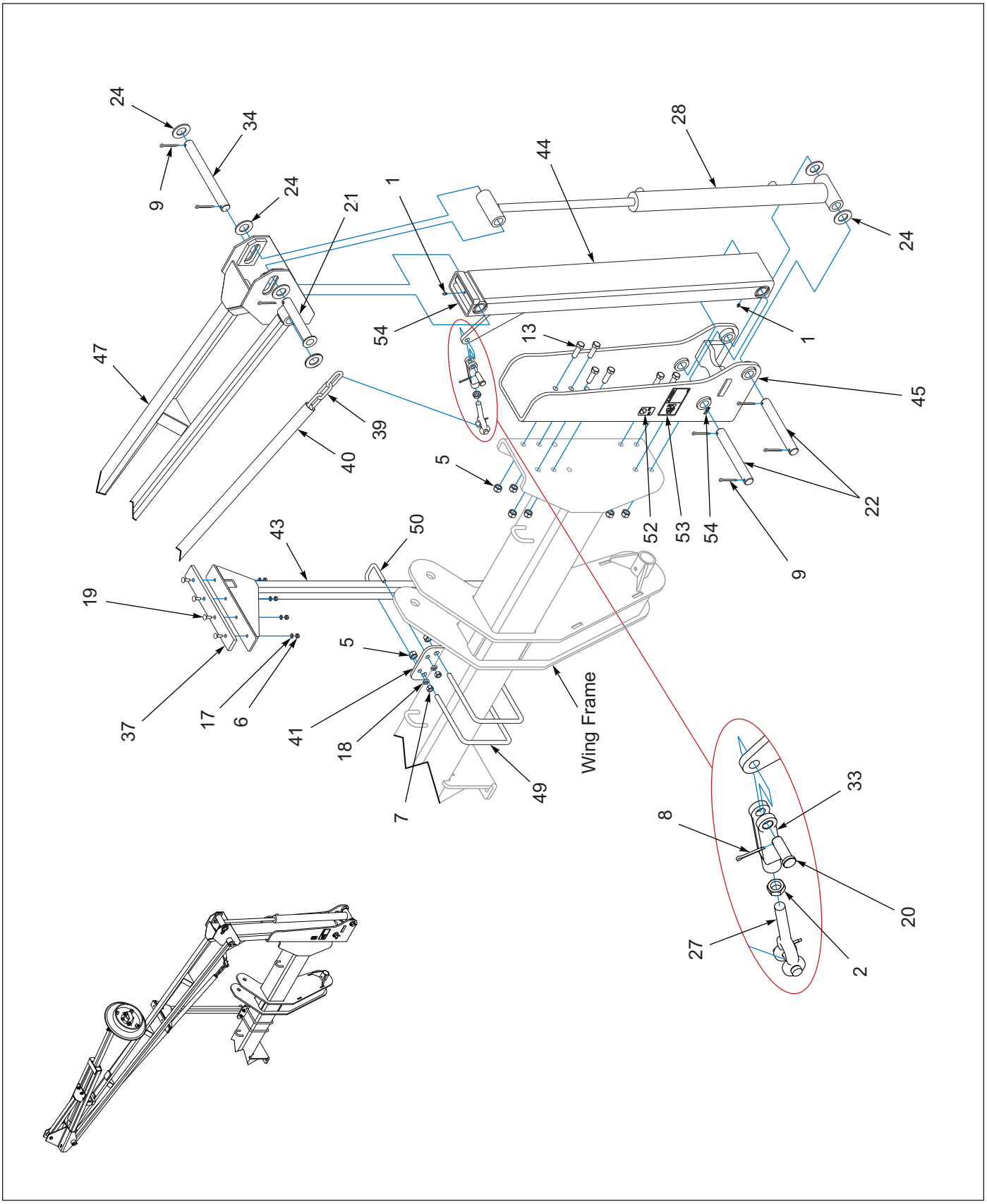

Figure 1-16: Row Marker Assembly - Optional (1 of 2)

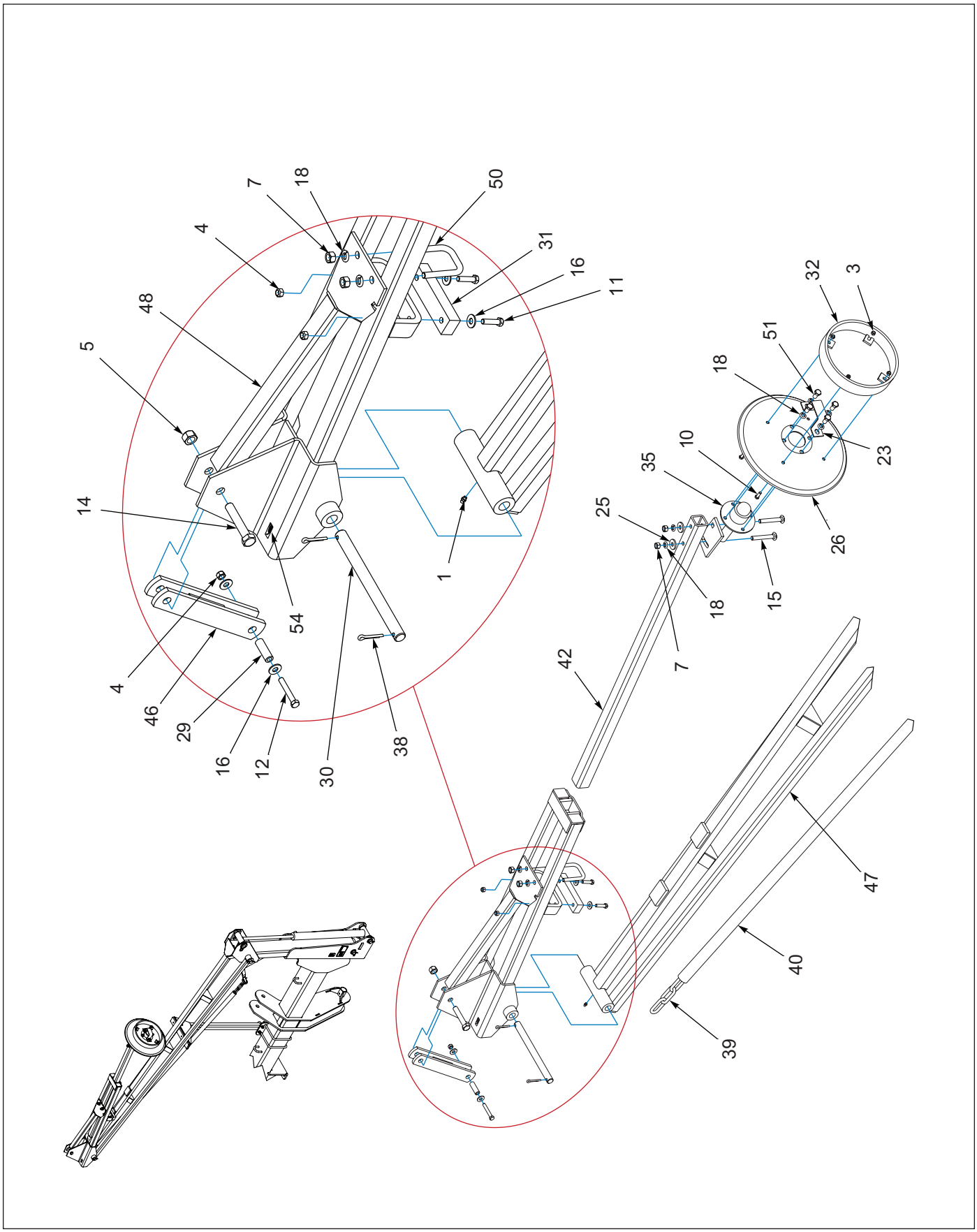

Figure 1-17: Row Marker Assembly - Optional (2 of 2)

Row Marker Assembly - Optional

ITEM	PART NUMBER	DESCRIPTION	QTY
	171633	ROW MARKER ASSEMBLY **(ASSEMBLY PARTS)**	1
1	1-298-010001-1	FITTING, GREASE 1/4-28 STR SHORT	6
2	1-511-010001-07	NUT, HEX JAM 5/8-11	2
3	1-512-010005-03	NUT, HEX, SLFLKG, 5/16-18UNC, GRB	8
4	1-512-010005-05	NUT, HEX, SLFLKG, 3/8-16UNC, GRB	6
5	1-512-010005-13	NUT, HEX, SLFLKG, 5/8-11UNC, GRB	26
6	1-512-010007-06	NUT, HEX, 5/16-18UNC, GR2	8
7	1-512-010007-09	NUT, HEX, 1/2-13UNC, GR2	16
8	1-557-010362-40	PIN, COTTER, 5/32 X 1-1/4	4
9	1-557-010362-63	PIN, COTTER, 1/4 X 2	14
10	1-654-010049-05	SCREW, HX CP 5/16-18UNC X 1, GR5	8
11	1-654-010051-07	SCREW, HEX, 3/8-16UNC X 1-1/2, GR5	4
12	1-654-010051-11	SCREW, HEX, 3/8-16UNC X 2-1/2, GR5	2
13	1-654-010059-05	SCREW, HEX, 5/8-11UNC X 2, GR5	16
14	1-654-010059-11	SCREW, HEX, 5/8-11 UNC X 3-1/2, GR5	2
15	1-654-010070-11	SCREW, RDHD, SQNK, 1/2-13 X 3-1/2	4
16	1-861-010032-11	WASHER, FLAT ZP/CD, 3/8W	8
17	1-861-010034-10	WASHER, LKG, HLCL SPR, 5/16	8
18	1-861-010034-13	WASHER, LKG, HLCL SPR, 1/2	24
19	104031	SCREW, RDHD, SQNK, 5/16-18UNC X 1	8
20	111-2590	TIE BOLT	2
21	116032	PIN, WASHER ROW MARKER WLDMT	2
22	116034	PIN, DOUBLE HOLE, ROW MARKER	4
23	116038	SHIPPING RETAINER, MARKER HUB	2
24	116100	WASHER, FLAT, ZP/CD 1-1/4 N	12
25	116254	WASHER, MARKER MOUNT	4
26	116337	BLADE, SOLID, 16' PLAIN	2
27	116339	YOKE, EXTERNAL THREADED, PLAIN	2
28	116344	CYLINDER, MARKER 2.5 X 20 **(SEE PAGE 1-95) (SEE PAGE 1-96)**	2
29	116354	TUBE, 5/8 X 1-7/8	2
30	116355	PIN, 7/8 X 11	2
31	116366	RUBBER SPACER, ROW MARKER OUTER ARM	2
32	116390	DEPTH BAND WLDMT	2
33	116405	YOKE, INTERNAL THREADED CLEVIS	2
34	116438	PIN, 1-1/4 X 12-1/4	2
35	116446	ROW MARKER LH, SPINDLE WLDMT	1
36	116447	ROW MARKER RH, SPINDLE WLDMT **(NOT SHOWN)**	1
37	117186	ARMORITE BRACE CUSHION	2
38	119084	PIN, COTTER, 1/4 X 1-1/4	4
39	120369	CHAIN, MONOSEM	2
40	120400	CHAIN COVER, ROW MARKER 16 ROW	2
41	167289	MOUNT, MARKER SUPPORT	2
42	167292	TUBE-MARKER, EXTENSION	2
43	167302	SUPPORT-MARKER, SEEDER 36	2
44	167303	ARM-ROW MARKER, FIRST, WLDMT	2
45	167306	MOUNT, MARKER OFFSET	2
46	167307	LINK-ROW MARKER, WLDMT	2
47	169974	ARM-MIDDLE, ROW MARKER, WLDMNT	2
48	169975	ARM-OUTER, ROW MARKER, WLDMNT	2

Row Marker Assembly - Optional

ITEM	PART NUMBER	DESCRIPTION	QTY
49	70593063	U-BOLT, 5/8-11	4
50	8-102-010019	U-BOLT, SCRAPER MT **(1/2-13)**	6
51	830025	SCREW.HEX, 1/2-20UNF X 1, GR8	8
52	1410224	DECAL-PINCH POINT	2
53	141597	DECAL, DANGER ELECTROCUTION	2
54	2-573-010330-03	DECAL, LUBRICATION, 50 HOURS	6

Row Marker Hydraulics - Optional

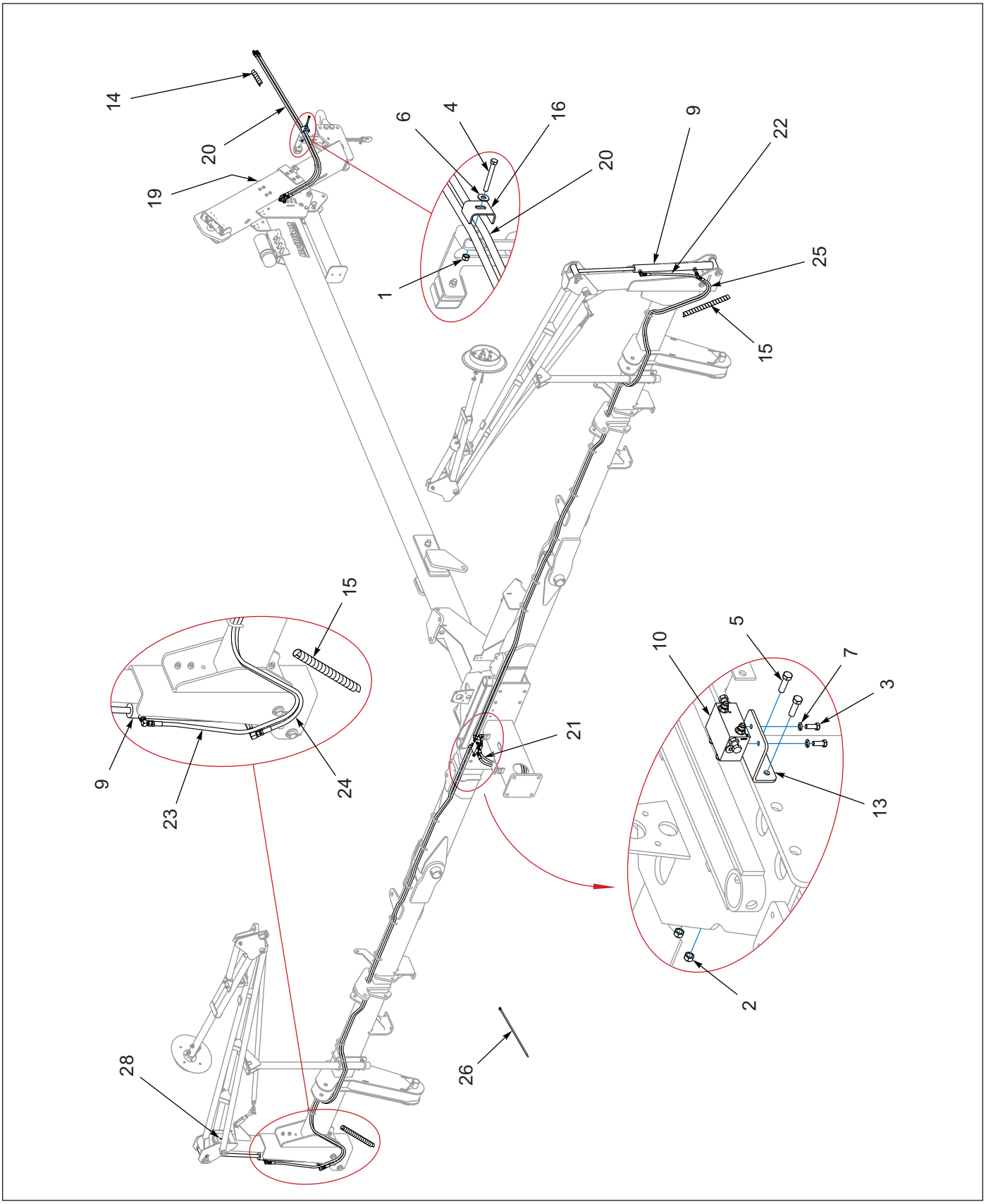

Figure 1-18: Row Marker Hydraulics Layout - Optional

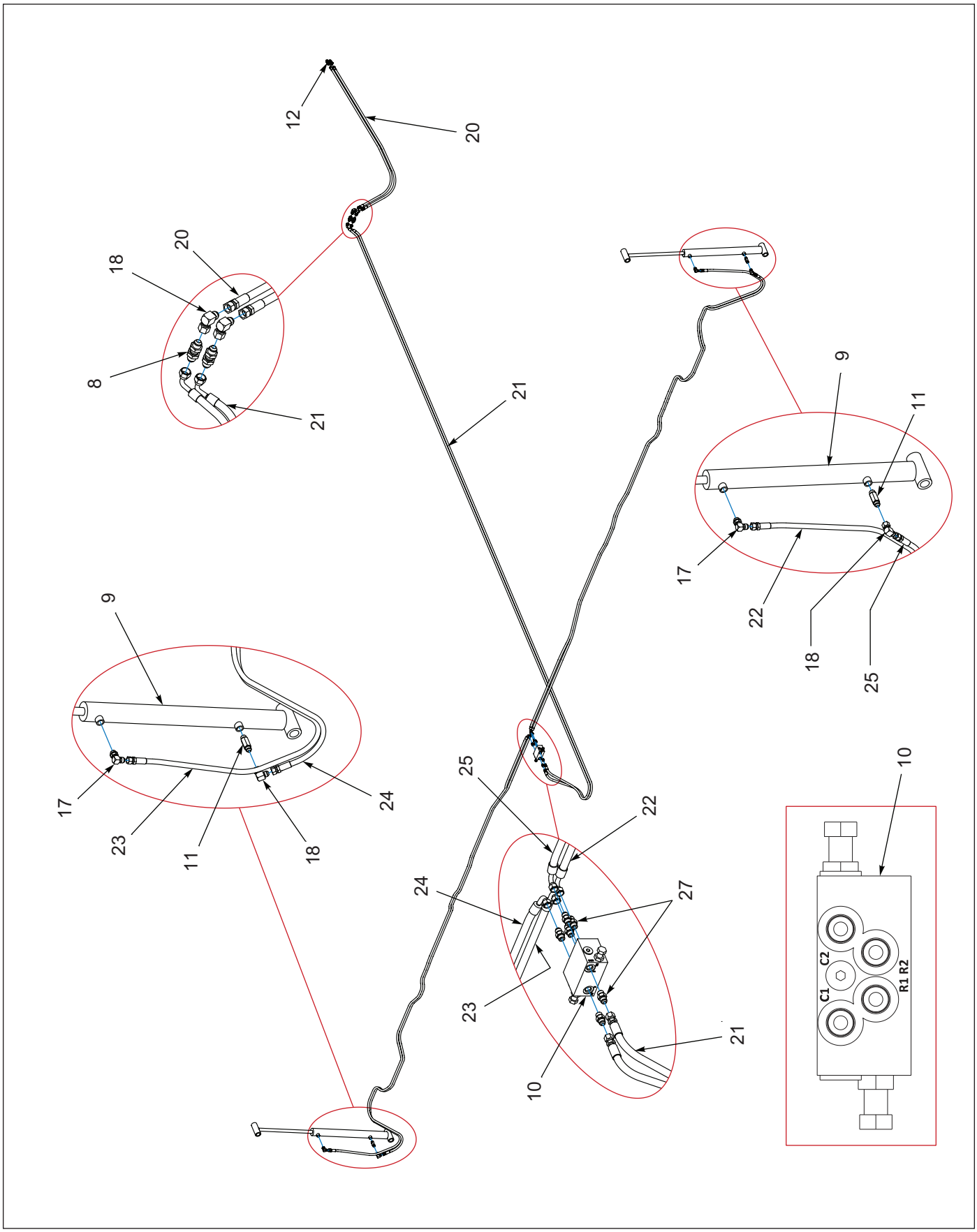

Figure 1-19: Row Marker Hydraulics Schematic - Optional

Row Marker Hydraulics - Optional

ITEM	PART NUMBER	DESCRIPTION	QTY
	171633	ROW MARKER ASSEMBLY **(HYDRAULIC PARTS)**	1
1	1-512-010005-05	NUT, HEX, SLFLKG, 3/8-16UNC, GRB	6
2	1-512-010005-09	NUT, HEX, SLFLKG, 1/2-13UNC, GRB	2
3	1-654-010051-05	SCREW, HEX, 3/8-16UNC X 1, GR5	2
4	1-654-010051-13	SCREW, HEX, 3/8-16UNC X 3, GR5	1
5	1-654-010055-04	SCREW, HEX, 1/2-13UNC X 1-3/4, GR5	2
6	1-861-010032-11	WASHER, FLAT ZP/CD, 3/8W	8
7	1-861-010034-11	WASHER, LKG, HLCL SPR, 3/8	2
8	102-0322	37 FLARE BULKHEAD/37 FLARE	2
9	116344	CYLINDER, MARKER 2.5 X 20 **(SEE PAGE 1-95) (SEE PAGE 1-96)**	2
10	116350	VALVE, MARKER SEQUENCE	1
11	140893	ADAPTER STR LONG, #8JIC-#80RB	2
12	141828	COUPLER, MALE 3/4-16 O-RING	2
13	166534	MOUNT-VALVE	1
14	172973	HOSE WRAP, RED	1
15	1P995	WRAP-HOSE POLY SPIRAL 3/4 ID **(BLACK 26")**	2
16	2-181-010001	HOSE CLAMP	1
17	2062-8-8S	ADAPTER, 90 #8 O-RING-TUBE	2
18	2071-8-8S	ADAPTER, 90 #8 FLR SWIVEL #8 JIC	4
19	219155	DECAL-HOSE ID, 4630 W/MARKERS	1
20	141878	HOSE ASSY, 3/8 X 90 #8JIC X #80R	2
21	104329	HOSE ASSY, 3/8 X 312, JIC, #8 X 90-#6	2
22	169958	HOSE ASSY, 3/8 X 277, 8FJ X 6FJ X 90 **(R1)**	1
23	169959	HOSE ASSY, 3/8 X 267, 8FJ X 6FJ X 90 **(R2)**	1
24	169960	HOSE ASSY, 3/8 X 248, 8J X 6FJ X 90 **(C2)**	1
25	176897	HOSE ASSY, 3/8 X 258, 8FJ X 6FJ X 90 **(C1)**	1
26	105-0228	CABLE TIE	30
27	202702-6-6S	ADAPTER, STR,#6 SAEX#6 JIC	6
28	2-573-010330-03	DECAL, LUBRICATION, 50 HOURS	6

Seeder Assembly Options

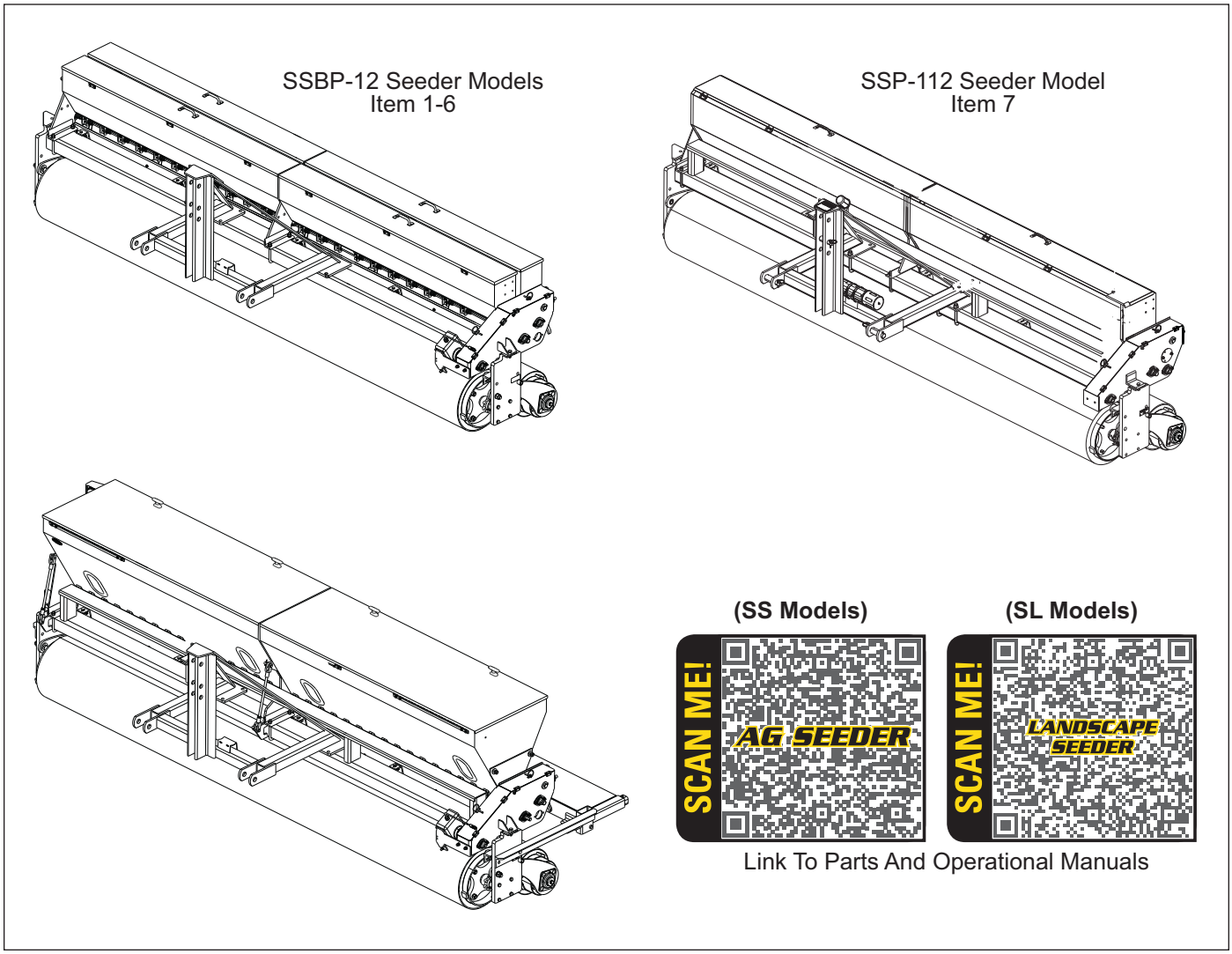

Figure 1-20: Seeder Assembly Options

Seeder Assembly Options

ITEM	SEEDER OPTION P/N	DESCRIPTION	OPER MANUAL FORM#	PARTS MANUAL FORM#
1	171615	SSBP-36 SEEDER, CAGE AGITATOR **(SSBP12)**	1P480	1P481
2	171616	SSBP-36 SEEDER, CAGE AGITATOR DIVIDERS **(SSBP12)**	1P480	1P481
3	171617	SSBP-36 SEEDER, BLADE & CAGE AGITATOR **(SSBP12)**	1P480	1P481
4	171618	SSBP-36 SEEDER, BLADE & CAGE DIVIDERS **(SSBP12)**	1P480	1P481
5	171619	SSBP-36 SEEDER, BRUSH & CAGE AGITATOR **(SSBP12)**	1P480	1P481
6	171620	SSBP-36 SEEDER, BRUSH & CAGE DIVIDERS **(SSBP12)**	1P480	1P481
7	171621	SSP-136 SEEDER, MID CAP AG **(SSP112)**	9K713	9K712
8	171622	SSP-2361 SEEDER HIGH CAPACITY AG **(SSP2121)**	1P126	1P125
9	171623	SLP-2361, LANDSCAPE SEEDER **(SLP2121)**	9K998	9K997
10	171624	SLP-2361, LANDSCAPE SEEDER REAR SPROCKET **(SLP2121)**	9K998	9K997
11	171627	SLPB-2361, LANDSCAPE SEEDER **(SLPB2121)**	9K998	9K997
12	171628	SLPB-2361 LANDSCAPE SEEDER REAR SPROCKET **(SLPB2121)**	9K998	9K997
13	171630	SLP-3361 SEEDER, LANDSCAPE **(SLPB3121)**	1P124	1P123

Center Walk Board

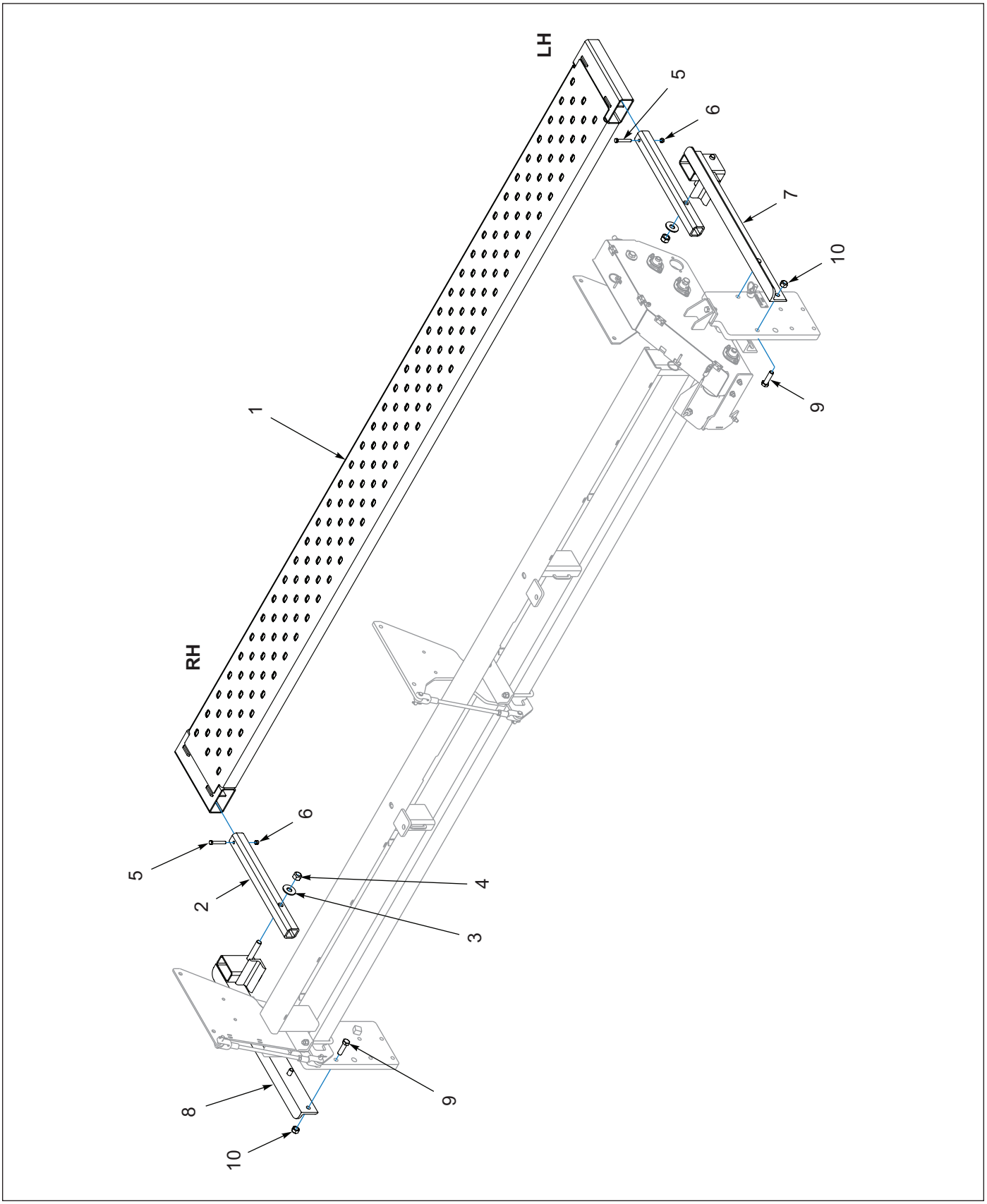

Figure 1-21: Center Walk Board

Center Walk Board

ITEM	PART NUMBER	DESCRIPTION	QTY
1	6K891	12' PLATFORM	1
2	7K533	TUBE	2
3	1-861-010032-21	WASHER, FLAT 3/4 W, ZP/CD	2
4	1-512-010005-15	NUT, HEX, SLFLKG GRB 3/4-10	2
5	1-654-010051-11	SCREW, HX CP 3/8-16 X 2-1/2, G5, ZP	2
6	1-512-010005-05	NUT, HEX, SLFLKG GRB 3/8-16	2
7	7K528	LEFT SUPPORT	1
8	7K529	RIGHT SUPPORT	1
9	1-654-010059-06	SCREW. HEX CAP 5/8-11 X 2-1/4, G5	4
10	1-512-010005-13	NUT, HEX SLFLKG GRB 5/8-11	4

Left Hand Walk Board (Used on High Capacity Seeders Only)

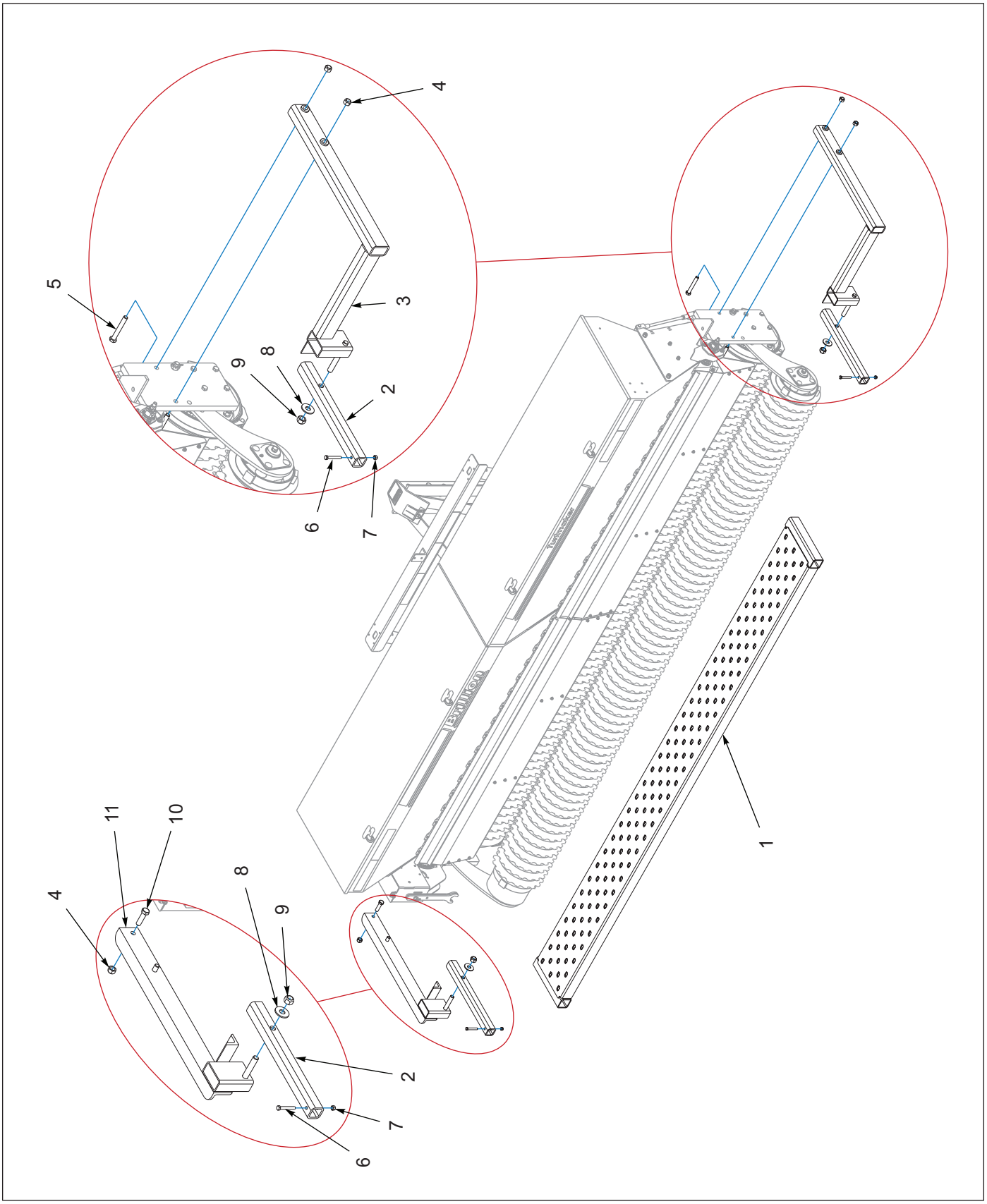

Figure 1-22: Left Hand Walk Board

Left Hand Walk Board (Used on High Capacity Seeders Only)

ITEM	PART NUMBER	DESCRIPTION	QTY
1	191881	PLATFORM, 10FT 6IN	1
2	7K533	TUBE	2
3	191383	SUPPORT, RH OFFSET	1
4	1-512-010005-13	NUT, LOCK 5/8-11 GRB, ZP	3
5	1-654-010059-14	SCREW, HEX CAP 5/8-11 X 4-1/2, GR5	2
6	1-654-010051-11	SCREW, HX CP 3/8-16 X 2-1/2 G5, ZP	2
7	1-512-010005-05	NUT, LOCK 3/8-16 GRB, ZP	2
8	1-861-010032-21	WASHER, FLAT 3/4 W, ZP/CD	2
9	1-512-010005-15	NUT, HEX, SLFLKG GRB 3/4-10	2
10	1-654-010059-06	SCREW, HEX CAP 5/8-11 X 2-1/4, GR5	1
11	7K528	LEFT SUPPORT	1

Right Hand Walk Board (Used on High Capacity Seeders Only)

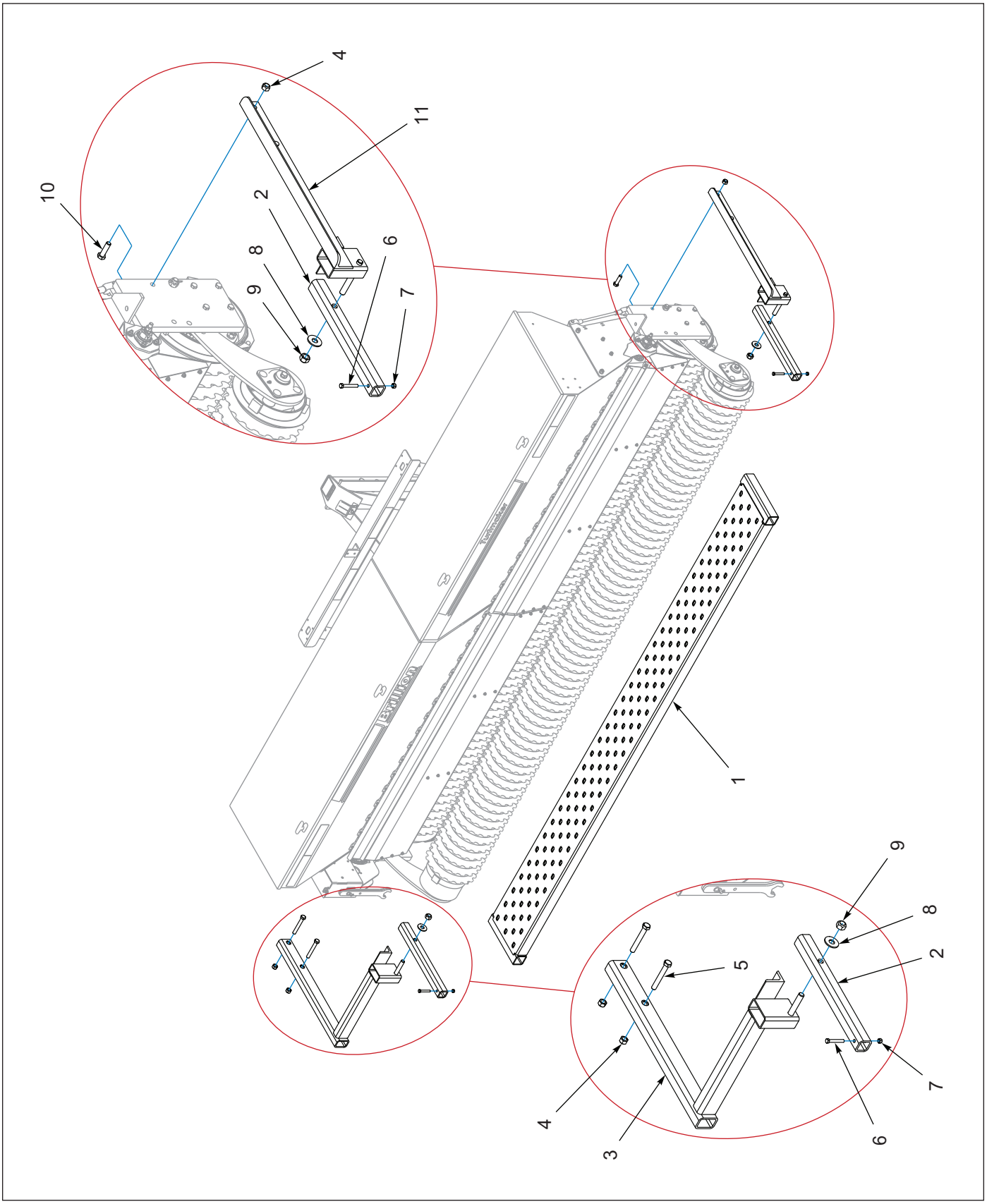

Figure 1-23: Right Hand Walk Board

Right Hand Walk Board (Used on High Capacity Seeders Only)

ITEM	PART NUMBER	DESCRIPTION	QTY
1	191881	PLATFORM, 10FT 6IN	1
2	7K533	TUBE	2
3	191382	SUPPORT, LH OFFSET	1
4	1-512-010005-13	NUT, LOCK 5/8-11 GRB, ZP	3
5	1-654-010059-14	SCREW, HEX CAP 5/8-11 X 4-1/2, GR5	2
6	1-654-010051-11	SCREW, HEX CAP 3/8-16 X 2-1/2 G5, ZP	2
7	1-512-010005-05	NUT, LOCK 3/8-16 GRB, ZP	2
8	1-861-010032-21	WASHER, FLAT 3/4 W, ZP/CD	2
9	1-512-010005-15	NUT, HEX, SLFLKG GRB 3/4-10	2
10	1-654-010059-06	SCREW, HEX CAP 5/8-11 X 2-1/4, GR5	1
11	7K529	RIGHT SUPPORT	1

Lighting Assemblies

*SEE SEEDER MANUALS FOR LIGHT BRACKET ASSEMBLY.
LIGHT ASSEMBLIES VARY PER MODEL AND DATE.

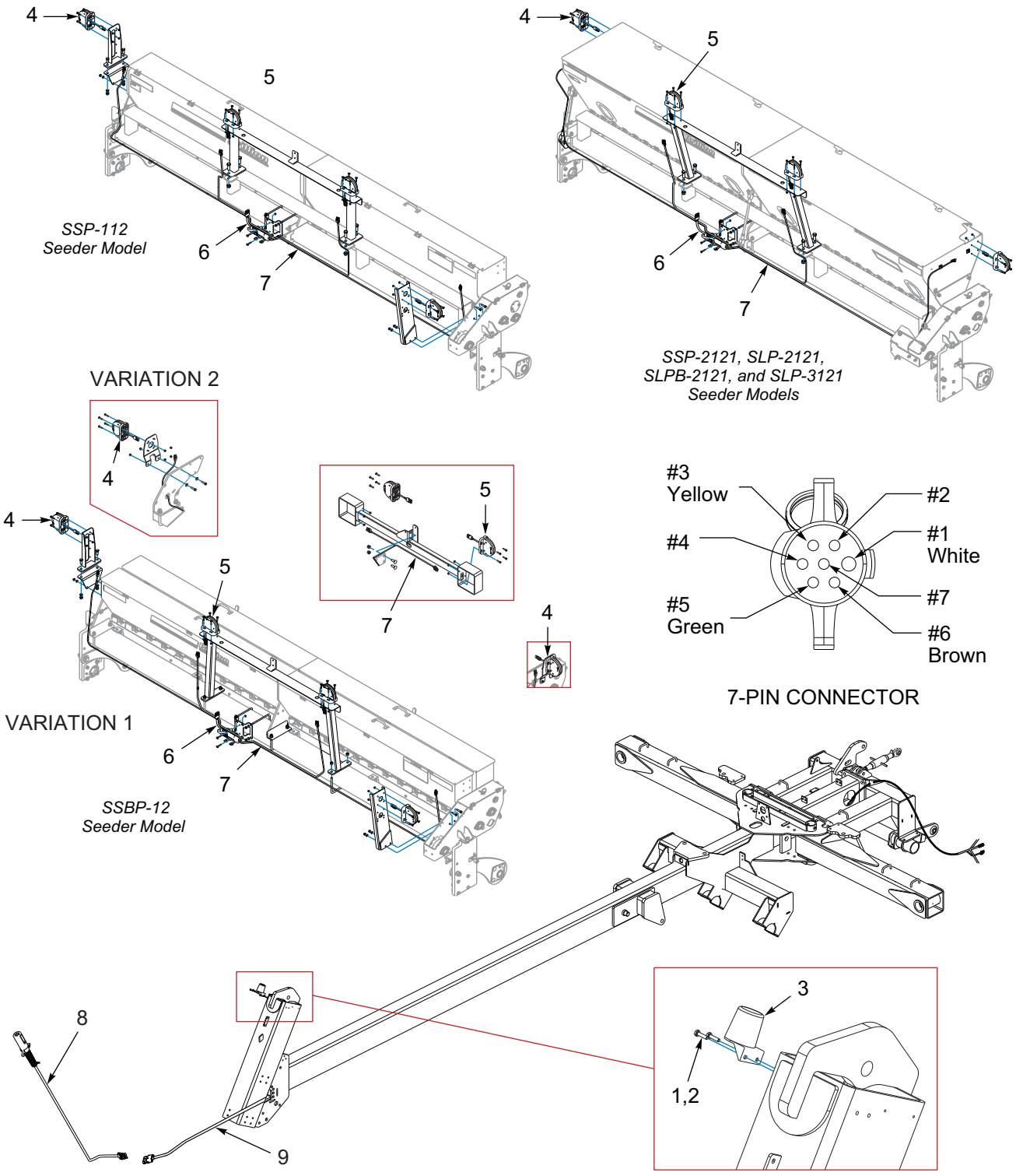

Figure 1-24: Lighting Assemblies

Lighting Assemblies

ITEM	PART NUMBER	DESCRIPTION	QTY
1	1-512-010005-01	NUT, HEX LOCK 1/4-20, GRB	16
2	1-654-010047-06	SCREW, HEX HEAD CAP 1/4-20 X 1, GR5	2
3	2-368-010287	HARNESS STOR-AWAY	1
4	174436	LAMP, AG AMBER SINGLE LED	2
5	174435	LAMP, AG RED SINGLE LED	2
6	174437	MODULE, AG FLASHER CONTROL	1
7	178513	HARNESS, LAMP 66 X 138	1
8	178514	HARNESS, 7 PIN/4 PIN WP, 10'	1
9	234453	HARNESS 400" EXT	1
9	185976	HARNESS, MAIN **(CONSOLE W/CLUTCH CONTROL)**	1

Harness Connectors can be purchased separately. **(SEE PAGE 1-70 and 1-71)**

Brillion Elite Mini Monitor - Single Seed Box Electrical Schematic

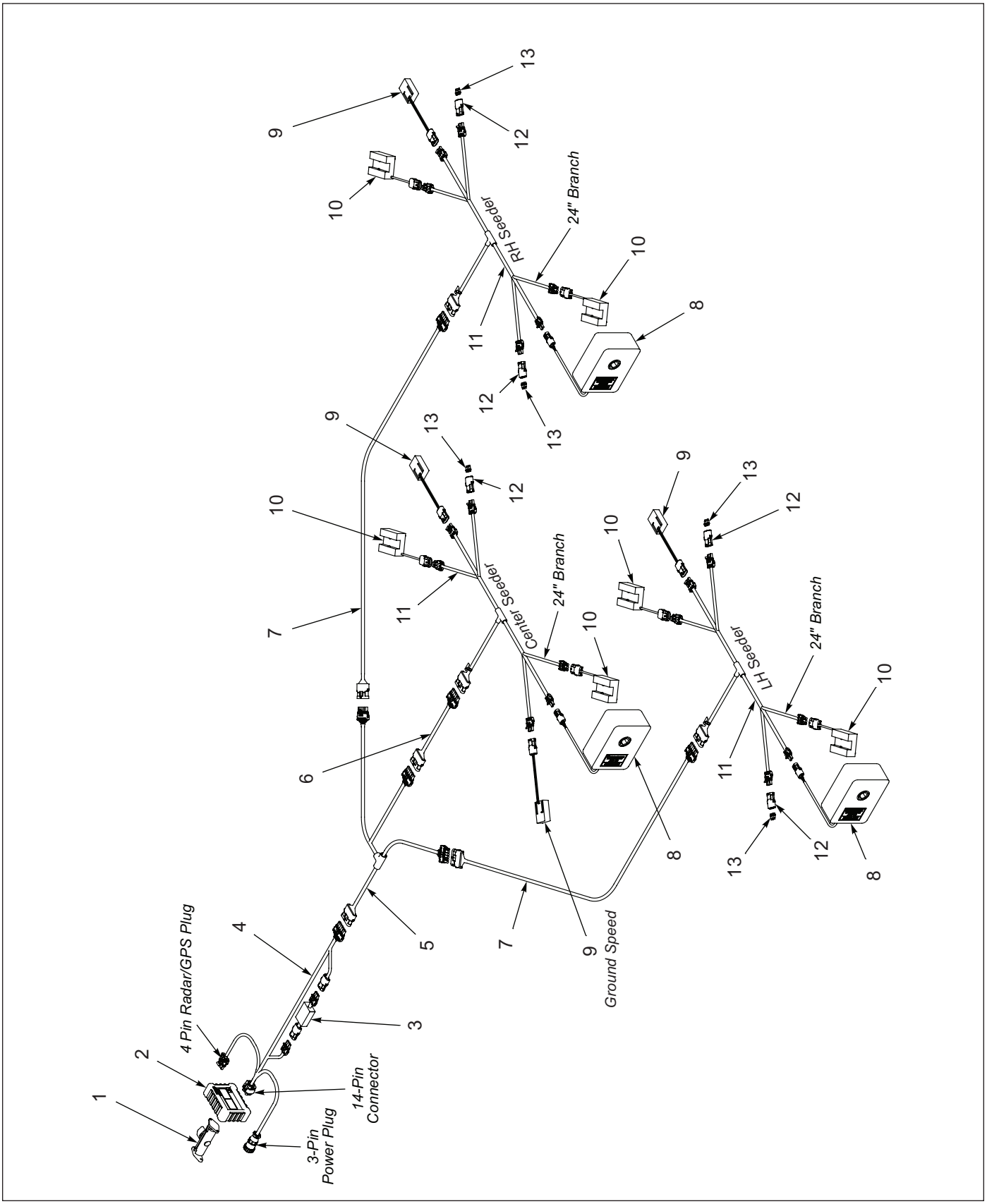

Figure 1-25: Brillion Elite Mini Monitor by Loup - Single Seed Box Electrical Schematic

Brillion Elite Mini Monitor - Single Seed Box Electrical Schematic

ITEM	PART NUMBER	DESCRIPTION	QTY
1	174434	MOUNT, LOUP II MONITOR	1
2	233483	MONITOR,BRILLION ELITE MINI	1
3	233480	SMART CLUTCH RELAY	1
4	233479	HARNESS, ELITE MINI, TRACTOR	1
5	233478	HARNESS, MAIN	1
6	233482	HARNESS, 72" EXTENSION	1
7	233481	HARNESS, 240" EXTENSION	2
8	4K956	ELECTRIC CLUTCH	3
9	174419	SENSOR, SMART SHAFT	4
10	174399	SENSOR, BIN LEVEL	6
11	233477	HARNESS, SEEDER	3
12	194841	SHROUD,3-PIN WEATHER PACK	5
13	151273	PLUG SEAL,CABLE CAVITY	15

Harness Connectors can be purchased separately. **(SEE PAGE 1-70 and 1-71)**

Brillion Elite Mini Monitor - Double Seed Box Electrical Schematic

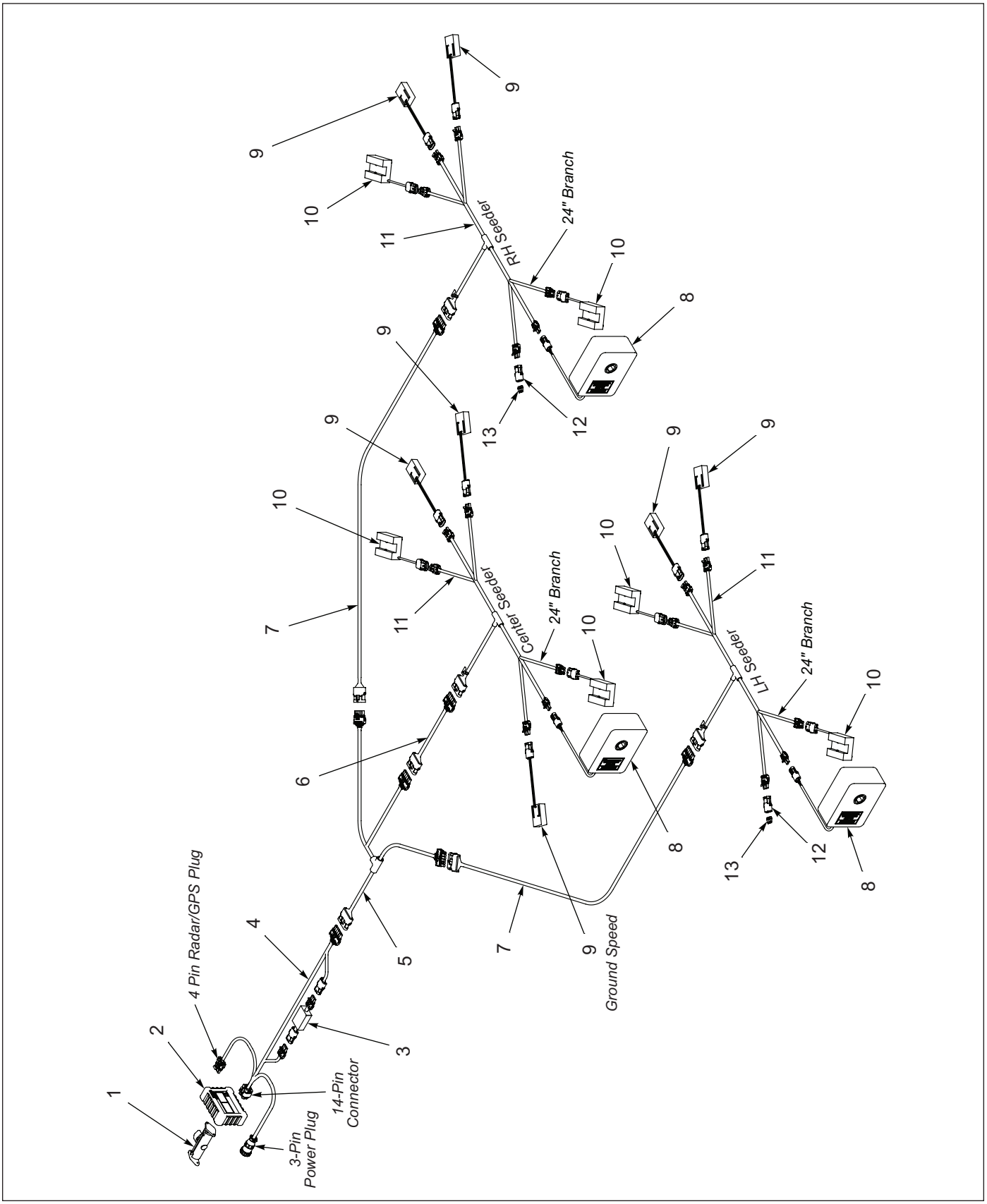

Figure 1-26: Brillion Elite Mini Monitor by Loup - Double Seed Box Electrical Schematic

Brillion Elite Mini Monitor - Double Seed Box Electrical Schematic

ITEM	PART NUMBER	DESCRIPTION	QTY
1	174434	MOUNT, LOUP II MONITOR	1
2	233483	MONITOR,BRILLION ELITE MINI	1
3	233480	SMART CLUTCH RELAY	1
4	233479	HARNESS, ELITE MINI, TRACTOR	1
5	233478	HARNESS, MAIN	1
6	233482	HARNESS, 72" EXTENSION	1
7	233481	HARNESS, 240" EXTENSION	2
8	4K956	ELECTRIC CLUTCH	3
9	174419	SENSOR, SMART SHAFT	7
10	174399	SENSOR, BIN LEVEL	6
11	233477	HARNESS, SEEDER	3
12	194841	SHROUD,3-PIN WEATHER PACK	2
13	151273	PLUG SEAL,CABLE CAVITY	6

Harness Connectors can be purchased separately. **(SEE PAGE 1-70 and 1-71)**

Brillion Elite Mini Monitor - Ground Speed

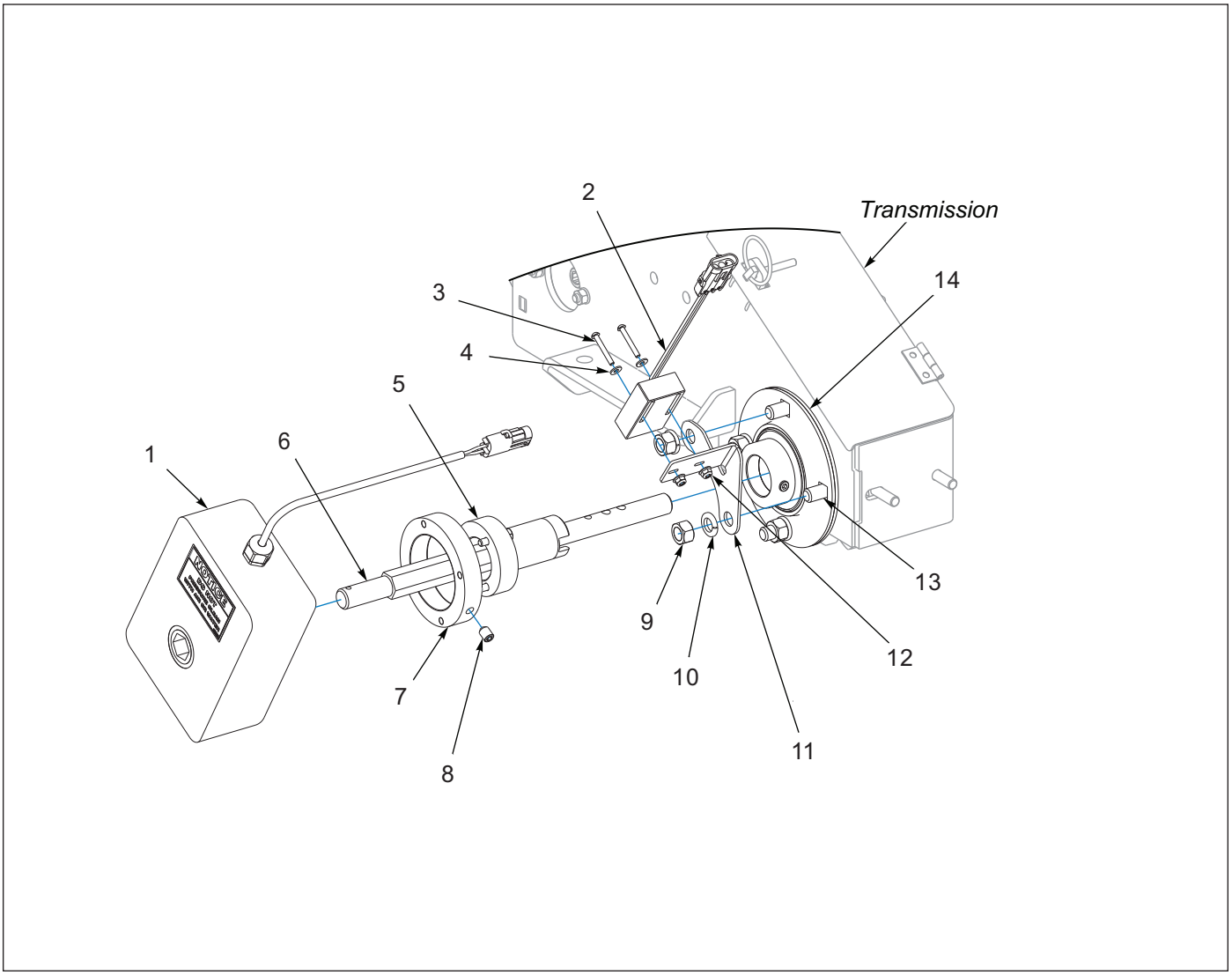

Figure 1-27: Brillion Elite Mini Monitor - Ground Speed

Brillion Elite Mini Monitor - Ground Speed

ITEM	PART NUMBER	DESCRIPTION	QTY
1	4K956	ELECTRIC CLUTCH	1
2	174419	SENSOR, SMART SHAFT	1
3	5K262	SCREW,RD HD MACH #8-32X1-1/4	2
4	1-861-010032-02	WASHER,FL #8 ZP/CD	2
5	5K227	QUILL SHAFT W/BUSHING	1
6	5K156	INPUT SHAFT	1
7	233485	ACTUATOR ASM, 2-3/4" SHAFT **(INCLUDES ITEM 8)**	1
8	122709	SCREW,SET,HXSKTCPPT 3/8-16X1/2	1
9	1-512-010007-09	NUT, HEX 1/2-13 GR2 ZP	1
10	1-861-010034-13	WASHER, LKG HLCL SPR, 1/2	1
11	233476	BRACKET, PICKUP SWITCH	1
12	234115	NUT,FLANGE NY-LOK #8-32	2
13	1-654-010055-02	SCREW 1/2-13UNCX1-1/4 CP GR5	4
14	5K226	FLANGETTE	1

Brillion Elite Mini Monitor - SSBP12 Front Seed Box Seed Shaft Sensor

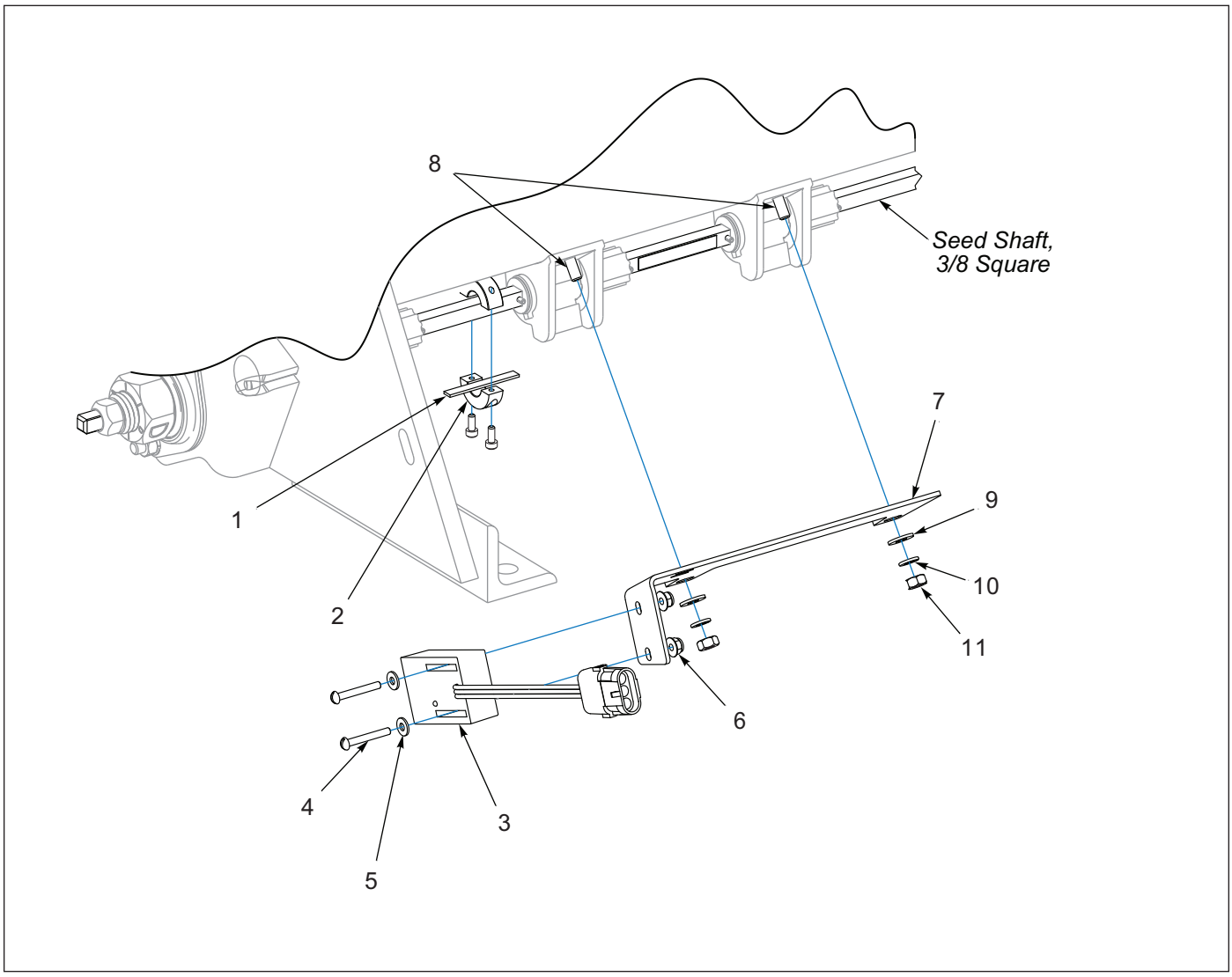

Figure 1-28: Brillion Elite Mini Monitor - SSBP12 Front Seed Box Seed Shaft Sensor

Brillion Elite Mini Monitor - SSBP12 Front Seed Box Seed Shaft Sensor

ITEM	PART NUMBER	DESCRIPTION	QTY
1	234193	MAGNET,2 X 1/4 X 1/16	1
2	233496	COLLAR, MAGNET, 3/8 SQ	1
3	174419	SENSOR, SMART SHAFT	1
4	5K262	SCREW,RD HD MACH #8-32X1-1/4	2
5	1-861-010032-02	WASHER,FL #8 ZP/CD	2
6	234115	NUT,FLANGE NY-LOK #8-32	2
7	234484	MOUNT, SENSOR, 6.0 SPACING	1
8	1C357	SCREW MACH HD 1/4-20NCX3/4	2
9	1-861-010032-06	WASHER, FLAT 1/4 N ZP/CD	2
10	1-861-010034-09	WASHER, LKG HLCL SPR, 1/4	2
11	1-512-010005-01	NUT,HEX,SLFLKG GRB 1/4-20	2

Brillion Elite Mini Monitor - SSBP12 Rear Seed Box Seed Shaft Sensor

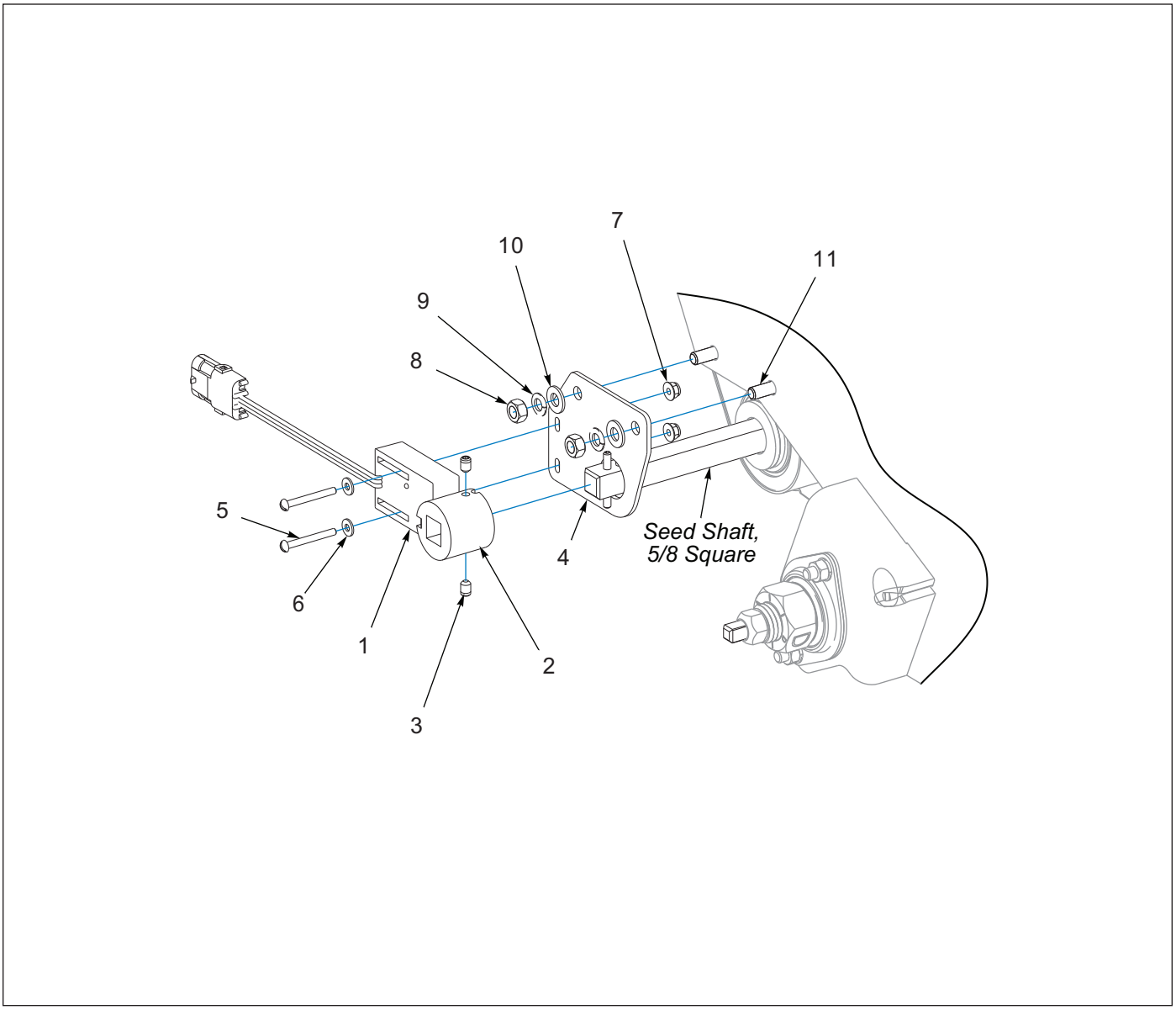

Figure 1-29: Brillion Elite Mini Monitor - SSBP12 Rear Seed Box Seed Shaft Sensor

Brillion Elite Mini Monitor - SSBP12 Rear Seed Box Seed Shaft Sensor

ITEM	PART NUMBER	DESCRIPTION	QTY
1	174419	SENSOR, SMART SHAFT	1
2	185978	MAGNET MNT ASM,BROME SHAFT	1
3	124032	SCREW SETHXSKTFTPT1/4-20X3/8Z	2
4	234194	PLATE, RETAINER W/SENSOR	1
5	5K262	SCREW,RD HD MACH #8-32X1-1/4	2
6	1-861-010032-02	WASHER,FL #8 ZP/CD	2
7	234115	NUT,FLANGE NY-LOK #8-32	2
8	1-512-010007-06	NUT, HEX 5/16-18 GR2 ZP	2
9	1-861-010034-10	WASHER,LKG 5/16	2
10	1-861-010032-08	WASHER,FLAT 5/16 N ZP	2
11	1-654-010049-08	SCREW,HX CP,5/16-18UNCX1-3/4	2

Brillion Elite Mini Monitor - SSBP12 Front Seed Box Bin Level Sensor

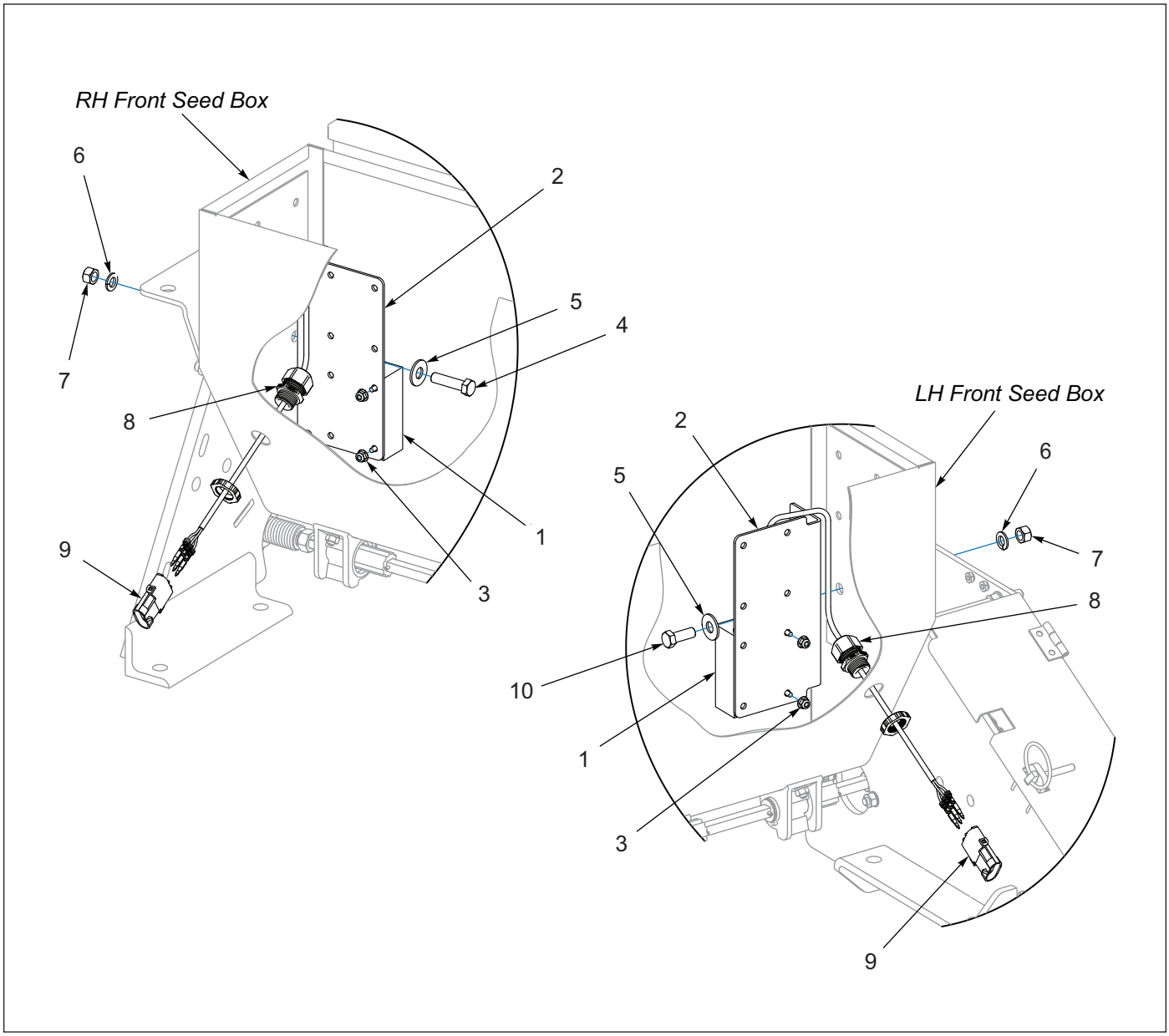

Figure 1-30: Brillion Elite Mini Monitor - SSBP12 Front Seed Box Bin Level Sensor

Brillion Elite Mini Monitor - SSBP12 Front Seed Box Bin Level Sensor

ITEM	PART NUMBER	DESCRIPTION	QTY
1	174399	SENSOR, BIN LEVEL	2
2	233490	BRACKET, BIN LEVEL SENSOR	2
3	234115	NUT,FLANGE NY-LOK #8-32	4
4	1-654-010051-07	SCREW,HEX CAP,3/8-16UNCX1-1/2	1
5	1-861-010032-11	WASHER, FLAT 3/8 W ZP/CD	2
6	1-861-010034-11	WASHER, LKG HLCL SPR, 3/8	2
7	1-512-010007-07	NUT, HEX 3/8-16 GR2 ZP	2
8	234195	CORDGRIP,0.17-0.45XM20THRD	2
9	194841	SHROUD,3-PIN WEATHER PACK	2
10	1-654-010051-05	SCREW,HEX CAP 3/8-16UNCX1 GR5	1

Brillion Elite Mini Monitor - SSP112 Seed Shaft Sensor

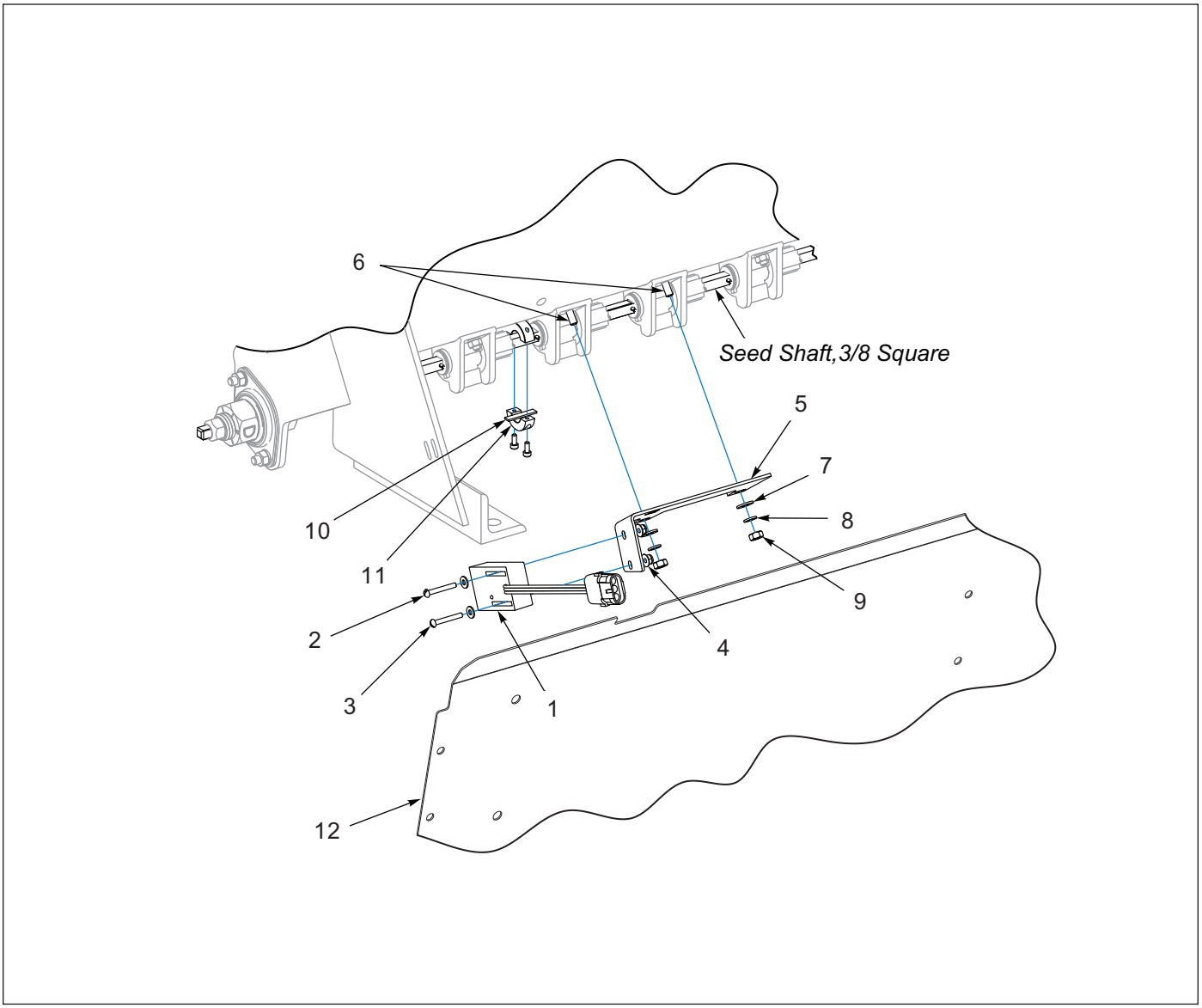

Figure 1-31: Brillion Elite Mini Monitor - SSP112 Seed Shaft Sensor

Brillion Elite Mini Monitor - SSP112 Seed Shaft Sensor

ITEM	PART NUMBER	DESCRIPTION	QTY
1	174419	SENSOR, SMART SHAFT	1
2	5K262	SCREW,RD HD MACH #8-32X1-1/4	2
3	1-861-010032-02	WASHER,FL #8 ZP/CD	2
4	234115	NUT,FLANGE NY-LOK #8-32	2
5	234485	MOUNT, SENSOR, 4.25 SPACING	1
6	1C357	SCREW MACH HD 1/4-20NCX3/4	2
7	1-861-010032-06	WASHER, FLAT 1/4 N ZP/CD	2
8	1-861-010034-09	WASHER, LKG HLCL SPR, 1/4	2
9	1-512-010007-05	NUT, HEX 1/4-20 GR2 ZP	2
10	234192	MAGNET,1-1/4 X 1/4 X 1/16	1
11	233496	COLLAR, MAGNET, 3/8 SQ	1
12	234197	FRONT DEFLECTOR, RH, SS112	1

Brillion Elite Mini Monitor - SSP112 Bin Level Sensor

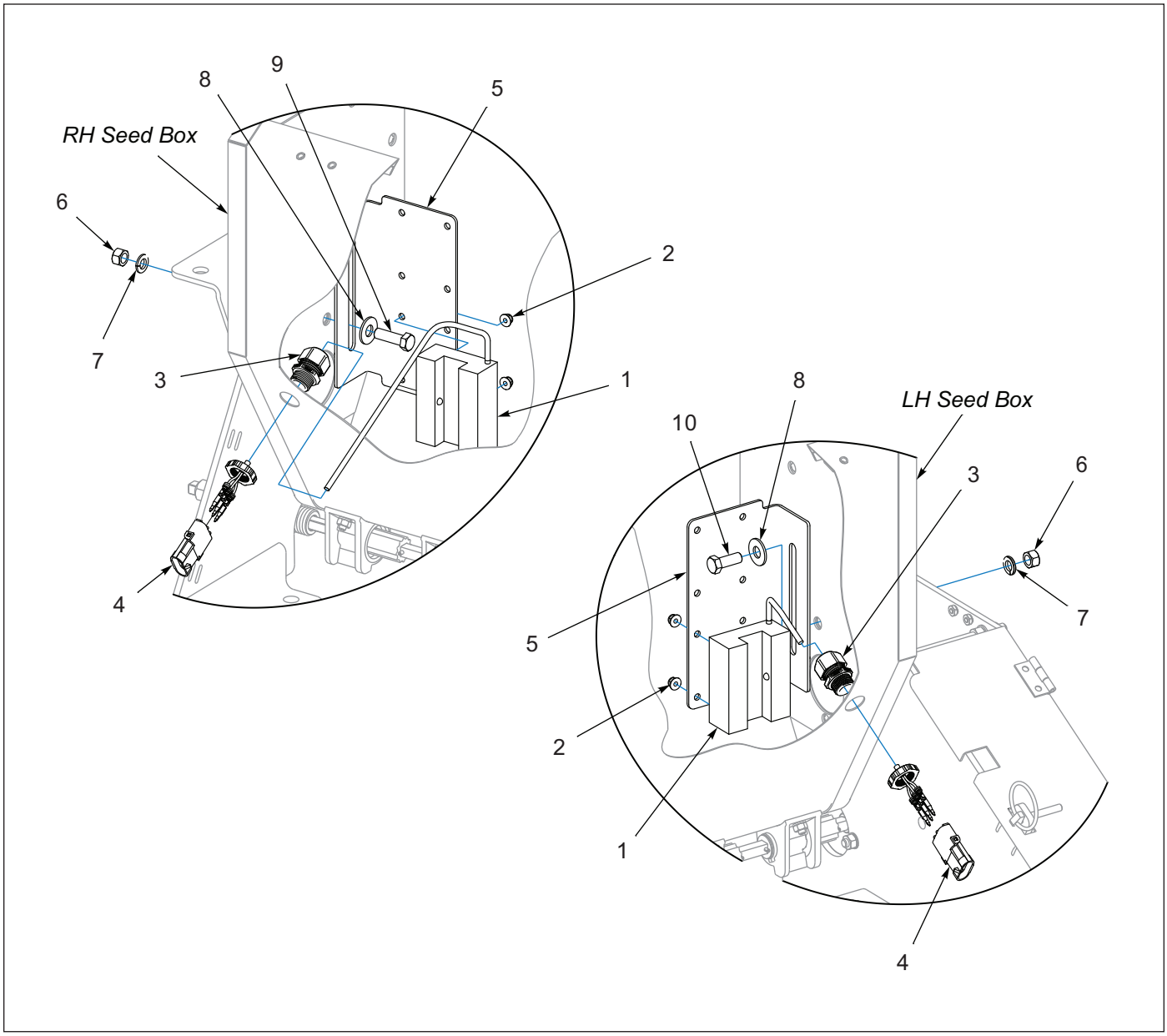

Figure 1-32: Brillion Elite Mini Monitor - SSP112 Bin Level Sensor

Brillion Elite Mini Monitor - SSP112 Bin Level Sensor

ITEM	PART NUMBER	DESCRIPTION	QTY
1	174399	SENSOR, BIN LEVEL	2
2	234115	NUT,FLANGE NY-LOK #8-32	4
3	234195	CORDGRIP,0.17-0.45XM20THRD	2
4	194841	SHROUD,3-PIN WEATHER PACK	2
5	233490	BRACKET, BIN LEVEL SENSOR	2
6	1-512-010007-07	NUT, HEX 3/8-16 GR2 ZP	2
7	1-861-010034-11	WASHER, LKG HLCL SPR, 3/8	2
8	1-861-010032-11	WASHER, FLAT 3/8 W ZP/CD	2
9	1-654-010051-06	SCREW,HEX CAP 3/8-16UNCX1-1/4	1
10	1-654-010051-05	SCREW,HEX CAP 3/8-16UNCX1 GR5	1

Brillion Elite Mini Monitor - SLP2121, SLP3121, SLPB2121 Front Seed Box Seed Shaft Sensor

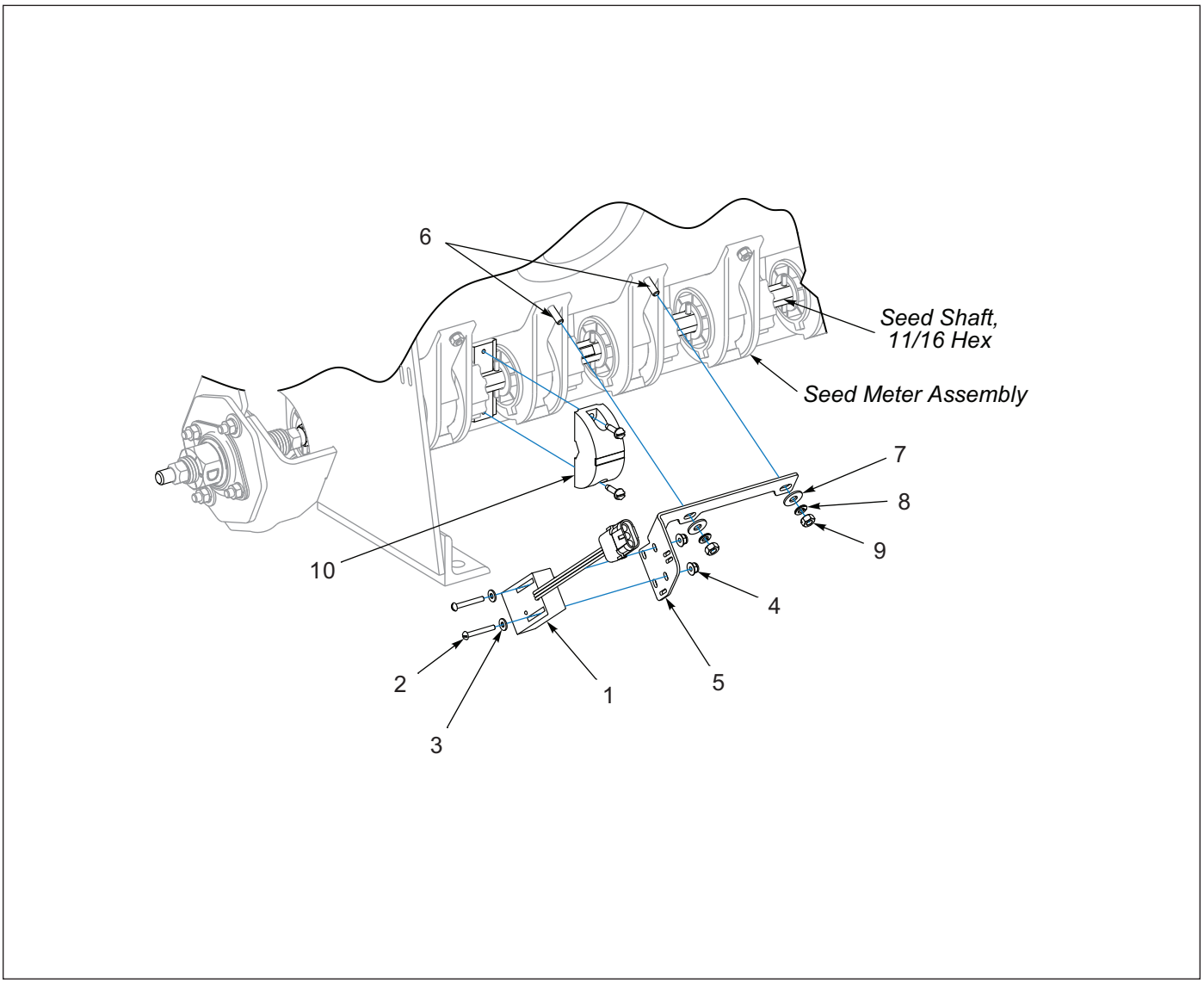

Figure 1-33: Brillion Elite Mini Monitor - SLP2121, SLP3121, SLPB2121 Front Seed Box Seed Shaft Sensor

Brillion Elite Mini Monitor - SLP2121, SLP3121, SLPB2121 Front Seed Box Seed Shaft Sensor

ITEM	PART NUMBER	DESCRIPTION	QTY
1	174419	SENSOR, SMART SHAFT	1
2	5K262	SCREW,RD HD MACH #8-32X1-1/4	2
3	1-861-010032-02	WASHER,FL #8 ZP/CD	2
4	234115	NUT,FLANGE NY-LOK #8-32	2
5	234488	MOUNT, SENSOR, 4.25 SP LGBX	1
6	108787	SCREW RD HD MACH 1/4-20X1	2
7	1-861-010032-06	WASHER, FLAT 1/4 N ZP/CD	2
8	1-861-010034-09	WASHER, LKG HLCL SPR, 1/4	2
9	1-512-010007-05	NUT, HEX 1/4-20 GR2 ZP	2
10	185985	MAGNET WHEEL ASM, 11/16 HEX	1

Brillion Elite Mini Monitor - SLBP2121 Rear Seed Box Seed Shaft Sensor

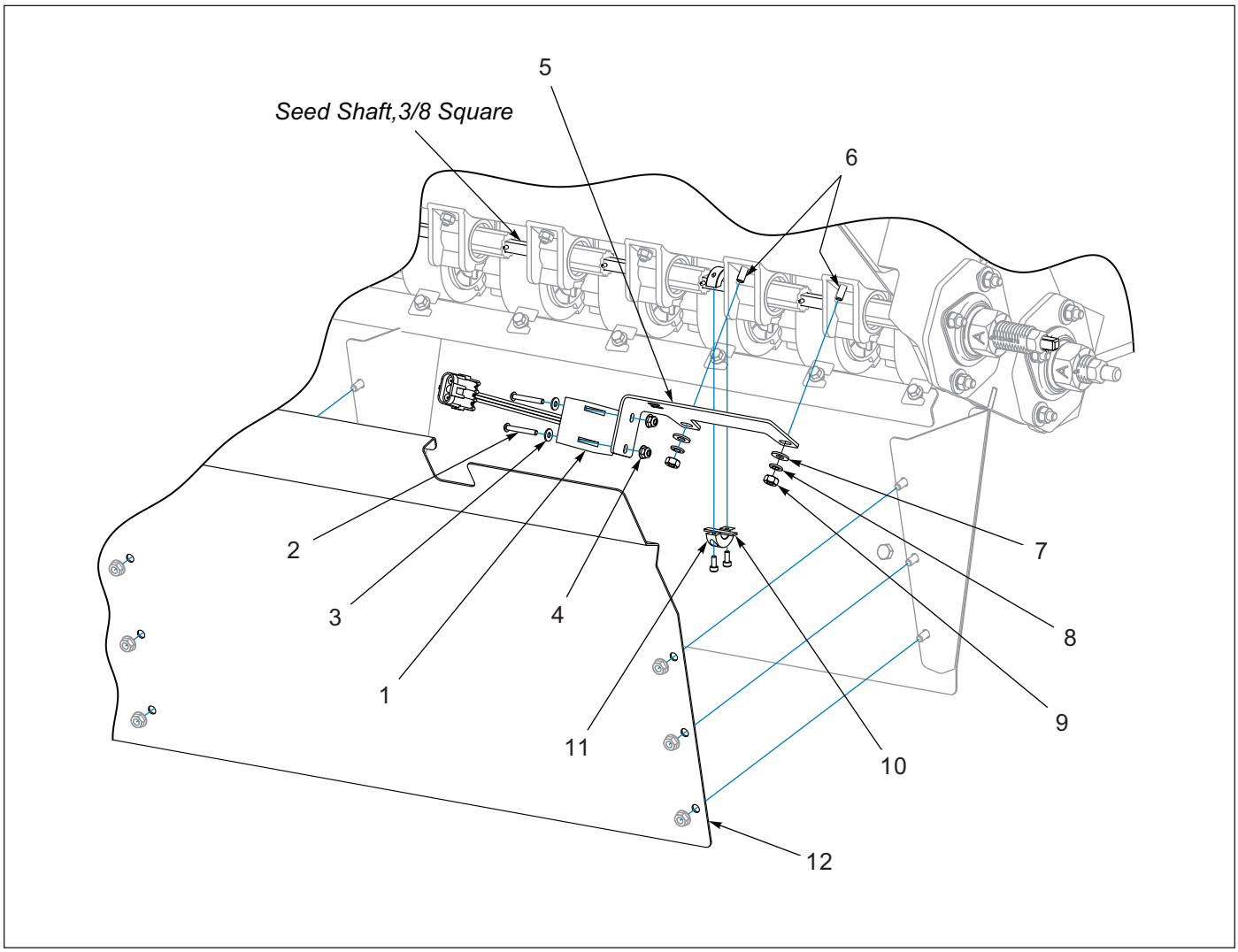

Figure 1-34: Brillion Elite Mini Monitor - SLBP2121 Rear Seed Box Seed Shaft Sensor

Brillion Elite Mini Monitor - SLBP2121 Rear Seed Box Seed Shaft Sensor

ITEM	PART NUMBER	DESCRIPTION	QTY
1	174419	SENSOR, SMART SHAFT	1
2	5K262	SCREW,RD HD MACH #8-32X1-1/4	2
3	1-861-010032-02	WASHER,FL #8 ZP/CD	2
4	234115	NUT,FLANGE NY-LOK #8-32	2
5	234485	MOUNT, SENSOR, 4.25 SPACING	1
6	1C357	SCREW MACH HD 1/4-20NCX3/4	2
7	1-861-010032-07	WASHER,FLAT 1/4 ZP	2
8	1-861-010034-09	WASHER, LKG HLCL SPR, 1/4	2
9	1-512-010007-05	NUT, HEX 1/4-20 GR2 ZP	2
10	234192	MAGNET,1-1/4 X 1/4 X 1/16	1
11	233496	COLLAR, MAGNET, 3/8 SQ	1
12	234196	REAR DEFLECTOR, RH SLB212	1

Brillion Elite Mini Monitor - SLP2121, SLBP2121 Front Seed Box Bin Level Sensor

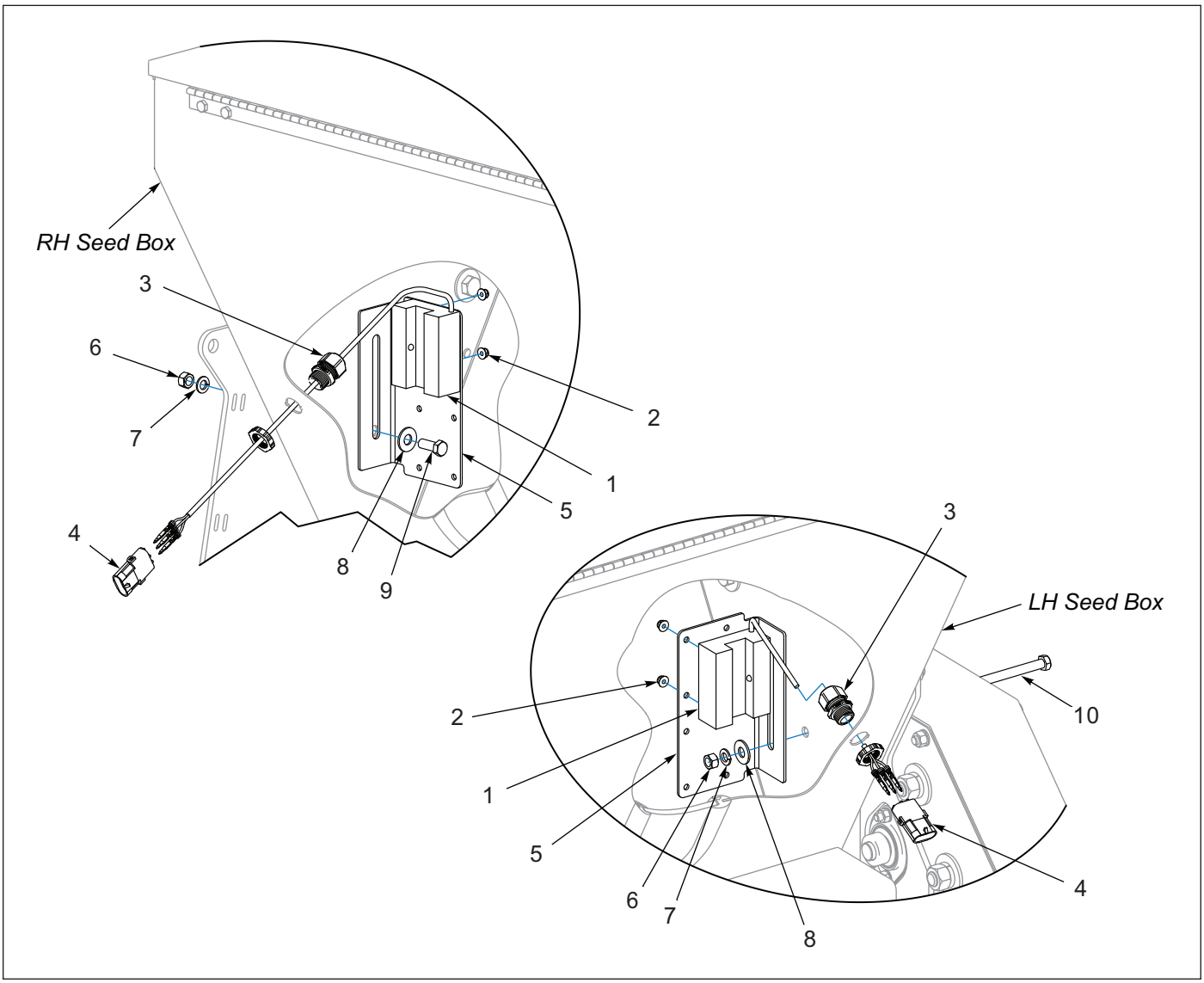

Figure 1-35: Brillion Elite Mini Monitor - SLP2121, SLBP2121 Front Seed Box Bin Level Sensor

Brillion Elite Mini Monitor - SLP2121, SLBP2121 Front Seed Box Bin Level Sensor

ITEM	PART NUMBER	DESCRIPTION	QTY
1	174399	SENSOR, BIN LEVEL	2
2	234115	NUT,FLANGE NY-LOK #8-32	4
3	234195	CORDGRIP,0.17-0.45XM20THRD	2
4	194841	SHROUD,3-PIN WEATHER PACK	2
5	233490	BRACKET, BIN LEVEL SENSOR	2
6	1-512-010007-07	NUT, HEX 3/8-16 GR2 ZP	1
7	1-861-010034-11	WASHER, LKG HLCL SPR, 3/8	1
8	1-861-010032-11	WASHER, FLAT 3/8 W ZP/CD	1
9	1-654-010051-05	SCREW,HEX CAP 3/8-16UNCX1 GR5	1
10	139603	SCREW HEX CAP 3/8-16X5-1/2GR5	1

Brillion Elite Mini Monitor - SLP3121 Front Seed Box Bin Level Sensor

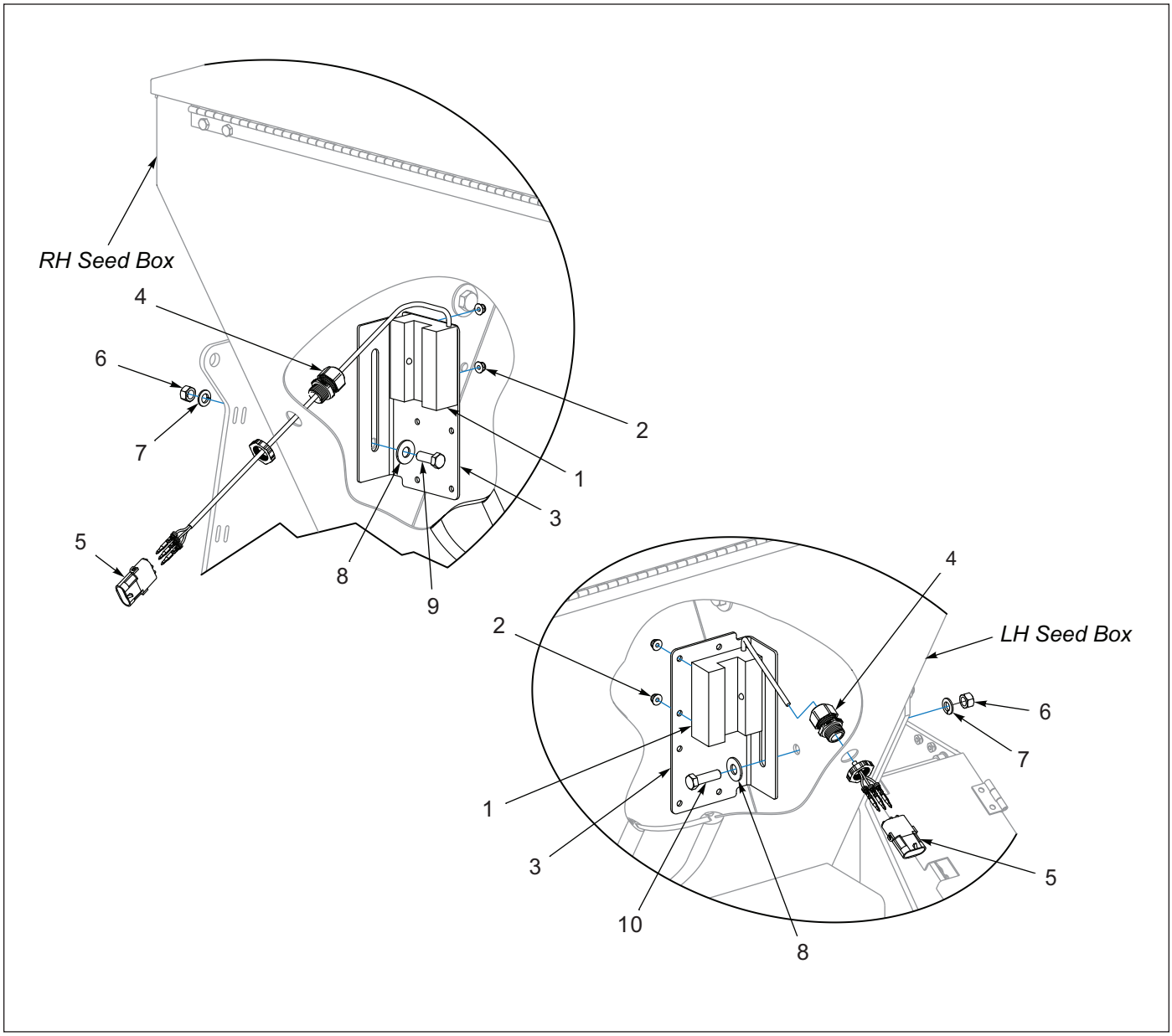

Figure 1-36: Brillion Elite Mini Monitor - SLP3121 Front Seed Box Bin Level Sensor

Brillion Elite Mini Monitor - SLP3121 Front Seed Box Bin Level Sensor

ITEM	PART NUMBER	DESCRIPTION	QTY
1	174399	SENSOR, BIN LEVEL	2
2	234115	NUT,FLANGE NY-LOK #8-32	4
3	233490	BRACKET, BIN LEVEL SENSOR	2
4	234195	CORDGRIP,0.17-0.45XM20THRD	2
5	194841	SHROUD,3-PIN WEATHER PACK	2
6	1-512-010007-07	NUT, HEX 3/8-16 GR2 ZP	1
7	1-861-010034-11	WASHER, LKG HLCL SPR, 3/8	1
8	1-861-010032-11	WASHER, FLAT 3/8 W ZP/CD	1
9	1-654-010051-05	SCREW,HEX CAP 3/8-16UNCX1 GR5	1
10	1-654-010051-06	SCREW,HEX CAP 3/8-16UNCX1-1/4	1

Brillion Elite Mini Monitor - SSP2121 Seed Shaft Sensor

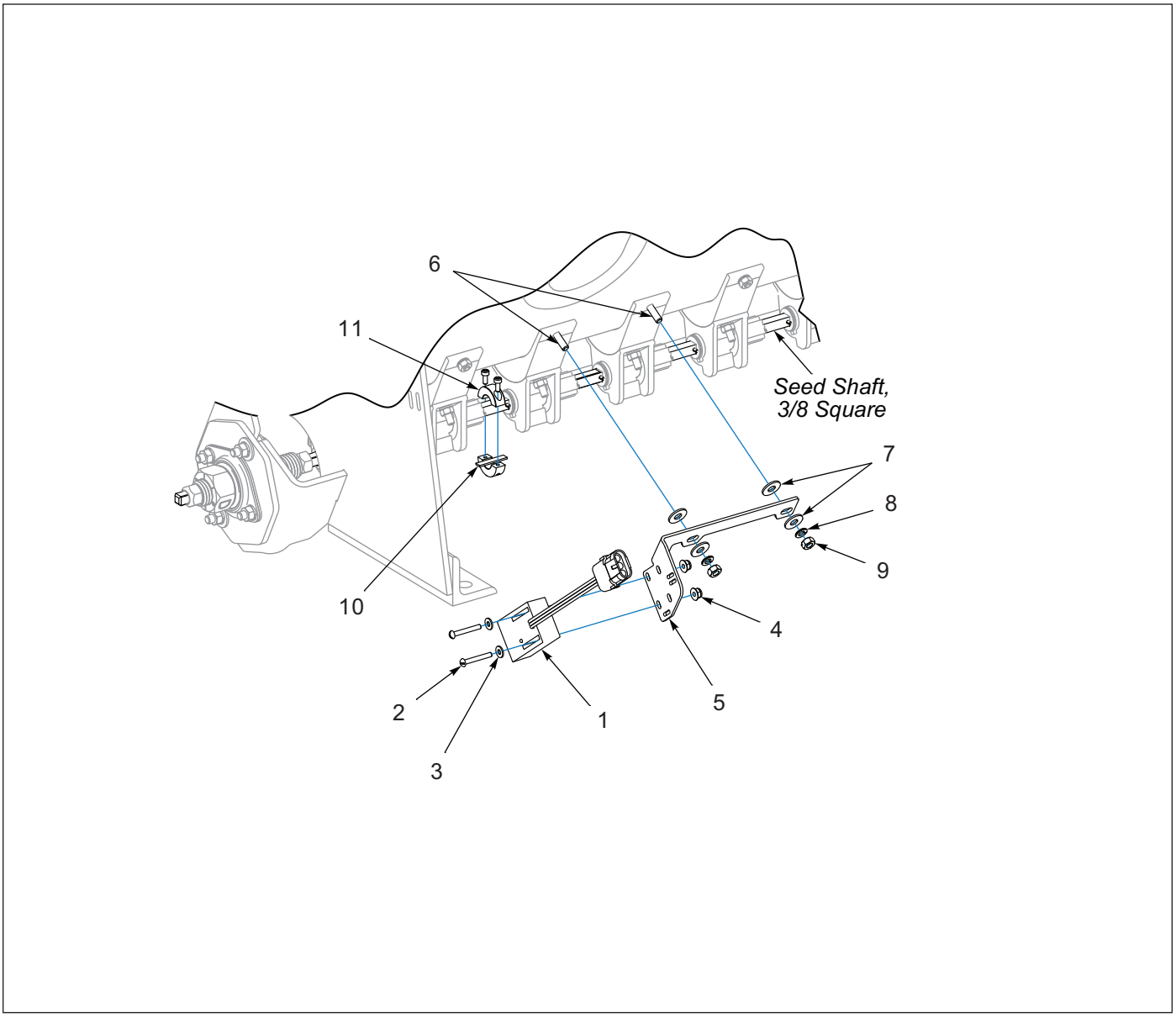

Figure 1-37: Brillion Elite Mini Monitor - SSP2121 Seed Shaft Sensor

Brillion Elite Mini Monitor - SSP2121 Seed Shaft Sensor

ITEM	PART NUMBER	DESCRIPTION	QTY
1	174419	SENSOR, SMART SHAFT	1
2	5K262	SCREW,RD HD MACH #8-32X1-1/4	2
3	1-861-010032-02	WASHER,FL #8 ZP/CD	2
4	234115	NUT,FLANGE NY-LOK #8-32	2
5	234488	MOUNT, SENSOR, 4.25 SP LGBX	1
6	108787	SCREW RD HD MACH 1/4-20X1	2
7	1-861-010032-07	WASHER,FLAT 1/4 ZP	4
8	1-861-010034-09	WASHER, LKG HLCL SPR, 1/4	2
9	1-512-010007-05	NUT, HEX 1/4-20 GR2 ZP	2
10	234192	MAGNET,1-1/4 X 1/4 X 1/16	1
11	233496	COLLAR, MAGNET, 3/8 SQ	1

Brillion Elite Mini Monitor - SSP2121 Bin Level Sensor

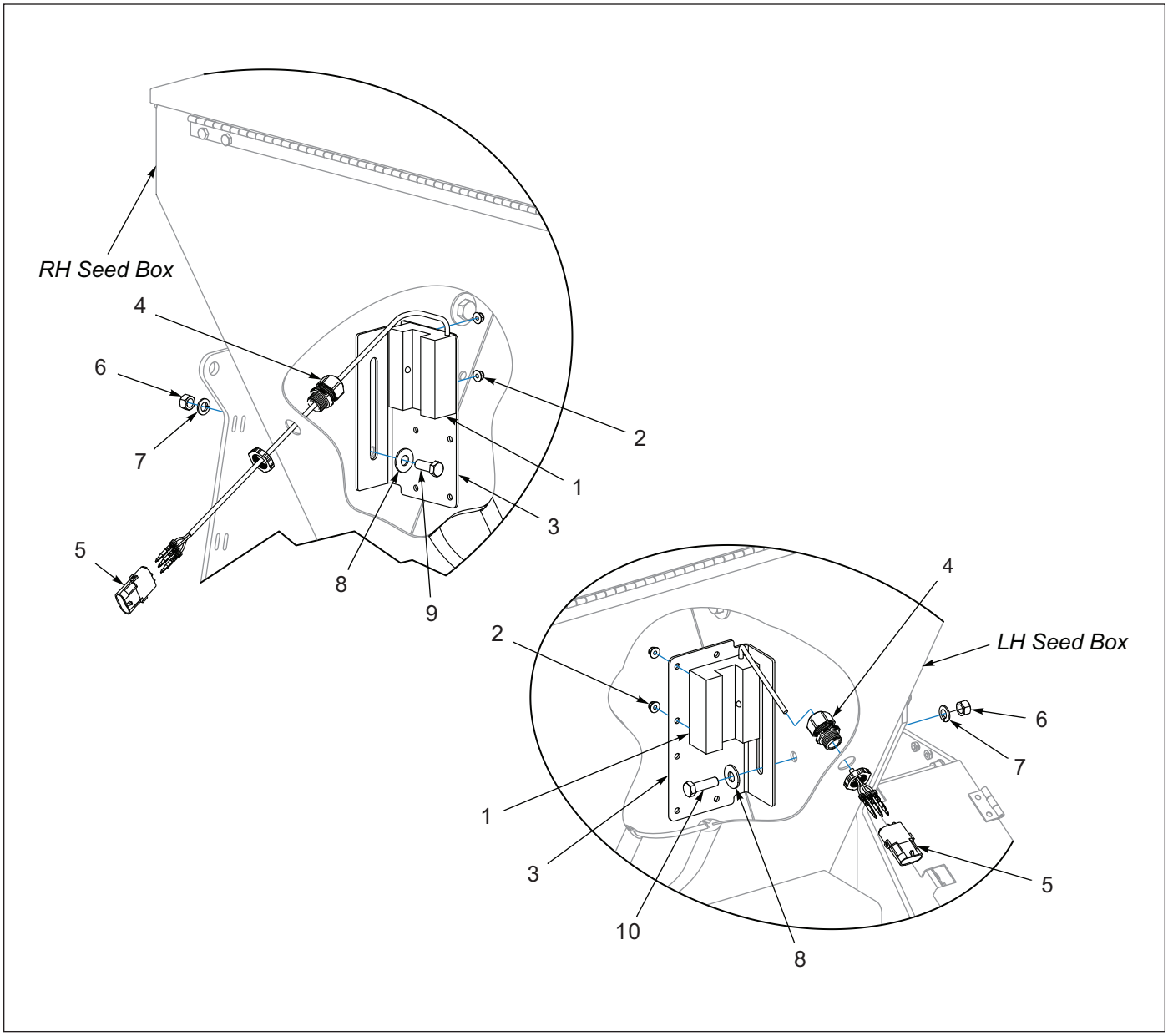

Figure 1-38: Brillion Elite Mini Monitor - SSP2121 Bin Level Sensor

Brillion Elite Mini Monitor - SSP2121 Bin Level Sensor

ITEM	PART NUMBER	DESCRIPTION	QTY
1	174399	SENSOR, BIN LEVEL	2
2	234115	NUT,FLANGE NY-LOK #8-32	4
3	233490	BRACKET, BIN LEVEL SENSOR	2
4	234195	CORDGRIP,0.17-0.45XM20THRD	2
5	194841	SHROUD,3-PIN WEATHER PACK	2
6	1-512-010007-07	NUT, HEX 3/8-16 GR2 ZP	1
7	1-861-010034-11	WASHER, LKG HLCL SPR, 3/8	1
8	1-861-010032-11	WASHER, FLAT 3/8 W ZP/CD	1
9	1-654-010051-05	SCREW,HEX CAP 3/8-16UNCX1 GR5	1
10	1-654-010051-06	SCREW,HEX CAP 3/8-16UNCX1-1/4	1

Brillion Elite Mini Monitor Tractor Mount

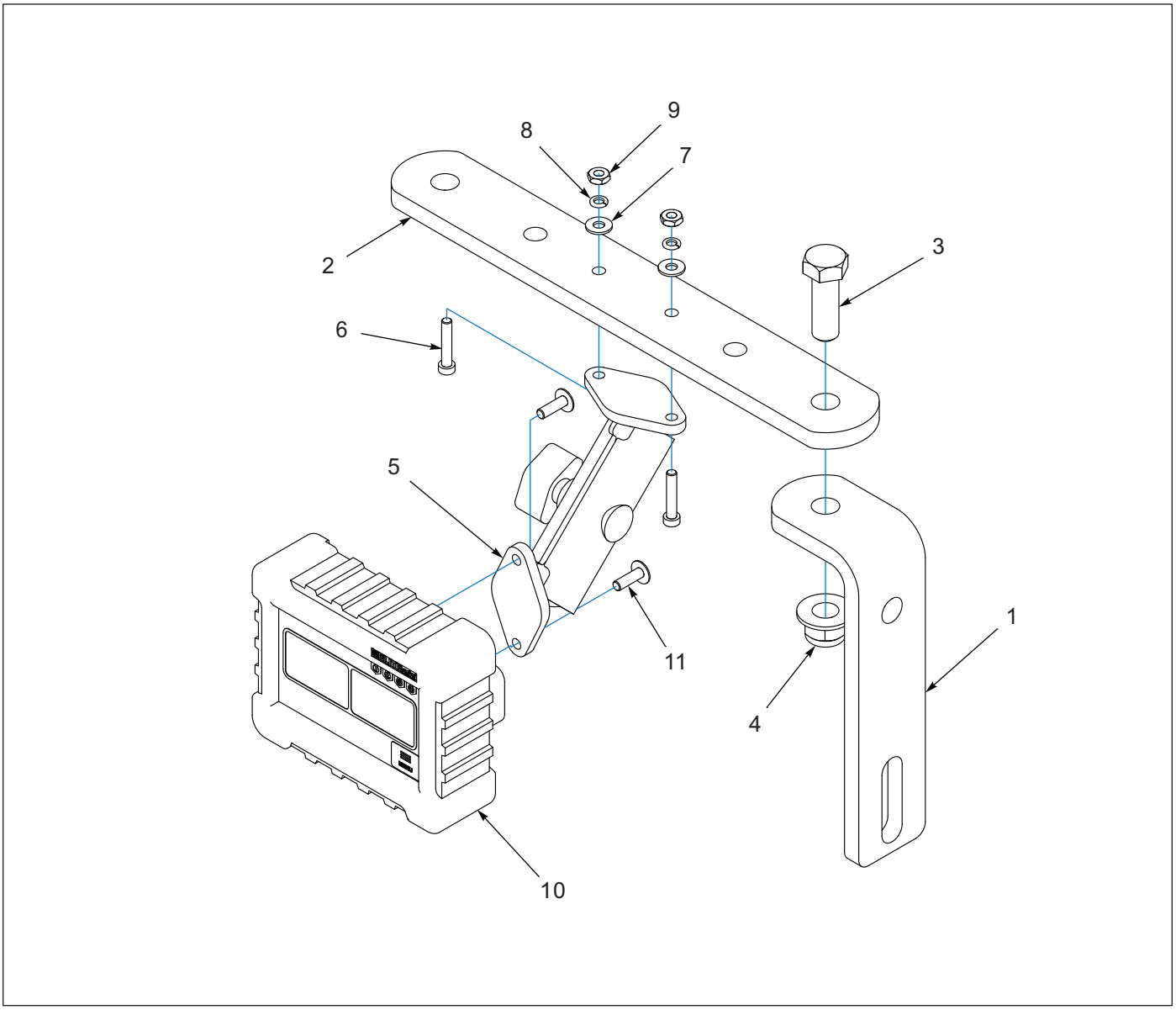

Figure 1-39: Brillion Elite Mini Monitor Tractor Mount

Brillion Elite Mini Monitor Tractor Mount

ITEM	PART NUMBER	DESCRIPTION	QTY
1	208527	ANGLE BRACKET,INTERFACE	1
2	208528	STRAIGHT BRACKET,INTERFACE	1
3	1-654-010055-03	SCREW,HEX CAP,1/2-13UNCX1-1/2	1
4	2P253	NUT, FLANGE NY-LOK 1/2-13	1
5	174434	MOUNT, LOUP II MONITOR	1
6	197150	SCREW MACK FILL #10-24X1, PHIL	2
7	1-861-010032-03	WASHER, FLAT #10 XP/CD	2
8	1-861-010034-07	WASHER,LKG,HLCL SPR, NO 10	2
9	1-512-010007-03	NUT, HEX 10-24 GR2 ZP	2
10	233483	MONITOR,BRILLION ELITE MINI	1
11	237780	SCREW, M5-0.8X16 FBHSC	2

Table provided for general use.

NOTES:

Console w/Clutch Control - Single Seed Box Electrical Schematic

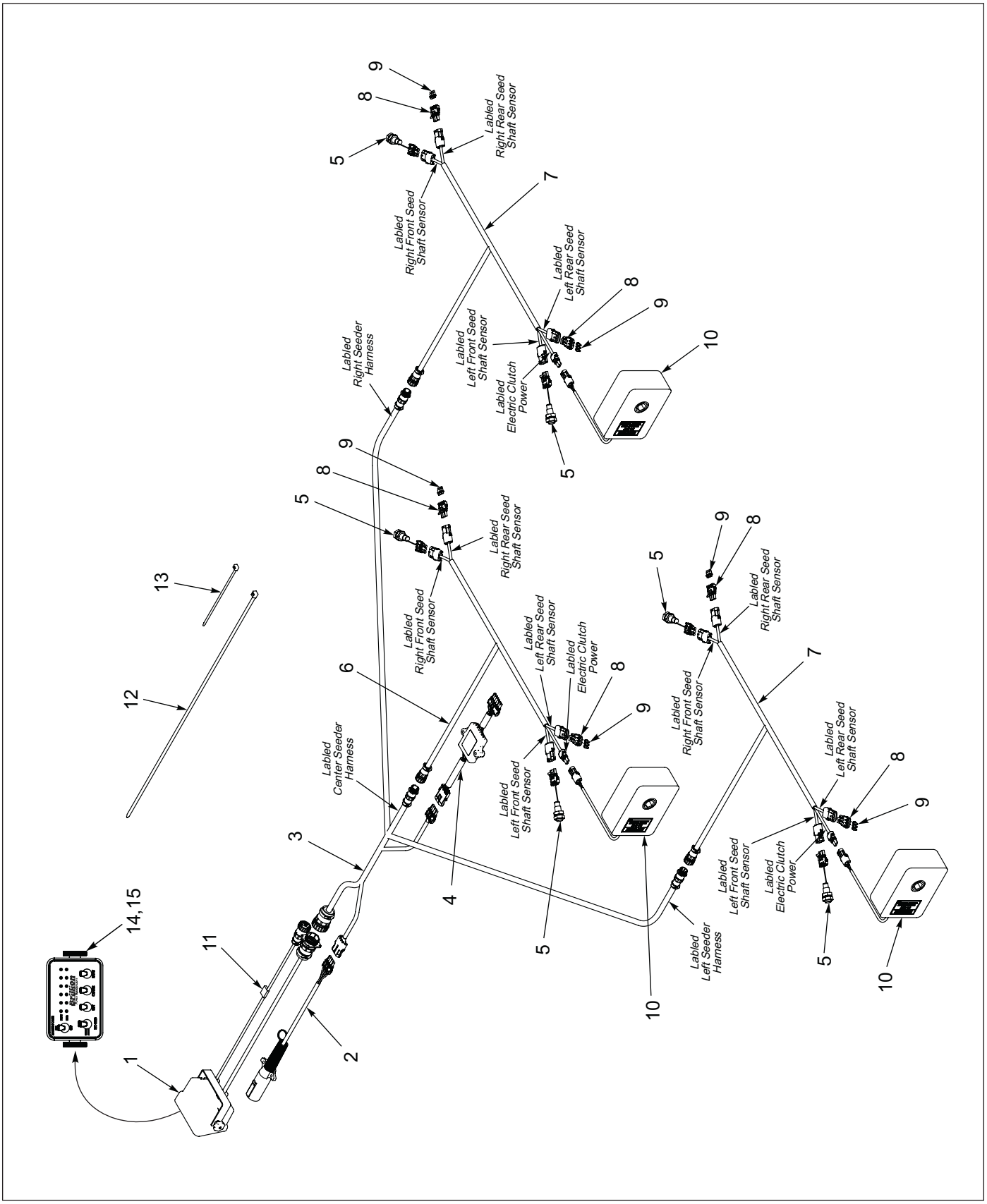

Figure 1-40: Console w/Clutch Control - Single Seed Box Electrical Schematic

Console w/Clutch Control - Single Seed Box Electrical Schematic

ITEM	PART NUMBER	DESCRIPTION	QTY
1	185979	CONSOLE, 4630 W/CLUTCH CTRL	1
2	178514	HARNESS, 7 PIN/4 PIN WP, 10'	1
3	185976	HARNESS, MAIN	1
4	174437	MODULE, AG FLASHER CONTROL **(PART OF SEEDER ASSEMBLY)**	1
5	185944	SENSOR SPEED SHAFT	6
6	185983	HARNESS, CENTER SEEDER **(SEE PAGE 1-70 AND 1-71)** **(HARNESS CONNECTORS CAN BE PURCHASED SEPARATELY)**	1
7	185975	HARNESS, WING SEEDER **(SEE PAGE 1-70 AND 1-71)** **(HARNESS CONNECTORS CAN BE PURCHASED SEPARATELY)**	2
8	4001294	TOWER, 3-PIN WEATHER PACK	6
9	151273	PLUG SEAL, CABLE CAVITY	18
10	4K956	ELECTRIC CLUTCH **(PART OF SEEDER ASSEMBLY)**	3
11	1415918	BLADE, FUSE 15A/80V AUTO TYPE	1
12	7K678	CABLE TIE	30
13	105-0228	TYWRAP 8IN LG TY-5272MX	30
14	207619	KNOB, RND 1/4-20 THRD	2
15	207620	STUD, WELD 1/4-20 X 5/8	2

Harness Connectors can be purchased separately. **(SEE PAGE 1-70 AND 1-71)**

Console w/Clutch Control - Double Seed Box Electrical Schematic

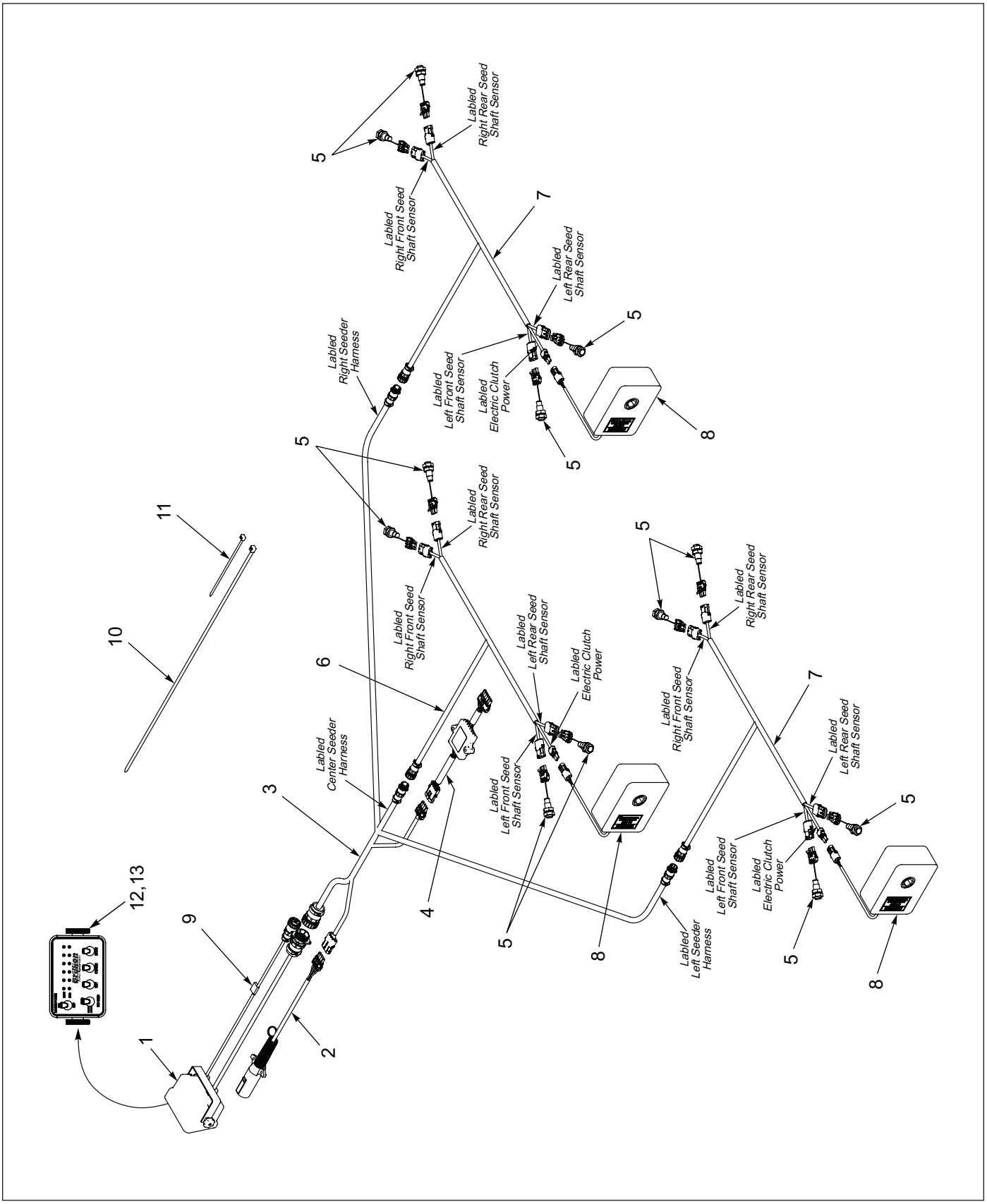

Figure 1-41: Console w/Clutch Control - Double Seed Box Electrical Schematic

Console w/Clutch Control - Double Seed Box Electrical Schematic

ITEM	PART NUMBER	DESCRIPTION	QTY
1	185979	CONSOLE, 4630 W/CLUTCH CTRL	1
2	178514	HARNESS, 7 PIN/4 PIN WP, 10'	1
3	185976	HARNESS, MAIN	1
4	174437	MODULE, AG FLASHER CONTROL **(PART OF SEEDER ASSEMBLY)**	1
5	185944	SENSOR SPEED SHAFT	6
6	185983	HARNESS, CENTER SEEDER **(SEE PAGE 1-70 AND 1-71)** **(HARNESS CONNECTORS CAN BE PURCHASED SEPARATELY)**	1
7	185975	HARNESS, WING SEEDER **(SEE PAGE 1-70 AND 1-71)** **(HARNESS CONNECTORS CAN BE PURCHASED SEPARATELY)**	2
8	4K956	ELECTRIC CLUTCH **(PART OF SEEDER ASSEMBLY)**	3
9	1415918	BLADE, FUSE 15A/80V AUTO TYPE	1
10	7K678	CABLE TIE	30
11	105-0228	TYWRAP 8IN LG TY-5272MX	30
12	207619	KNOB, RND 1/4-20 THREAD	2
13	207620	STUD, WELD 1/4-20 X 5/8	2

Harness Connectors can be purchased separately. **(SEE PAGE 1-70 AND 1-71)**

Console w/Clutch Control - SSBP12 Front Seed Box Seed Shaft Sensor

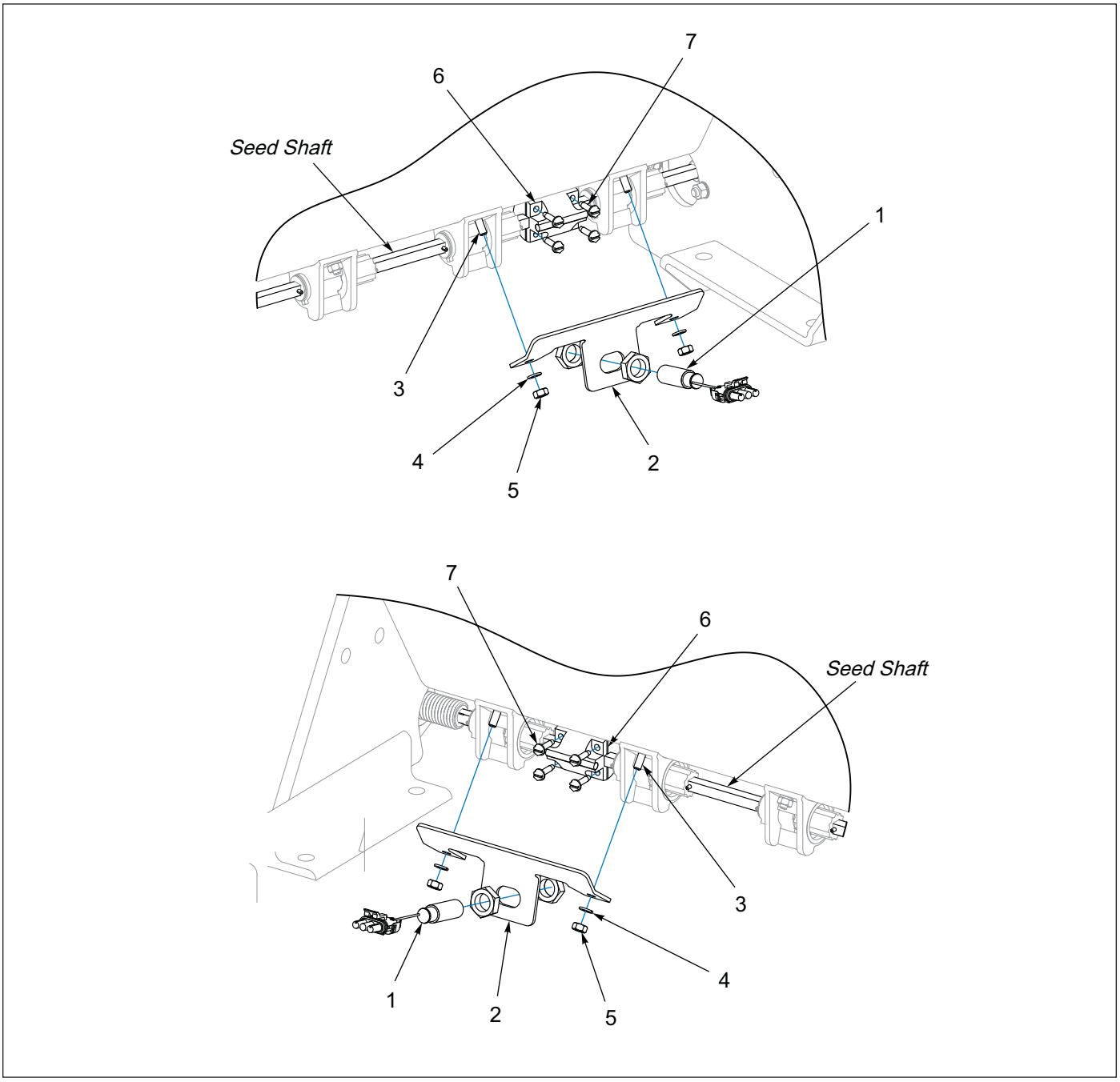

Figure 1-42: Console w/Clutch Control - SSBP12 Front Seed Box Seed Shaft Sensor

Console w/Clutch Control - SSBP12 Front Seed Box Seed Shaft Sensor

ITEM	PART NUMBER	DESCRIPTION	QTY
1	185944	SENSOR, SEED SHAFT	2
2	185950	BRACKET, SHAFT SENSOR	2
3	1C357	SCREW, MACH HD 1/4-20NC X 3/4	4
4	1-861-010034-09	WASHER, LKG HLCL SPR, 1/4	4
5	1-512-010007-05	NUT, HEX 1/4-20	4
6	185989	MAGNET WHL ASM, 2-3/8 SQ SHAFT	2
7	172935	SCREW, 10-24 X 3/4, HH SELF TAPPING	8

Console w/Clutch Control - SSBP12 Rear Seed Box Seed Shaft Sensor

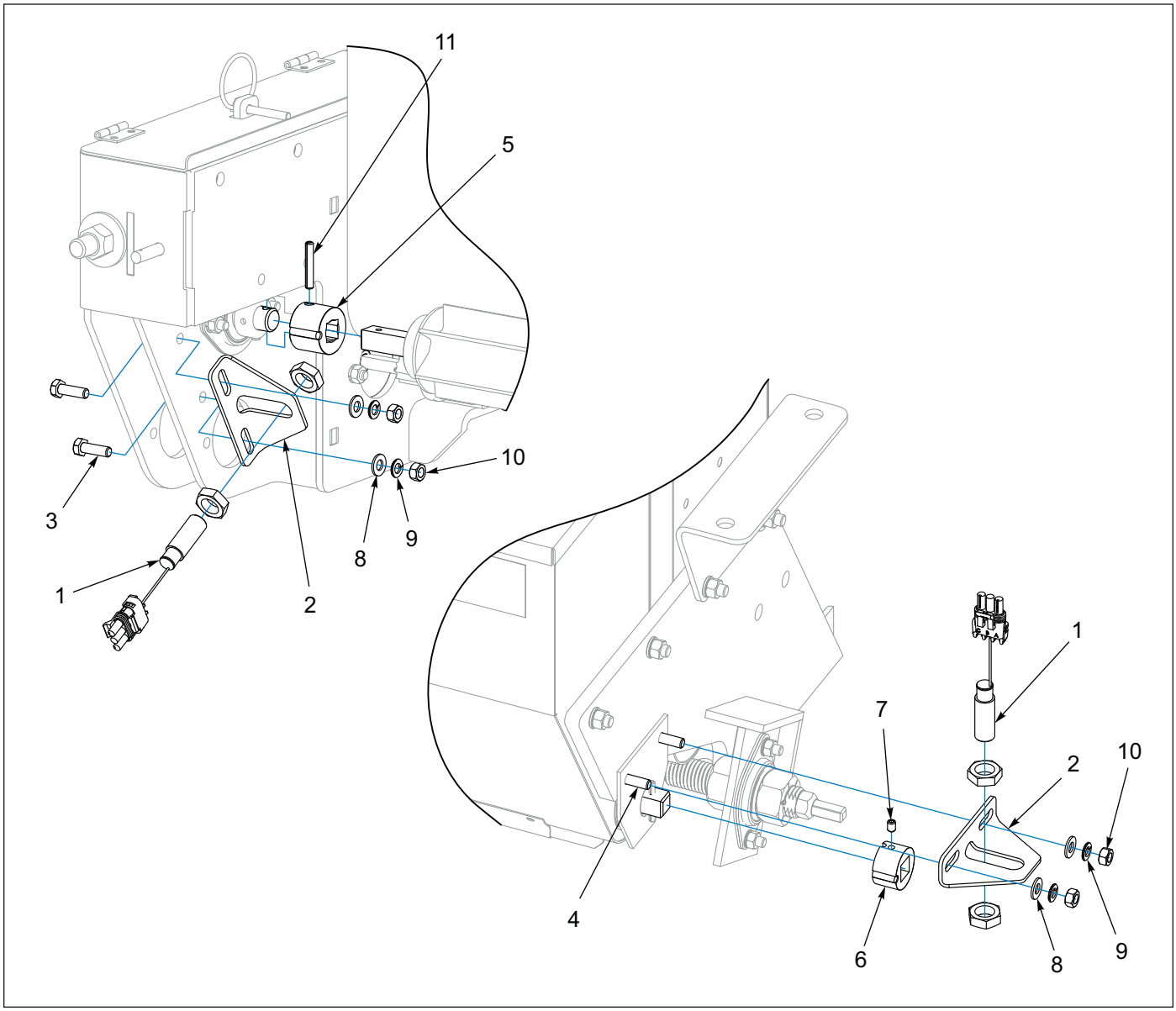

Figure 1-43: Console w/Clutch Control - SSBP12 Rear Seed Box Seed Shaft Sensor

Console w/Clutch Control - SSBP12 Rear Seed Box Seed Shaft Sensor

ITEM	PART NUMBER	DESCRIPTION	QTY
1	185944	SENSOR, SEED SHAFT	4
2	185943	BRACKET, SHAFT SENSOR	2
3	1-654-010049-05	SCREW, HX CP 5/16-18 X 1, GR5	2
4	1-654-010049-09	SCREW, HX CP 5/16-18 X 2, GR5	2
5	185982	COUPLING, W/MAGNET	1
6	185978	MAGNET MNT ASM, BROME SHAFT **(INCLUDES ITEM 7)**	1
7	124032	SCREW SETHXSKTFTPT1/4-20X3/8Z	1
8	1-861-010032-08	WASHER, FLAT 5/16, ZP	4
9	1-861-010034-10	WASHER, LKG 5/15	4
10	1-512-010007-06	NUT, HEX 5/16-18	4
11	1-647-010004217	SPRING PIN, SLOTTED 1/4 X 1-1/2	1

Console w/Clutch Control - SSP112 Seed Shaft Sensor

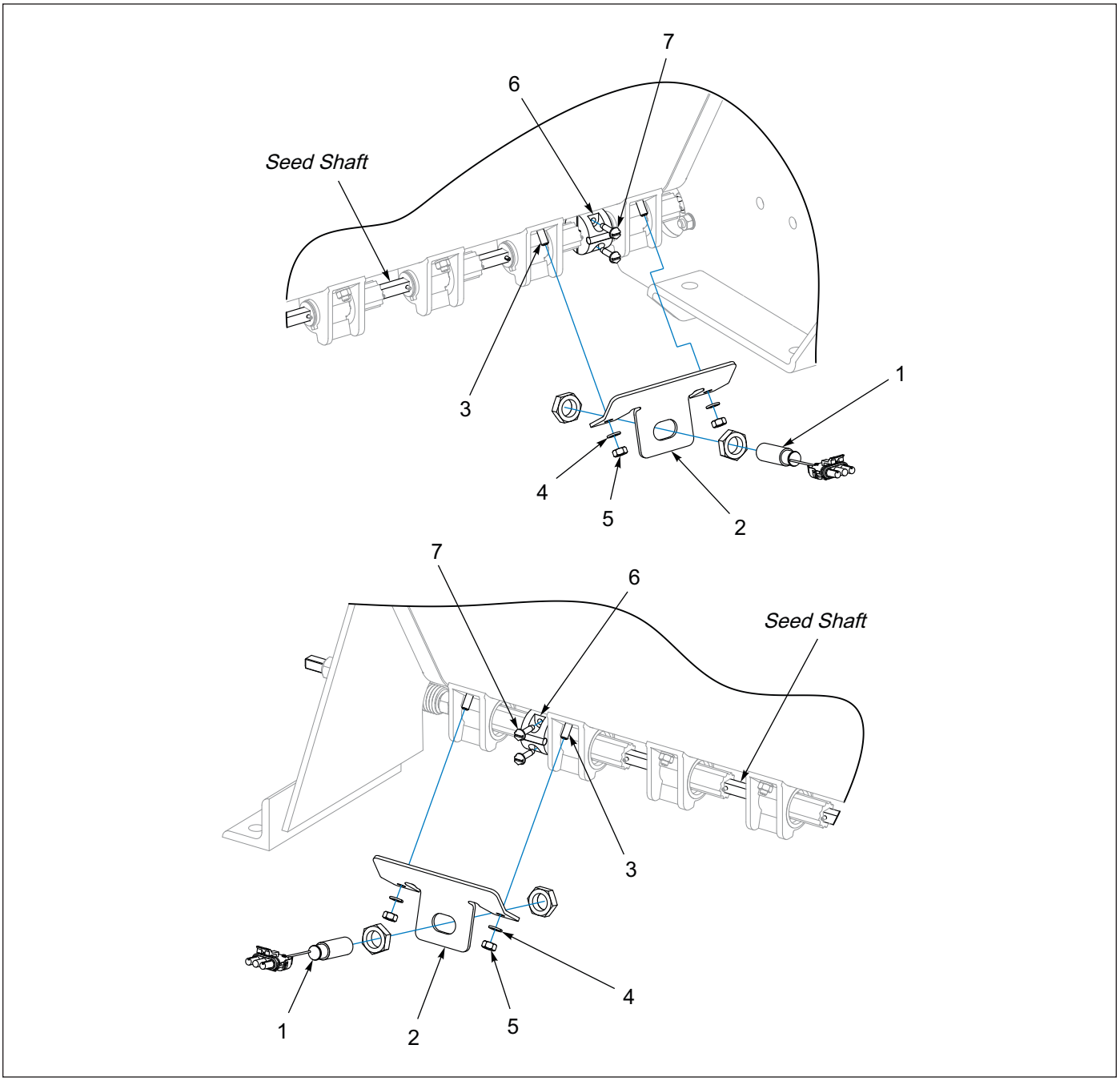

Figure 1-44: Console w/Clutch Control - SSP112 Seed Shaft Sensor

Console w/Clutch Control - SSP112 Seed Shaft Sensor

ITEM	PART NUMBER	DESCRIPTION	QTY
1	185944	SENSOR, SEED SHAFT	2
2	185946	BRACKET, SHAFT SENSOR	2
3	1C357	SCREW, MACH HD 1/4-20NC X 3/4	4
4	1-861-010034-09	WASHER, LKG HLCL SPR, 1/4	4
5	1-512-010007-05	NUT, HEX 1/4-20	4
6	185951	MAGNET WHL ASM, 1", 3/8 SQ SHAFT **(INCLUDES ITEM 7)**	1
7	172935	SCREW, 10-24 X 3/4, HH SELF TAPPING	2

Console w/Clutch Control - SLP2121, SLP3121 and SLBP2121 Front Seed Box Seed Shaft Sensor

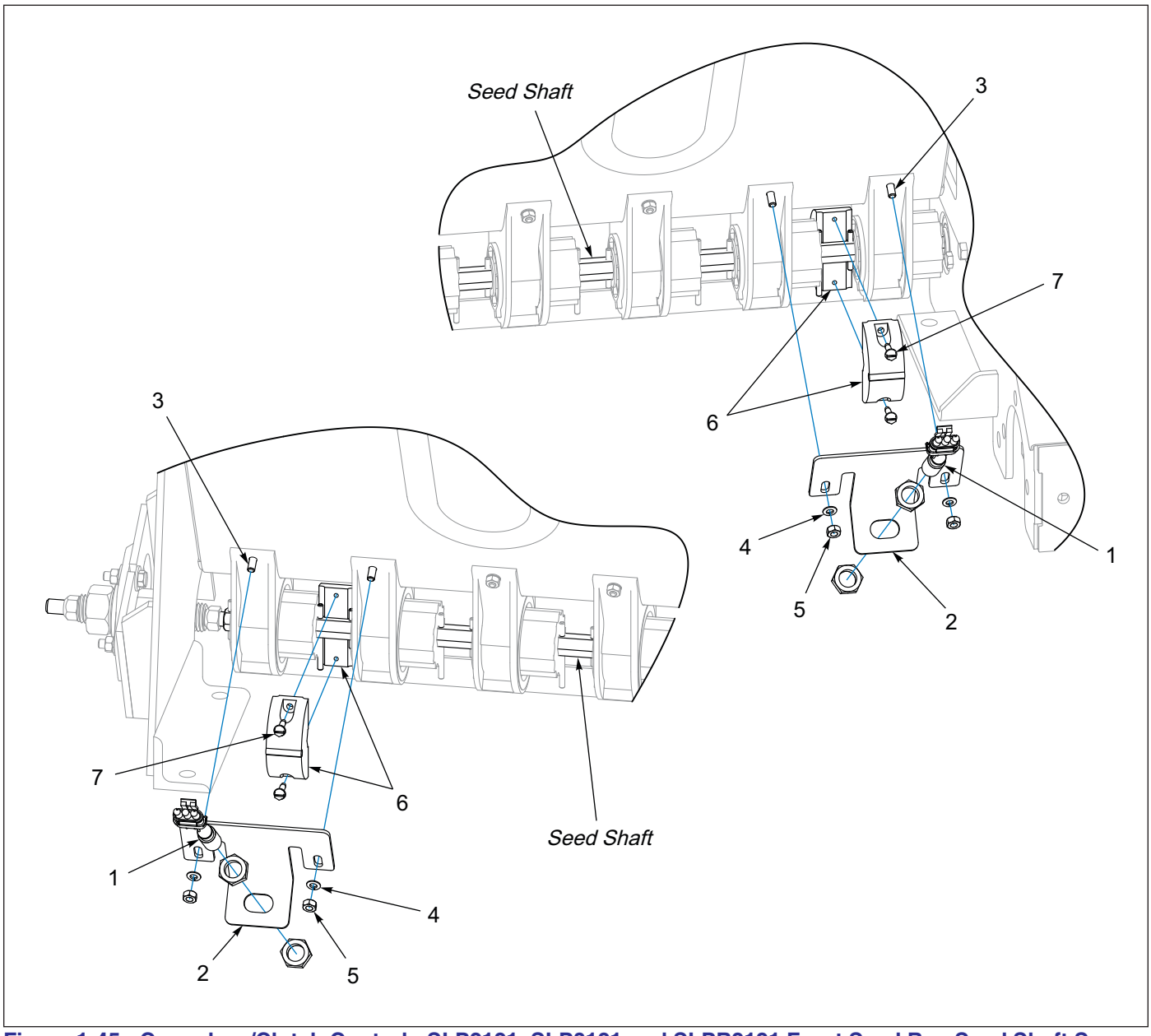

Figure 1-45: Console w/Clutch Control - SLP2121, SLP3121 and SLPB2121 Front Seed Box Seed Shaft Sensor

Console w/Clutch Control - SLP2121, SLP3121 and SLPB2121 Front Seed Box Seed Shaft Sensor

ITEM	PART NUMBER	DESCRIPTION	QTY
1	185944	SENSOR, SEED SHAFT	2
2	185948	BRACKET, SHAFT SENSOR, LARGE MTR	2
3	1C357	SCREW, MACH HD 1/4-20NC X 3/4	4
4	1-861-010034-09	WASHER, LKG HLCL SPR, 1/4	4
5	1-512-010007-05	NUT, HEX 1/4-20	4
6	185985	MAGNET WHL ASM, 11/16 HEX **(INCLUDES ITEM 7)**	2
7	172935	SCREW, 10-24 X 3/4, HH SELF TAPPING	2

Console w/Clutch Control - SLBP2121 Rear Seed Box Seed Shaft Sensor

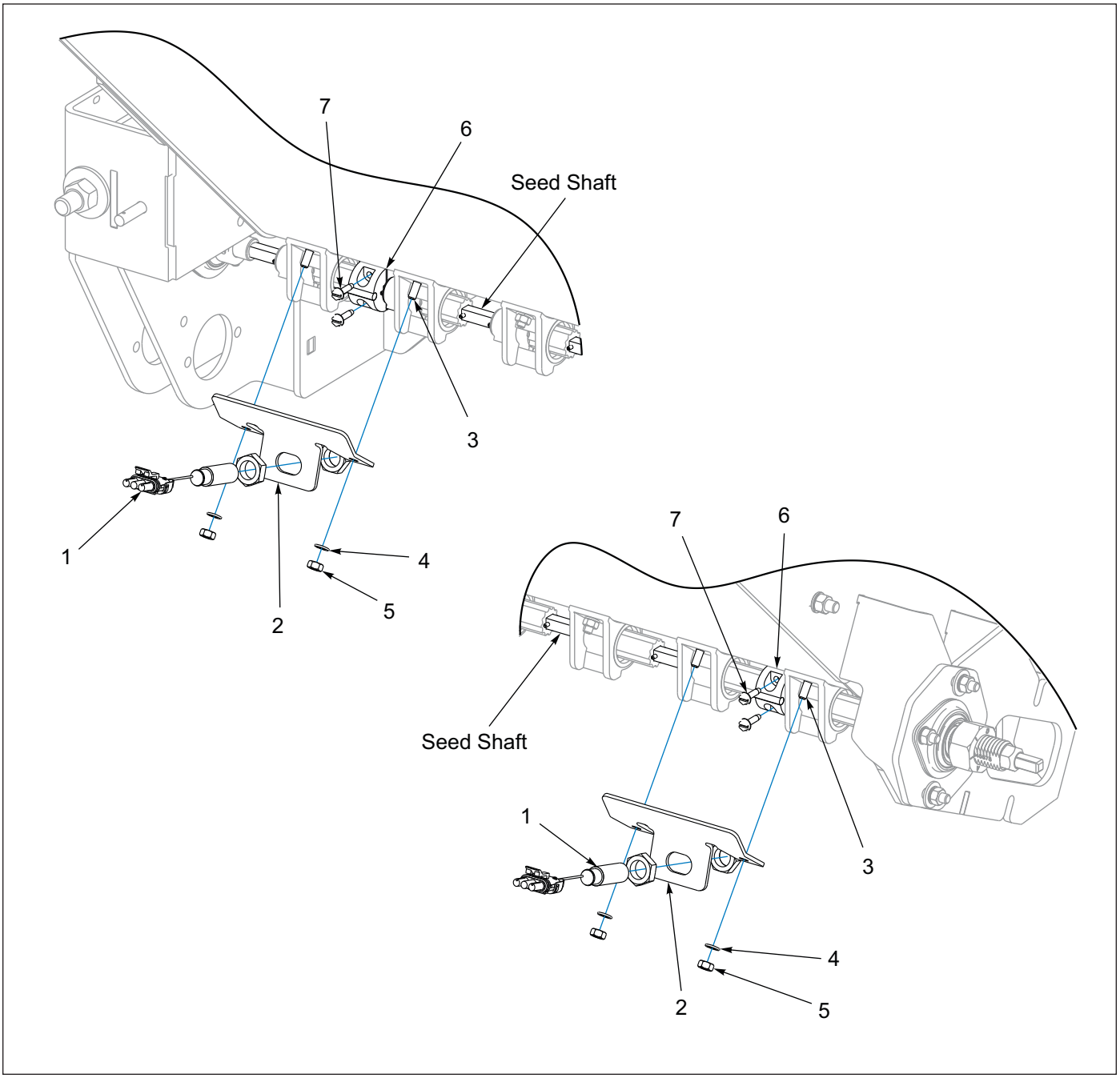

Figure 1-46: Console w/Clutch Control - SLBP2121 Rear Seed Box Seed Shaft Sensor

Console w/Clutch Control - SLBP2121 Rear Seed Box Seed Shaft Sensor

ITEM	PART NUMBER	DESCRIPTION	QTY
1	185944	SENSOR, SEED SHAFT	2
2	185946	BRACKET, SHAFT SENSOR	2
3	1C357	SCREW, MACH HD 1/4-20NC X 3/4	4
4	1-861-010034-09	WASHER, LKG HLCL SPR, 1/4	4
5	1-512-010007-05	NUT, HEX 1/4-20	4
6	185951	MAGNET WHL ASM 1", 3/8 SQ SHAFT **(INCLUDES ITEM 7)**	2
7	172935	SCREW, 10-24 X 3/4, HH SELF TAPPING	4

Console w/Clutch Control - SSP2121 Seed Shaft Sensor

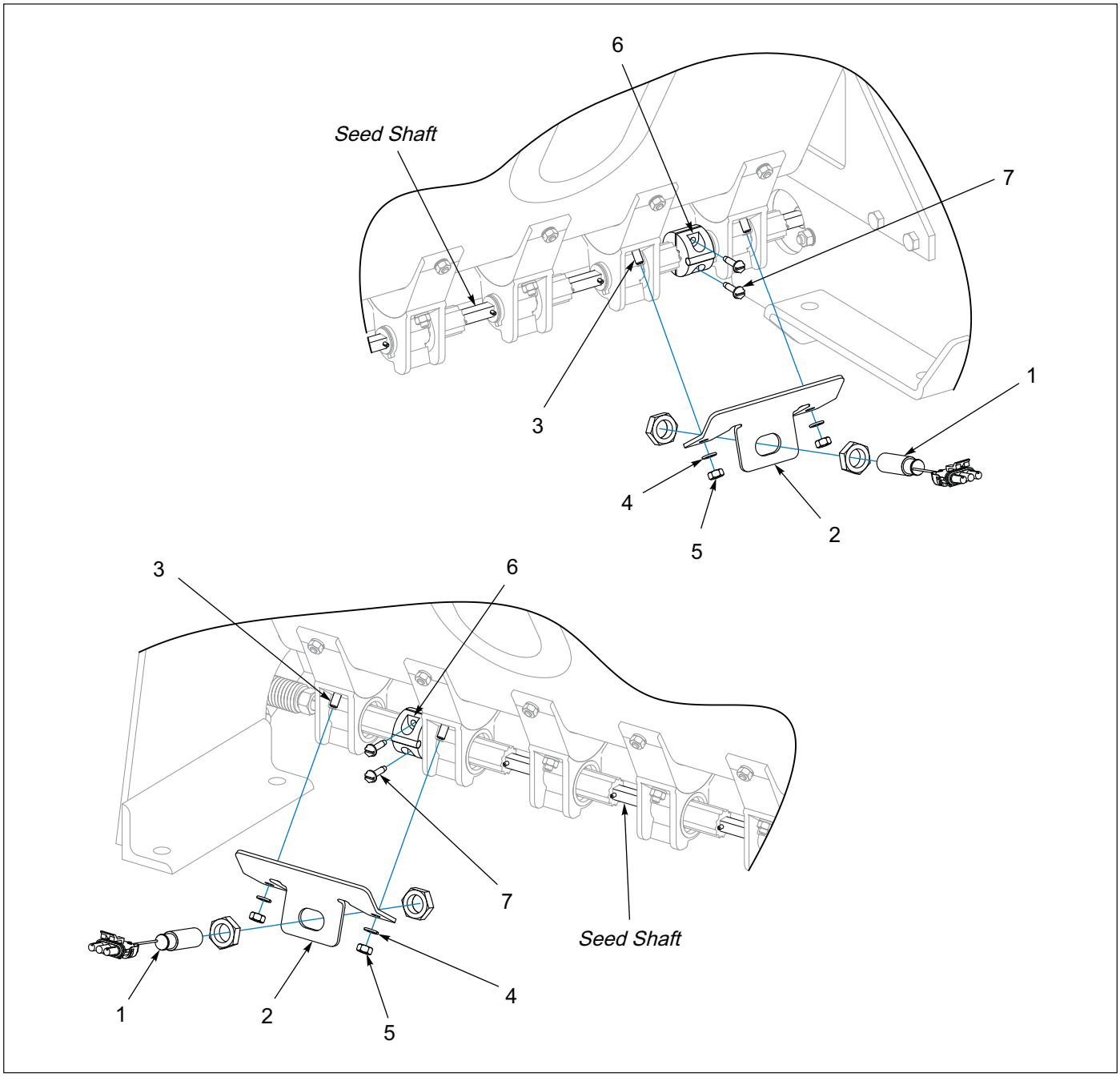

Figure 1-47: Console w/Clutch Control - SSP2121 Seed Shaft Sensor

Console w/Clutch Control - SSP2121 Seed Shaft Sensor

ITEM	PART NUMBER	DESCRIPTION	QTY
1	185944	SENSOR, SEED SHAFT	2
2	185946	BRACKET, SHAFT SENSOR	2
3	1C357	SCREW, RD HD MACH 1/4-20 X 3/4	4
4	1-861-010034-09	WASHER, LKG HLCL SPR, 1/4	4
5	1-512-010007-05	NUT, HEX 1/4-20	4
6	185951	MAGNET WHL ASM, 1", 3/8 SQ SHAFT **(INCLUDES ITEM 7)**	2
7	172935	SCREW, 10-24 X 3/4, HH SELF TAPPING	2

Console w/Clutch Control Tractor Mount

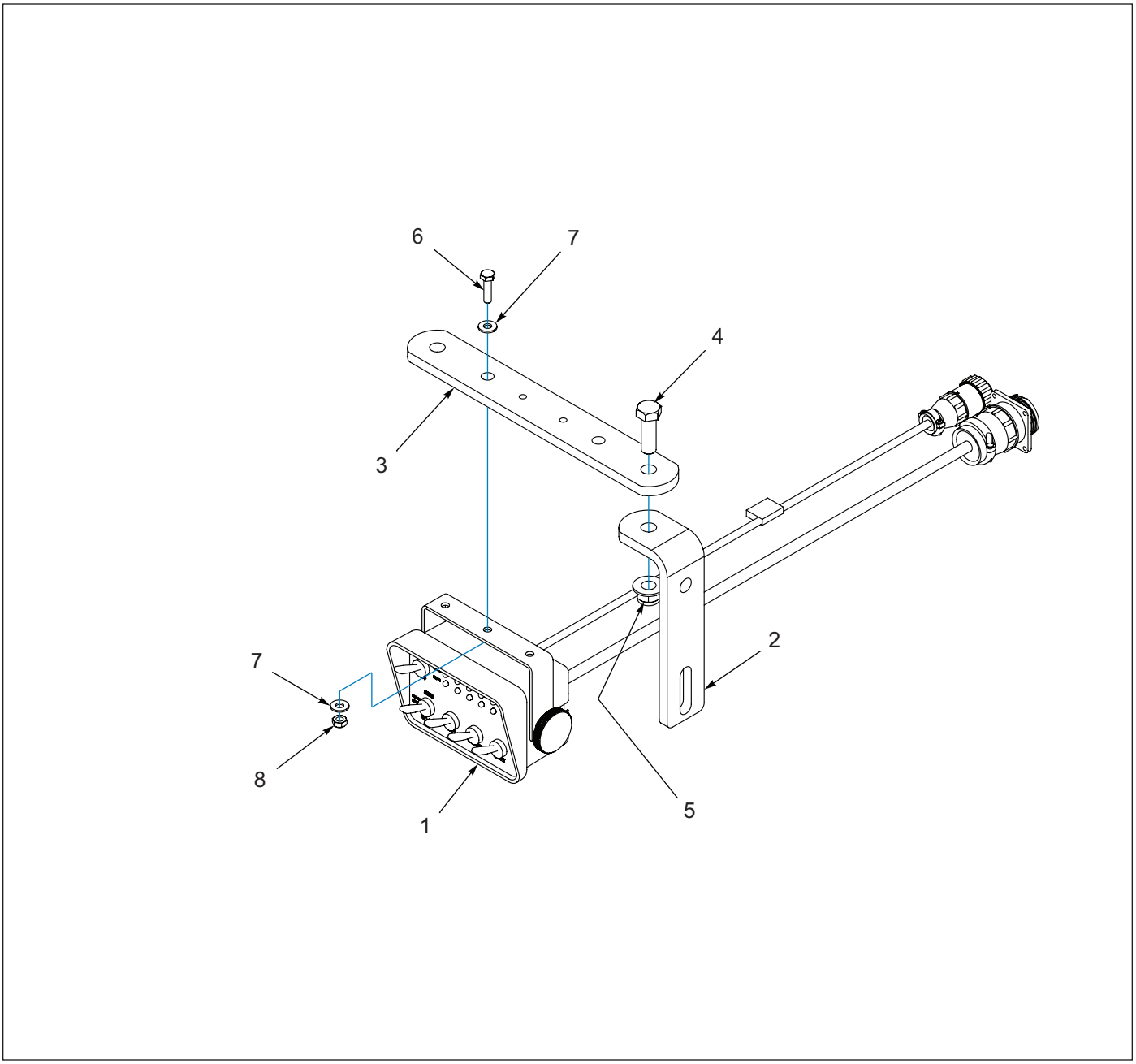

Figure 1-48: Console w/Clutch Control Tractor Mount

Console w/Clutch Control Tractor Mount

ITEM	PART NUMBER	DESCRIPTION	QTY
1	185979	CONSOLE, 4630 W/CLUTCH CTRL	1
2	208527	ANGLE BRACKET, INTERFACE	1
3	208528	STRAIGHT BRACKET, INTERFACE	1
4	1-654-010055-03	SCREW,HEX CAP,1/2-13UNCX1-1/2	1
5	2P253	NUT, FLANGE NY-LOK, 1/2-13	1
6	1-654-010047-06	SCREW,HX CP 1/4-20UNCX1 GR5	1
7	1-861-010032-06	WASHER, FLAT 1/4	2
8	1-512-010005-01	NUT, LOCK 1/4-20	1

Table provided for general use.

NOTES:

Weather Pack Connectors

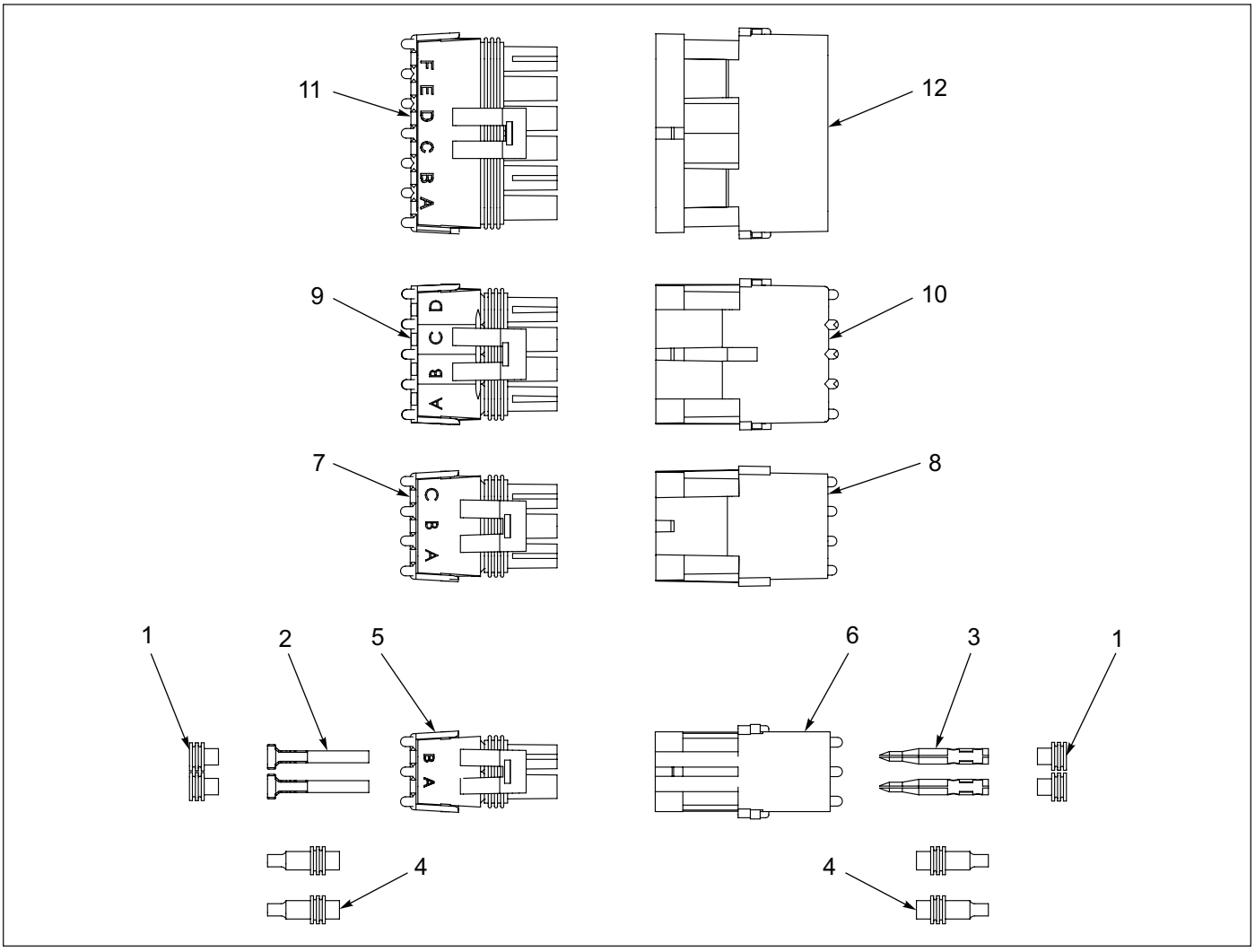

Figure 1-49: Weather Pack Connectors

Weather Pack Connectors

ITEM	PART NUMBER	DESCRIPTION	DELPHI P/N
1	154851	SEAL, CABLE WEATHER PACK	12015323
2	139974	TERMINAL, WP TOWER 16-14AWG	12124580
2	194840	TERMINAL, WP TOWER 20-18AWG	12089188
3	137654	TERMINAL, WP SHROUD 12-10AWG	12124587
3	4000671	TERMINAL, WP SHROUD 16-14AWG	12124582
3	122405	TERMINAL, WP SHROUD 20-18AWG	12089040
4	151273	PLUG SEAL, CABLE CAVITY	12010300
5	154852	TOWER, 2-PIN WEATHER PACK	12015792
6	122404	SHROUD, 2 PIN WEATHER PACK	12010973
7	4001294	TOWER, 3-PIN WEATHER PACK	12015793
8	194841	SHROUD, 3-PIN WEATHER PACK	12010717
9	166298	TOWER, 4-PIN WEATHER PACK	12015797
10	166297	SHROUD, 4-PIN WEATHER PACK	12010974
11	194904	TOWER, 6-PIN WEATHER PACK	12015799
12	194903	SHROUD, 6-PIN WEATHER PACK	12010975

AMP Connectors

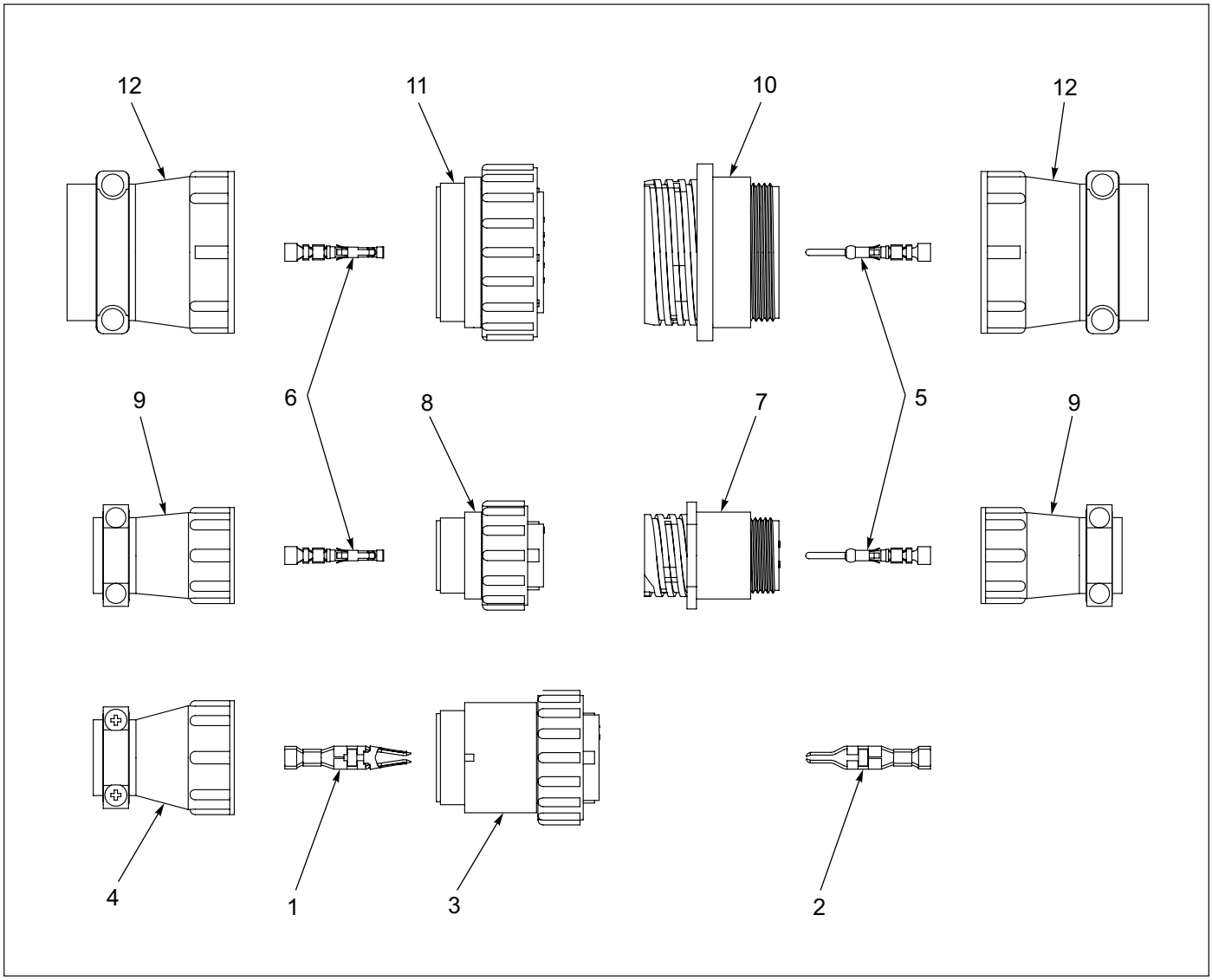

Figure 1-50: AMP Connectors

AMP Connectors

ITEM	PART NUMBER	DESCRIPTION	TE CONNECTIVITY PART NUMBER
1	194102	TERMINAL, POWER PLUG 16-12AWG	2-66740-1
2	194103	TERMINAL, POWER RECPT 16-12AWG	66261-5
3	194104	POWER PLUG ASM, 3-PIN, SIZE 17	206037-2
4	194105	BACKSHELL ASM, SIZE 17	206070-8
5	194745	TERMINAL, PIN 18-14AWG	1-66359-9
6	194744	TERMINAL, SOCKET 18-14AWG	1-66358-9
7	194106	RECEPTACLE, 9-PIN, SIZE 13	206705-2
8	194107	PLUG ASM, 9-PIN, SIZE 13	206708-1
9	194108	BACKSHELL ASM, SIZE 13	206966-7
10	194109	RECEPTACLE, 24-PIN, SIZE 23	206838-1
11	194110	PLUG ASM, 24-PIN, SIZE 23	206837-1
12	194111	BACKSHELL ASM, SIZE 23	206512-5

Hydraulic Cylinder and Manifold Installation

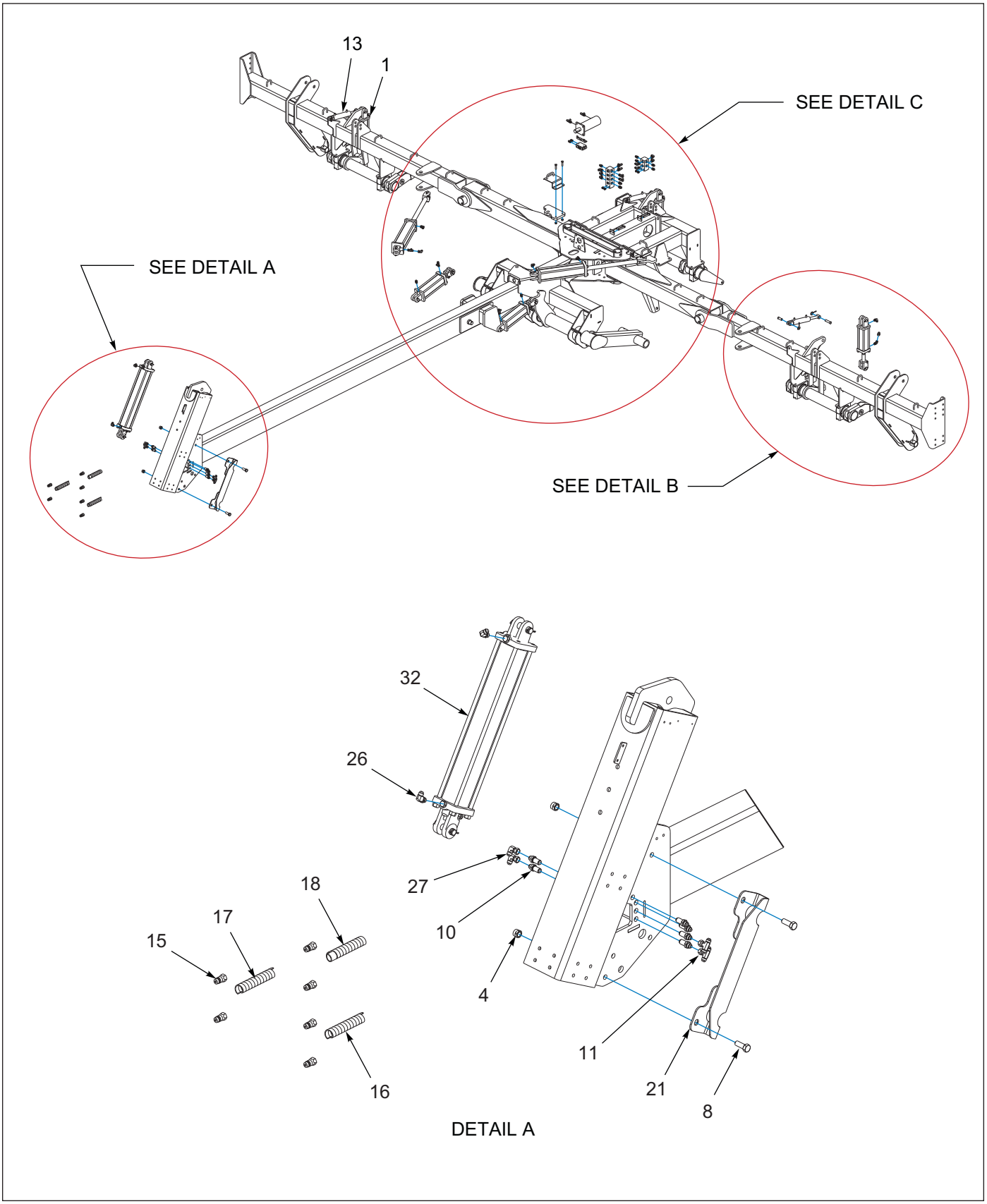

Figure 1-51: Hydraulic Cylinder and Manifold Installation (1 of 3)

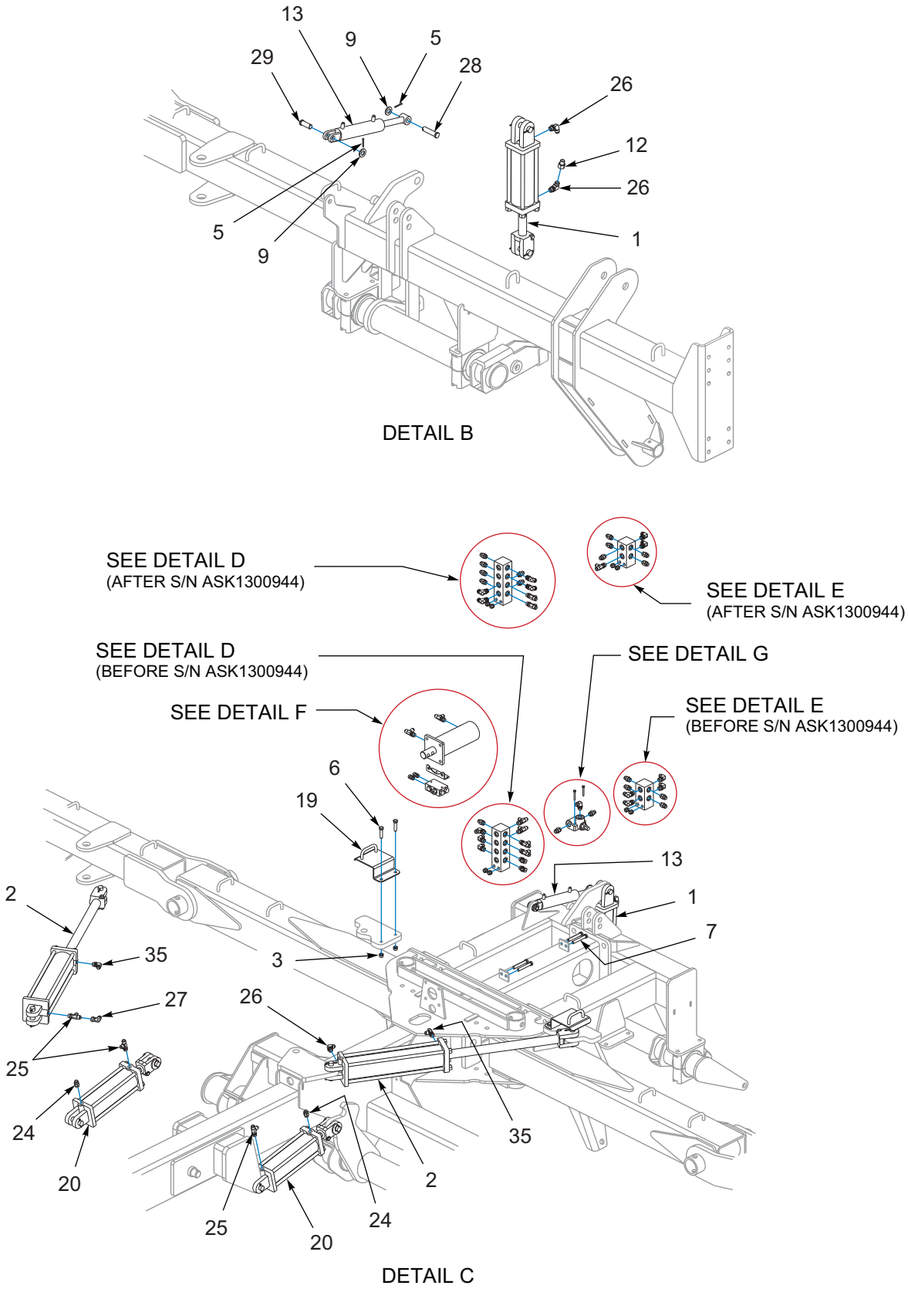

Figure 1-52: Hydraulic Cylinder and Manifold Installation (2 of 3)

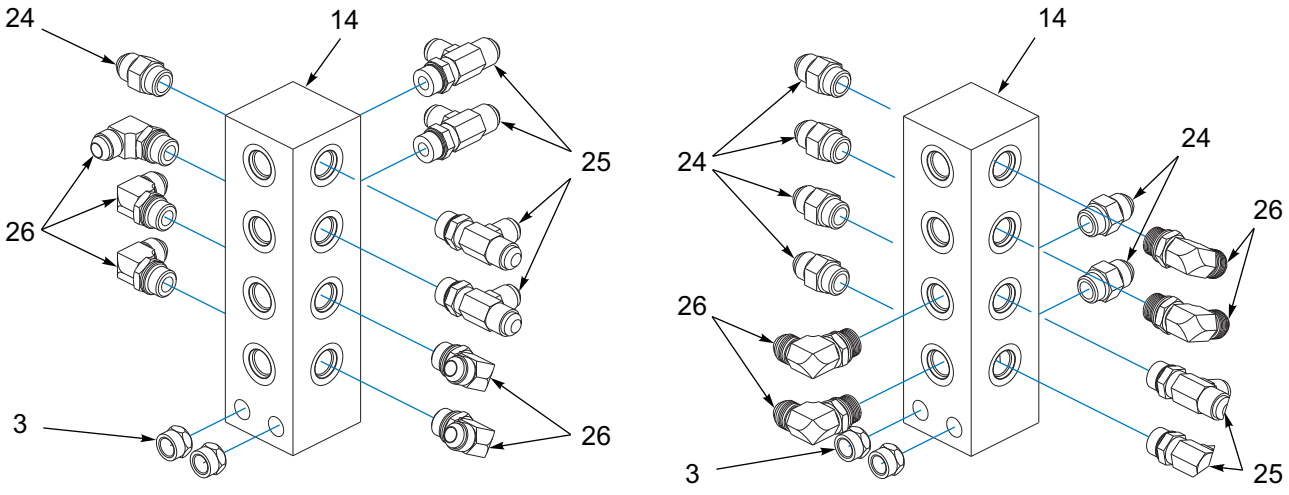

DETAIL D

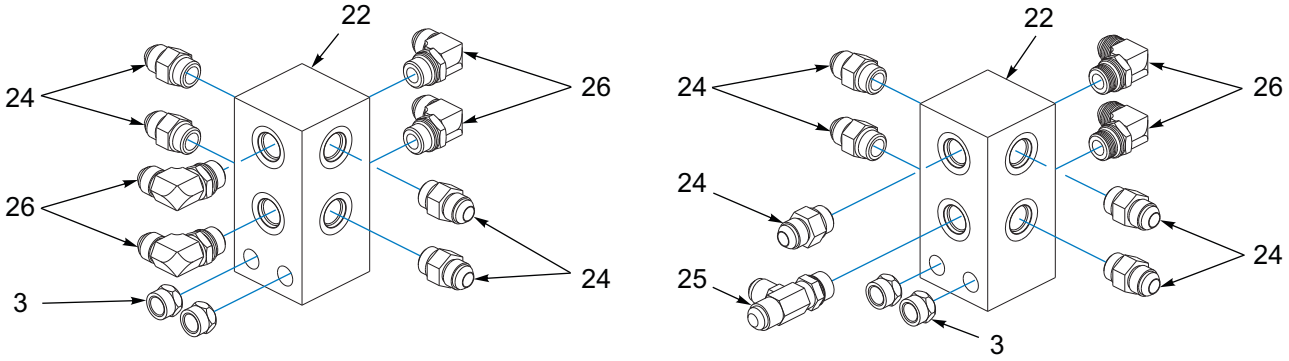

DETAIL E

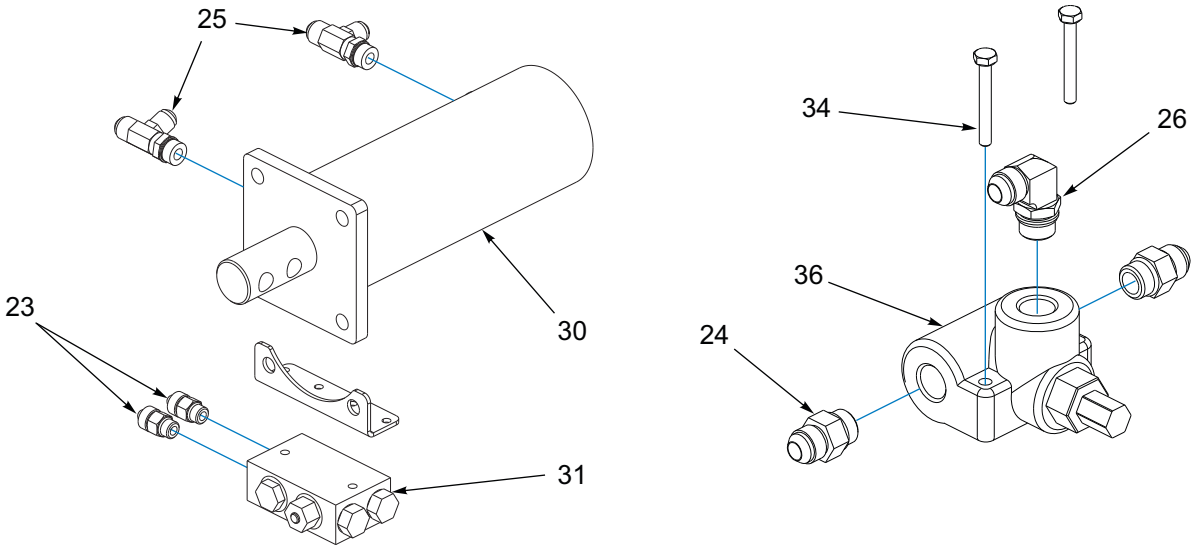

DETAIL F DETAIL G

Figure 1-53: Hydraulic Cylinder and Manifold Installation (3 of 3)

Hydraulic Cylinder and Manifold Installation

ITEM	PART NUMBER	DESCRIPTION	QTY
1	1-242-010171-3	CYLINDER, HYDRAULIC 4 X 8 3000 PSI **(SEE PAGE 1-93)**	3
2	1-242-010180-3	CYLINDER, HYRAULIC 4 X 20 3000 PSI **(SEE PAGE 1-91)**	2
3	1-512-010005-09	NUT, HEX LOCK 1/2-13, GRB	8
4	1-512-010005-15	NUT, HEX LOCK 3/4-10, GRB	4
5	1-557-010362-40	PIN, COTTER 5/32 X 1-1/4	6
6	1-654-010055-05	SCREW, HEX HEAD CAP 1/2-13 X 2, GR5	4
7	1-654-010055-11	SCREW, HEX HEAD CAP 1/2-13 X 3-1/2, GR5	4
8	1-654-010061-05	SCREW, HEX HEAD CAP 3/4-10 X 2, GR5	4
9	1-861-010032-20	WASHER, FLAT 3/4N	6
10	102-0322	BULKHEAD	6
11	123109	ADAPTER, TEE	1
12	127806	ADAPTER, HYDRAULIC W/ 3/32 RESTRICTOR	3
13	129251	CYLINDER, HYDRAULIC 1-3/4 X 6 **(SEE PAGE 1-97)**	3
14	141594	MANIFOLD, HYDRAULIC 16 PORT	1
15	141828	COUPLER, MALE 3/4-16	6
16	155528	HOSE WRAP, BLUE	1
17	155529	HOSE WRAP, YELLOW	1
18	155530	HOSE WRAP, BLACK	1
19	166544	HOLDER-HOSE WELDMENT	2
20	167308	CYLINDER, HYDRAULIC 4 X 10 **(SEE PAGE 1-92)**	2
21	167325	SHIELD, HYDRAULIC HOSE	2
22	2-474-010022	MANIFOLD HYDRAULIC ASSEMBLY, 8 HOSE	1
23	202702-6-8S	ADAPTER	2
24	202702-8-8S	ADAPTER	7
25	203005-8-8S	ADAPTER, TEE	10
26	2062-8-8S	ADAPTER, 90	19
27	2071-8-8S	ADAPTER, 90	3
28	7D642	PIN, CLEVIS 3/4 X 3	3
29	W933037-4	PIN, CLEVIS 3/4 X 2	3
30	167310	CYLINDER, HYDRAULIC 3-1/2 X 6 3000 PSI **(SEE PAGE 1-94)**	REF
31	144138	VALVE, STOP	REF
32	1-242-010172-3	CYLINDER, HYDRAULIC 4 X 24 3000 PSI **(SEE PAGE 1-90)**	REF
33	1-512-010005-01	NUT, HEX LOCK 1/4-20 GRB	2
34	1-654-010047-10	SCREW, HEX HEAD CAP 1/4-20 X 2, GR5	2
35	141826	ELBOW, 90 1/16 RESTRICTOR	2
36	165287	VALVE, RELIEF 1000 PSI	1

Hitch Lift Hydraulic Assembly (After S/N ASK1300944)

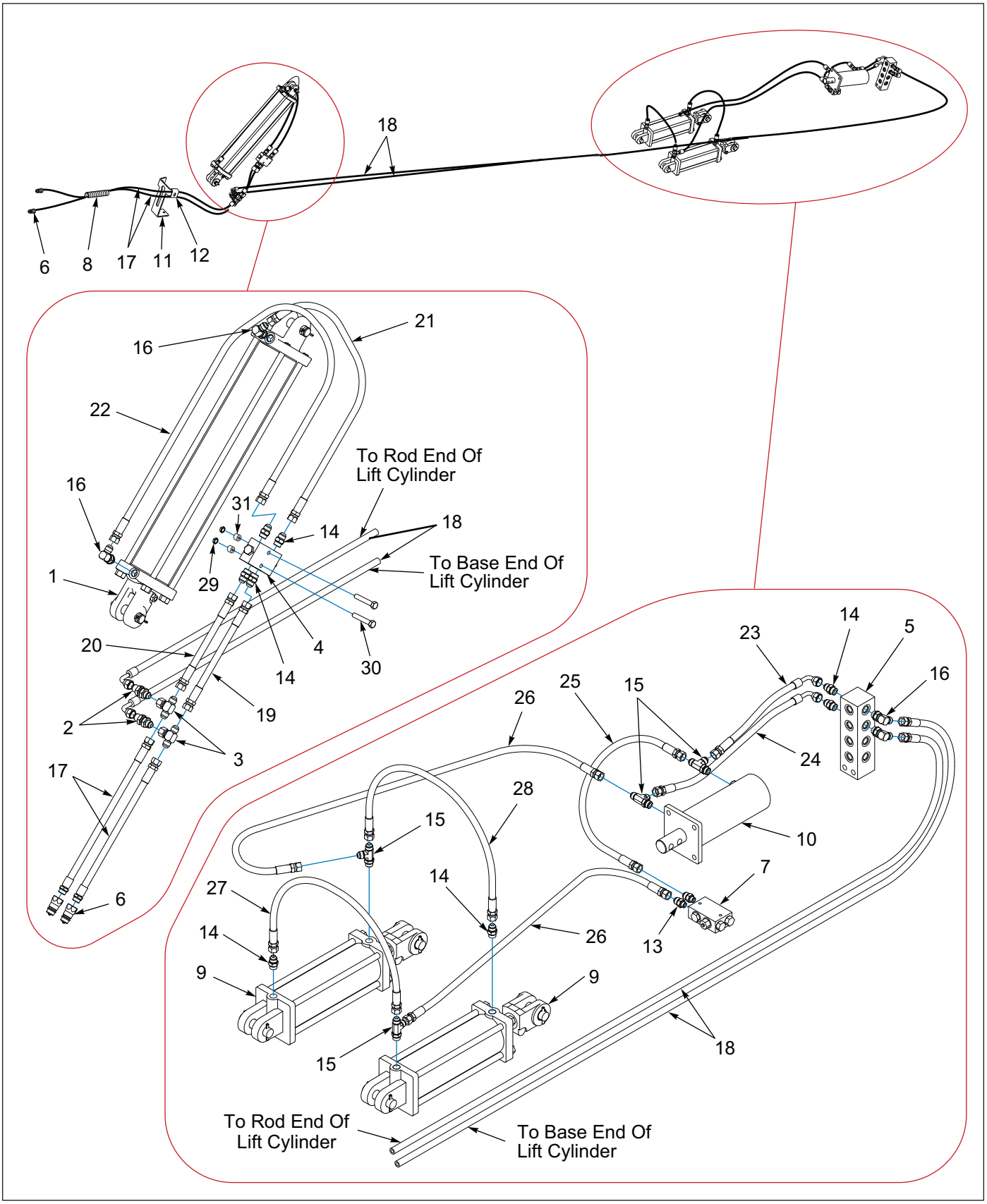

Figure 1-54: Hitch Lift Hydraulic Assembly (After S/N ASK1300944)

Hitch Lift Hydraulic Assembly (After S/N ASK1300944)

ITEM	PART NUMBER	DESCRIPTION	QTY
1	1-242-010172-3	CYLINDER, HYDRAULIC 4 X 24 3000 PSI **(SEE PAGE 1-90)**	1
2	102-0322	BULKHEAD	2
3	123109	ADAPTER, TEE	2
4	124696	VALVE, CHECK DOUBLE PILOT	1
5	141594	MANIFOLD, HYDRAULIC 16 PORT	1
6	141828	COUPLER, MALE 3/4-16	2
7	144138	VALVE, STOP	1
8	155528	HOSE WRAP, BLUE	1
9	167308	CYLINDER, HYDRAULIC 4 X 10 **(SEE PAGE 1-92)**	2
10	167310	CYLINDER, 3000 PSI 3-1/2 X 6 **(SEE PAGE 1-94)**	1
11	167322	BRACKET, HOSE HOLDER	1
12	2-181-010001	HOSE CLAMP	1
13	202702-6-8S	ADAPTER	2
14	202702-8-8S	ADAPTER	8
15	203005-8-8S	ADAPTER, TEE	4
16	2062-8-8S	ADAPTER, 90	4
17	141878	HOSE ASSEMBLY, 3/8 X 90	2
18	169963	HOSE ASSEMBLY, 3/8 X 312	2
19	174366	HOSE ASSEMBLY, 3/8 X 9	1
20	176558	HOSE ASSEMBLY, 3/8 X 8	1
21	147584	HOSE ASSEMBLY, 3/8 X 40	1
22	116489	HOSE ASSEMBLY, 3/8 X 64	1
23	169961	HOSE ASSEMBLY 3/8 X 9-1/2	1
24	169962	HOSE ASSEMBLY 3/8 X 17-1/2	1
25	153841	HOSE ASSEMBLY, 3/8 X 18	1
26	116490	HOSE ASSEMBLY, 3/8 X 78	2
27	71508985	HOSE ASSEMBLY, 3/8 X 30	1
28	137602	HOSE ASSEMBLY, HI PRESSURE 3/8 X 27	1
29	1-512-010005-05	NUT, HEX, SLFLKG GRB 3/8-16	2
30	1-654-010051-13	SCREW, HX CP, 3/8-16UNC X 3, GR5	2
31	144086	SPACER, 1 X 9/16 X 17/32	2

Hitch Lift Hydraulic Assembly (Before S/N ASK1300944)

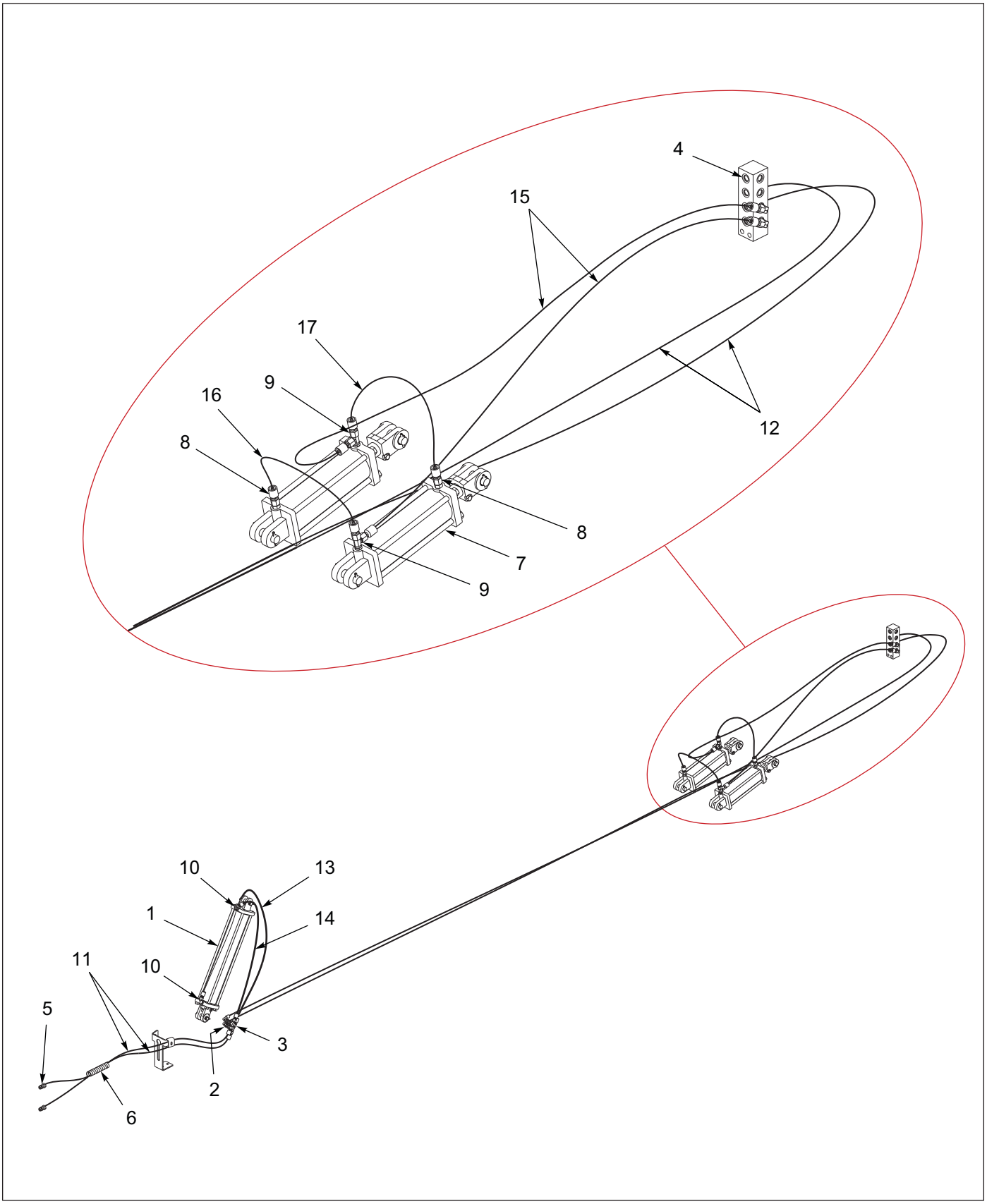

Figure 1-55: Hitch Lift Hydraulic Assembly (Before S/N ASK1300944)

Hitch Lift Hydraulic Assembly (Before S/N ASK1300944)

ITEM	PART NUMBER	DESCRIPTION	QTY
1	1-242-010172-3	CYLINDER, HYDRAULIC 4 X 24 3000 PSI **(SEE PAGE 1-90)**	REF
2	102-0322	BULKHEAD	REF
3	123109	ADAPTER, TEE	REF
4	141594	MANIFOLD, HYDRAULIC 16 PORT	REF
5	141828	COUPLER, MALE 3/4-16	REF
6	155528	HOSE WRAP, BLUE	REF
7	167308	CYLINDER, HYDRAULIC 4 X 10 **(SEE PAGE 1-92)**	REF
8	202702-8-8S	ADAPTER	REF
9	203005-8-8S	ADAPTER, TEE	REF
10	2062-8-8S	ADAPTER, 90	REF
11	141878	HOSE ASSEMBLY, 3/8 X 90	2
12	169963	HOSE ASSEMBLY, 3/8 X 312	2
13	71508988	HOSE ASSEMBLY, 3/8 X 80	1
14	1-397-010369054	HOSE ASSEMBLY, 3/8 X 54	1
15	71508987	HOSE ASSEMBLY, 3/8 X 86	2
16	71508985	HOSE ASSEMBLY, 3/8 X 30	1
17	137602	HOSE ASSEMBLY, HI PRESSURE 3/8 X 27	1

Wing Fold Hydraulic Assembly (After S/N ASB1602020)

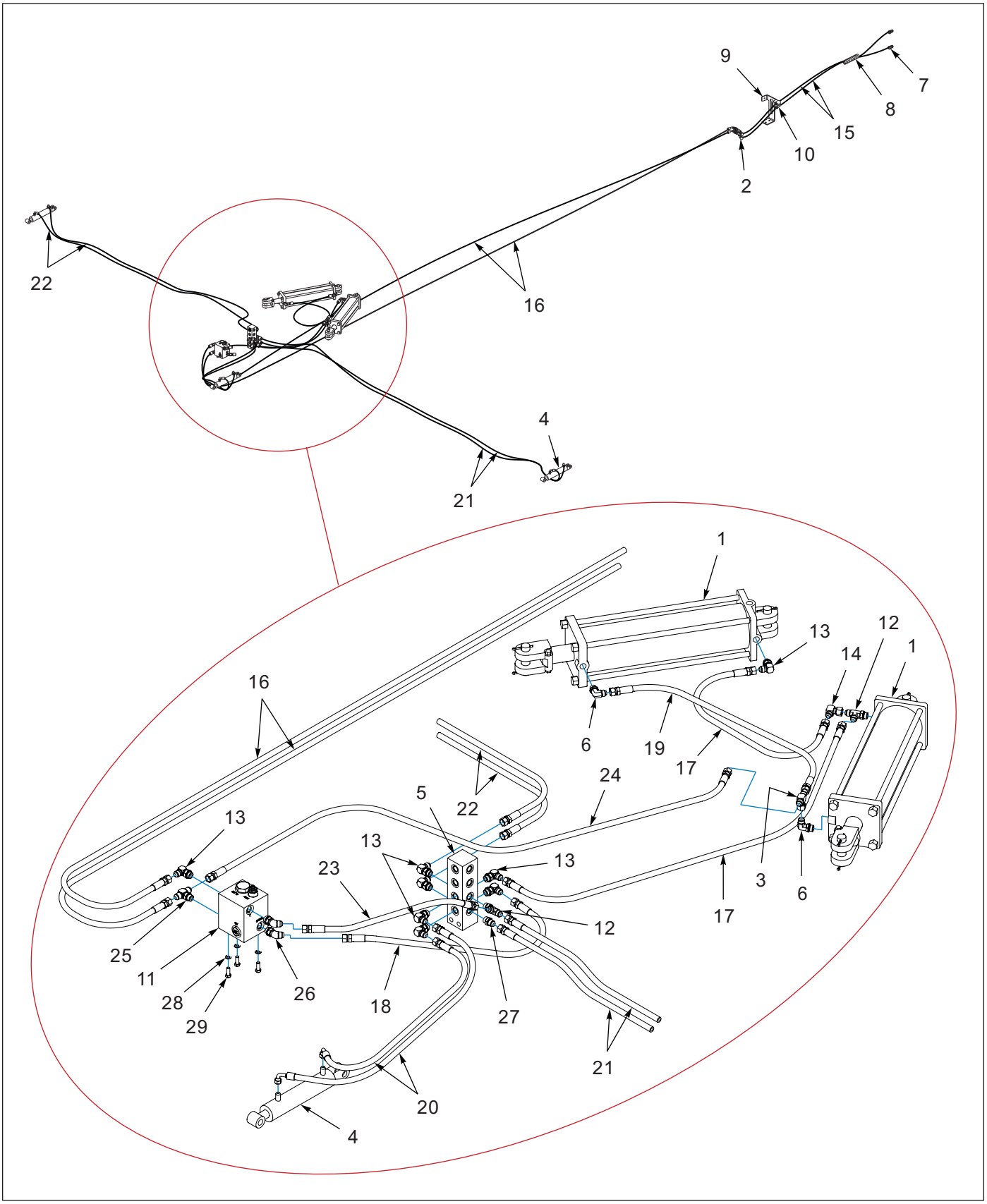

Figure 1-56: Wing Fold Hydraulic Assembly (After S/N ASB1602020)

Wing Fold Hydraulic Assembly (After S/N ASB1602020)

ITEM	PART NUMBER	DESCRIPTION	QTY
1	1-242-010180-3	CYLINDER, HYDRAULIC 4 X 20 3000 PSI **(SEE PAGE 1-91)**	2
2	102-0322	BULKHEAD	2
3	123109	ADAPTER, TEE #8 JIC	1
4	129251	CYLINDER, HYDRAULIC 1-3/4 X 6 **(SEE PAGE 1-97)**	3
5	141594	MANIFOLD, HYDRAULIC 16 PORT	1
6	141826	ELBOW, 90 1/16 RESTRICTOR	2
7	141828	COUPLER, MALE 3/4-16	2
8	155529	HOSE WRAP, YELLOW	1
9	167322	BRACKET, HOSE HOLDER	1
10	2-181-010001	HOSE CLAMP	2
11	198774	MANIFOLD PRESSURE REDUCTION, ASM **(SEE PAGE 1-86)**	1
12	203005-8-8S	ADAPTER, TEE #8 O-RING TUBE	2
13	2062-8-8S	ADAPTER, 90	8
14	2071-8-8S	ADAPTER, 90	3
15	141878	HOSE ASSEMBLY, 3/8 X 90	2
16	169963	HOSE ASSEMBLY, 3/8 X 312	2
17	1-397-010369054	HOSE ASSEMBLY 3/8 X 54	2
18	137601	HOSE ASSEMBLY, 3/8 X 20, #8JIC SWVL	1
19	71508992	HOSE ASSEMBLY, 3/8 X 50	1
20	166538	HOSE ASSEMBLY, 3/8 X 57	2
21	166547	HOSE ASSEMBLY, 3/8 X 185	2
22	166549	HOSE ASSEMBLY, 3/8 X 140	2
23	116431	HOSE ASSEMBLY, 3/8 X 15, #8JIC SWVL	1
24	71508991	HOSE ASSEMBLY, 3/8 X 56	1
25	203003-8-8S	ADAPTER, TEE #8 O-RING TUBE	1
26	2061-8-8S	ADAPTER, 45 #8 O-RING TUBE	2
27	202702-8-8S	ADAPTER, #8 O-RING TO #8 TUBE	1
28	1-861-010034-11	WASHER, LKG HLCL SPR, 3/8	3
29	1-654-010051-05	SCREW, HEX CAP 3/8-16UNC X 1, GR5	3

Wing Fold Hydraulic Assembly (After S/N ASK1300944)

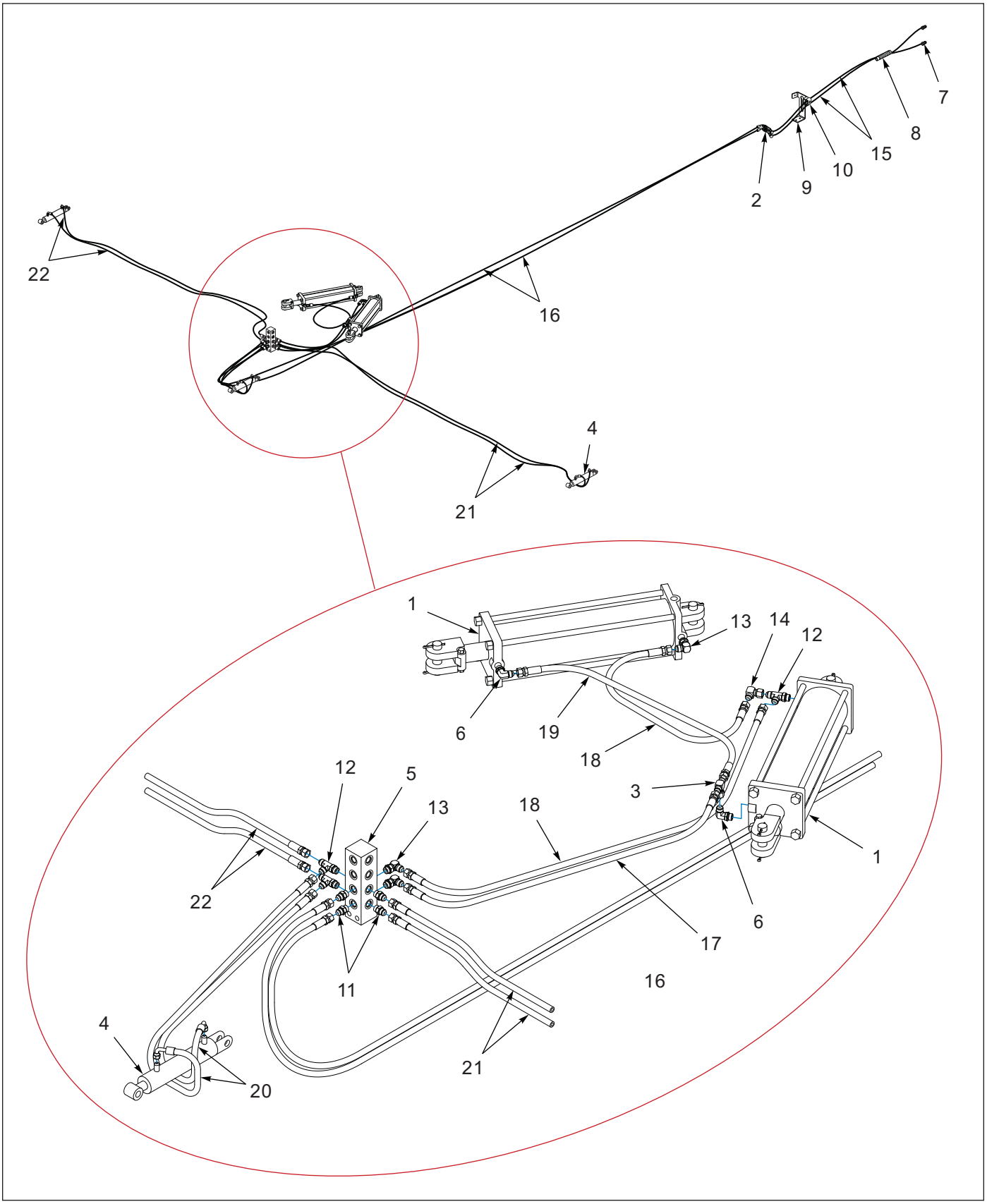

Figure 1-57: Wing Fold Hydraulic Assembly (After S/N ASK1300944)

Wing Fold Hydraulic Assembly (After S/N ASK1300944)

ITEM	PART NUMBER	DESCRIPTION	QTY
1	1-242-010180-3	CYLINDER, HYDRAULIC 4 X 20 3000 PSI **(SEE PAGE 1-91)**	2
2	102-0322	BULKHEAD	2
3	123109	ADAPTER, TEE	1
4	129251	CYLINDER, HYDRAULIC 1-3/4 X 6 **(SEE PAGE 1-97)**	3
5	141594	MANIFOLD, HYDRAULIC 16 PORT	1
6	141826	ELBOW, 90 1/16 RESTRICTOR	2
7	141828	COUPLER, MALE 3/4-16	2
8	155529	HOSE WRAP, YELLOW	1
9	167322	BRACKET, HOSE HOLDER	1
10	2-181-010001	HOSE CLAMP	2
11	202702-8-8S	ADAPTER	4
12	203005-8-8S	ADAPTER, TEE	3
13	2062-8-8S	ADAPTER, 90	3
14	2071-8-8S	ADAPTER, 90	3
15	141878	HOSE ASSEMBLY, 3/8 X 90	2
16	169963	HOSE ASSEMBLY, 3/8 X 312	2
17	71508982	HOSE ASSEMBLY, 3/8 X 36	1
18	1-397-010369054	HOSE ASSEMBLY, 3/8 X 54	2
19	71508992	HOSE ASSEMBLY, 3/8 X 50	1
20	166538	HOSE ASSEMBLY, 3/8 X 57	2
21	166547	HOSE ASSEMBLY, 3/8 X 185	2
22	166549	HOSE ASSEMBLY, 3/8 X 140	2

Wing Fold Hydraulic Assembly (Before S/N ASK1300944)

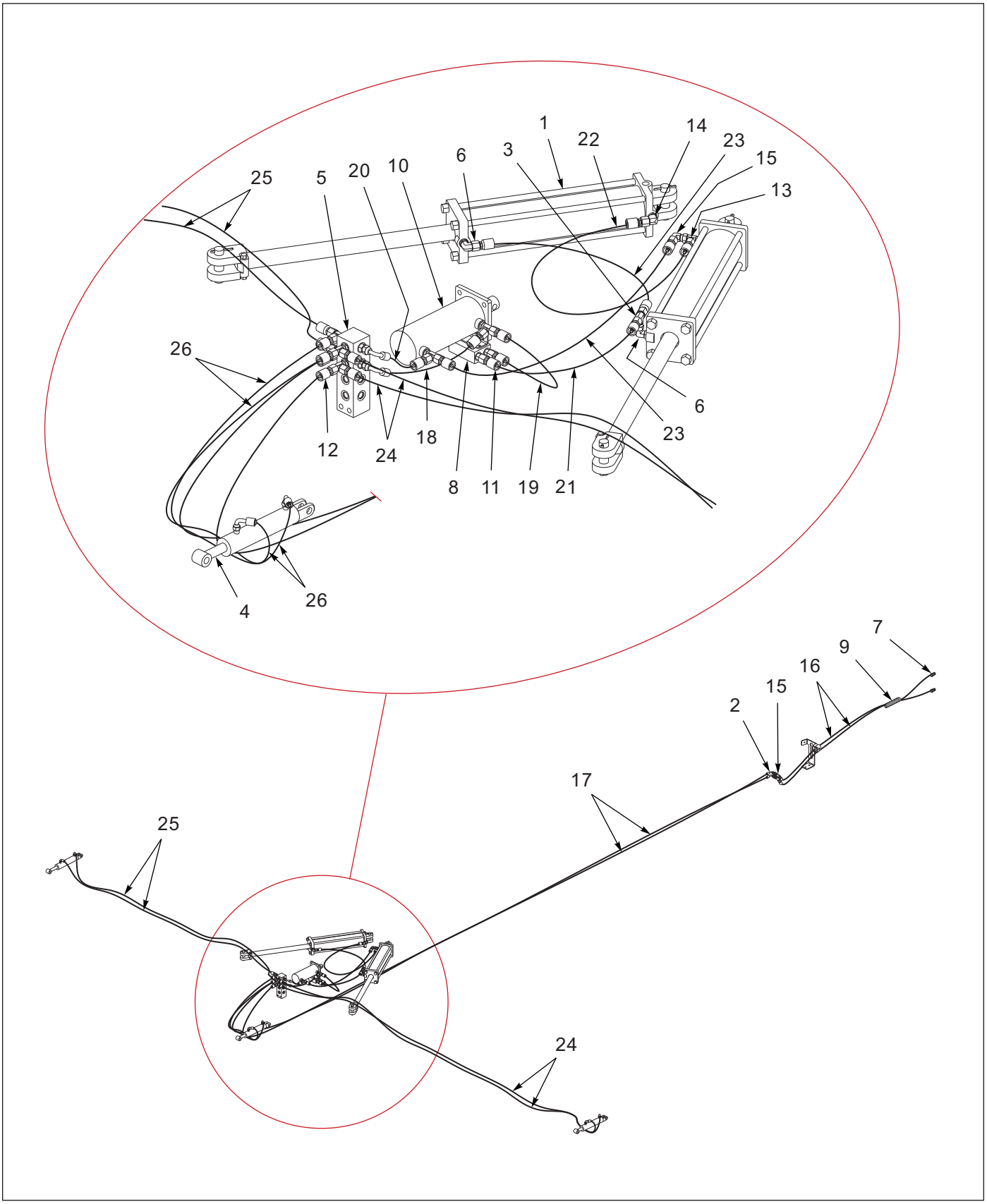

Figure 1-58: Wing Fold Hydraulic Assembly (Before S/N ASK1300944)

Wing Fold Hydraulic Assembly (Before S/N ASK1300944)

ITEM	PART NUMBER	DESCRIPTION	QTY
1	1-242-010180-3	CYLINDER, HYDRAULIC 4 X 20 3000 PSI **(SEE PAGE 1-91)**	REF
2	102-0322	BULKHEAD	REF
3	123109	ADAPTER, TEE	REF
4	129251	CYLINDER, HYDRAULIC 1-3/4 X 6 **(SEE PAGE 1-97)**	REF
5	141594	MANIFOLD, HYDRAULIC 16 PORT	REF
6	141826	ELBOW, 90 1/16 RESTRICTOR	REF
7	141828	COUPLER, MALE 3/4-16	REF
8	144138	VALVE, STOP	REF
9	155529	HOSE WRAP, YELLOW	REF
10	167310	CYLINDER, 3000 PSI 3-1/2 X 6 **(SEE PAGE 1-94)**	REF
11	202702-6-8S	ADAPTER	REF
12	202702-8-8S	ADAPTER	REF
13	203005-8-8S	ADAPTER, TEE	REF
14	2062-8-8S	ADAPTER, 90	REF
15	2071-8-8S	ADAPTER, 90	REF
16	141878	HOSE ASSEMBLY, 3/8 X 90	2
17	169963	HOSE ASSEMBLY, 3/8 X 312	2
18	169962	HOSE ASSEMBLY, 3/8 X 17-1/2	1
19	153841	HOSE ASSEMBLY, 3/8 X 18	2
20	169961	HOSE ASSEMBLY, 3/8 X 9-1/2	1
21	137602	HOSE ASSEMBLY, 3/8 X 27	1
22	1-397-010369054	HOSE ASSEMBLY, 3/8 X 54	1
23	71508992	HOSE ASSEMBLY, 3/8 X 50	2
24	166547	HOSE ASSEMBLY, 3/8 X 170	2
25	166549	HOSE ASSEMBLY, 3/8 X 145	2
26	166538	HOSE ASSEMBLY, 3/8 X 50	2

Manifold Pressure Reduction Assembly

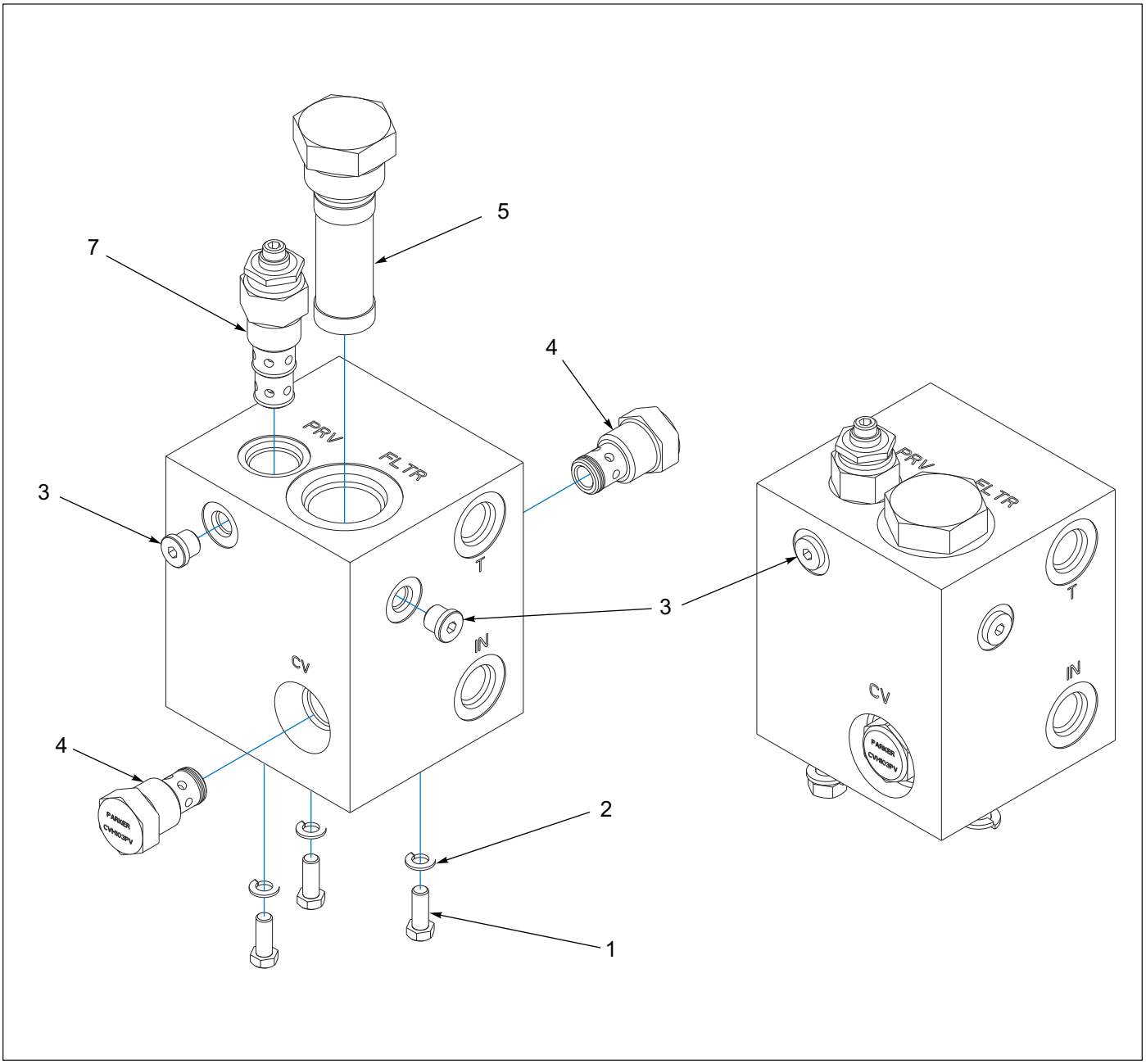

Figure 1-59: Manifold Pressure Reduction Assembly

Manifold Pressure Reduction Assembly

ITEM	PART NUMBER	DESCRIPTION	QTY
	198774	MANIFOLD PRESSURE REDUCTION, ASM	1
1	1-654-010051-05	SCREW, HEX CAP 3/8-16UNC X 1, GR5	3
2	1-861-010034-11	WASHER, LKG HLCL SPR, 3/8	3
3	121028	PLUG SAE M O-RING BOSS HX SKT	2
4	195196	VALVE CHECK, CVH103P	2
5	195198	FILTER-HIGH PRESSURE, CF/CE-12-10	1
6	198773	MAINFOLD PRESSURE REDUCTION	1
7	198775	VALVE-PRESSURE REDUCING RELIEV	1

Table provided for general use.

NOTES:

3-PT Lift Hydraulic Assembly

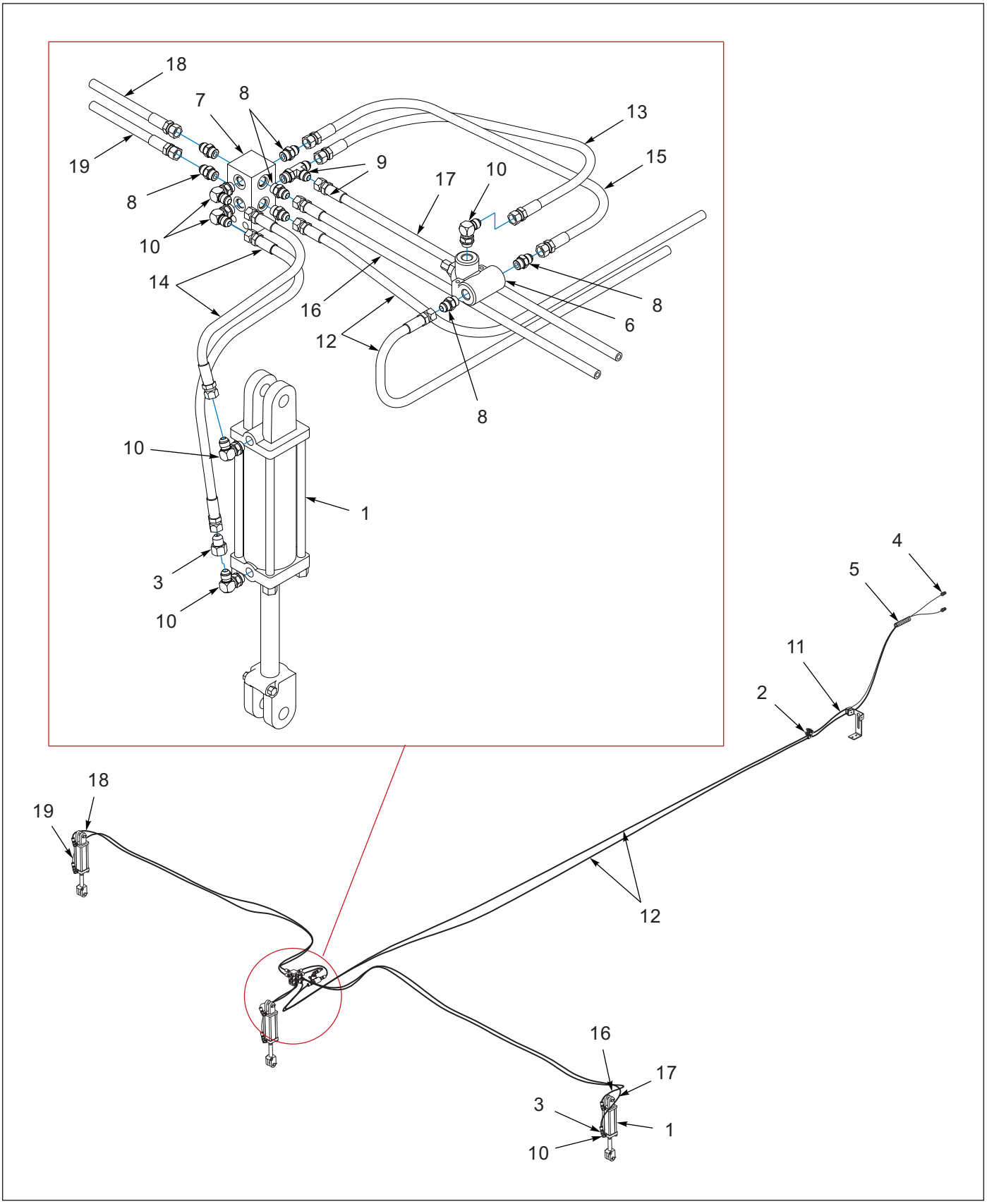

Figure 1-60: 3-PT Lift Hydraulic Assembly

3-PT Lift Hydraulic Assembly

ITEM	PART NUMBER	DESCRIPTION	QTY
1	1-242-010171-3	CYLINDER, HYDRAULIC 4 X 8 3000 PSI **(SEE PAGE 1-93)**	REF
2	102-0322	BULKHEAD	REF
3	127806	ADAPTER, HYDRAULIC	REF
4	141828	COUPLER, MALE 3/4-16	REF
5	155530	HOSE WRAP, BLACK	REF
6	165287	VALVE, RELIEF 1000 PSI	REF
7	2-474-010022	MANIFOLD HYDRAULIC ASSEMBLY, 8 HOSE	REF
8	202702-8-8S	ADAPTER	REF
9	203005-8-8S	ADAPTER, TEE	REF
10	2062-8-8S	ADAPTER, 90	REF
11	141878	HOSE ASSEMBLY, 3/8 X 90	2
12	169963	HOSE ASSEMBLY, 3/8 X 312	2
13	153841	HOSE ASSEMBLY, 3/8 X 18	1
14	147584	HOSE ASSEMBLY, 3/8 X 40	2
15	71508954	HOSE ASSEMBLY, 3/8 X 22	1
16	71509000	HOSE ASSEMBLY, 3/8 X 202	1
17	153621	HOSE ASSY, 3/8 X 212 #8 JIC SWIV	1
18	150273	HOSE ASSY, 3/8 X 185 #8 JIC SWIV	1
19	117163	HOSE ASSY, 3/8 X 196 #8 JIC	1

Hydraulic Cylinder, 4 x 24 - Prince

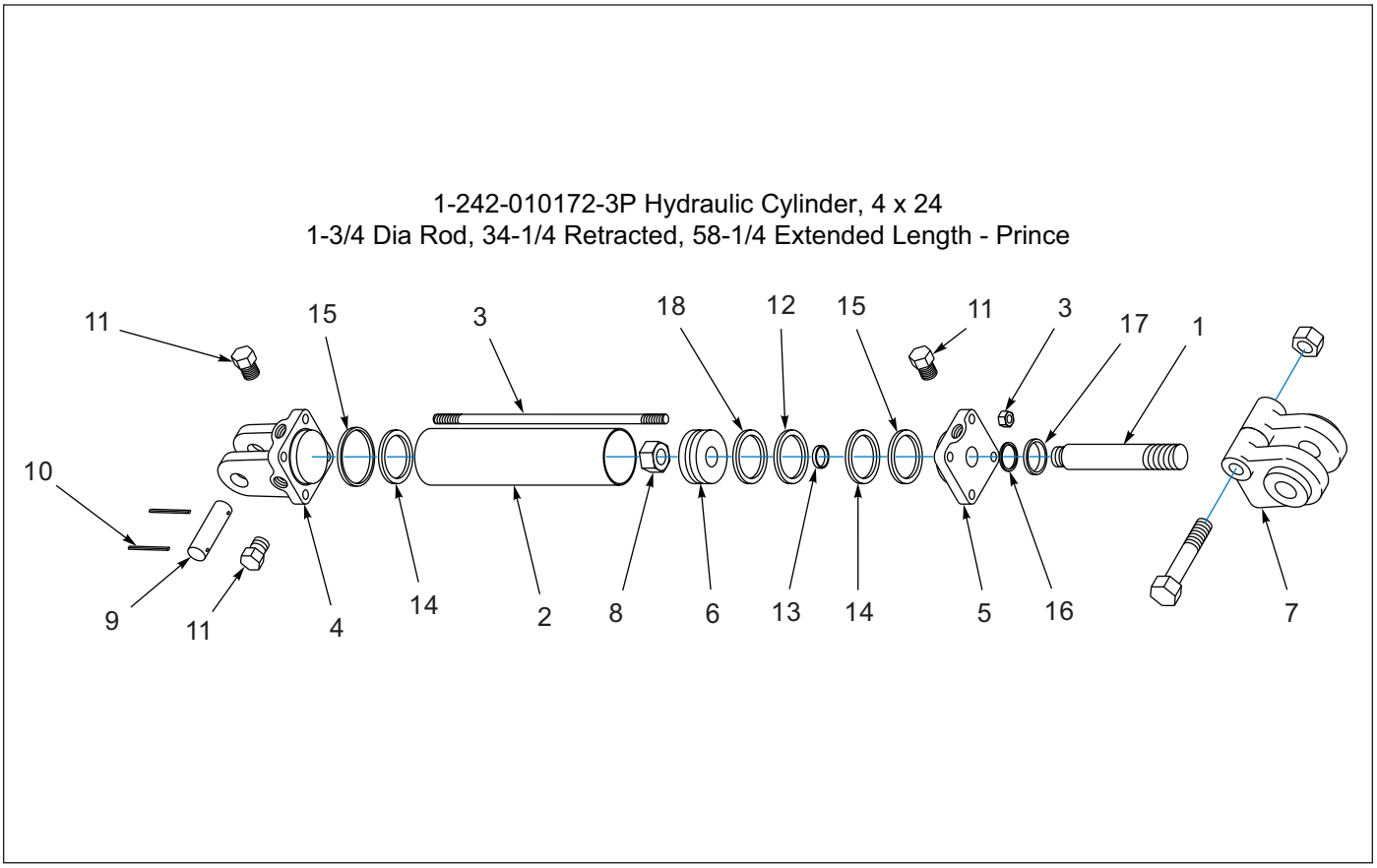

Figure 1-61: Hydraulic Cylinder, 4 x 24 - Prince

Hydraulic Cylinder, 4 x 24 - Prince

ITEM	PART NUMBER	DESCRIPTION	QTY
	1-242-010172-3	CYL HYD 4 X 24 3000 PSI	1
1	111863	PISTON ROD	1
2	- - - - -	TUBE	1
3	- - - - -	TIE ROD ASM	4
4	- - - - -	BUTT	1
5	- - - - -	GLAND ASM	1
6	111868	PISTON	1
7	100000326	CLEVIS ASM	1
8	220000212	LOCKNUT	1
9	111790	CLEVIS PIN	2
10	111789	ROLL PIN	4
11	1-007-010025	PLUG, 3/4-16 O-RING BOSS	3
12	- - - - -	CROWN SEAL	1
13	- - - - -	O-RING	1
14	- - - - -	O-RING	2
15	- - - - -	BU-WASHER	2
16	- - - - -	U-CUP	1
17	- - - - -	WIPER	1
18	111912	BEARING RING	1
19	1-242-010178-3	SEAL KIT **(INCLUDES ITEMS 12 - 18)**	1

Hydraulic Cylinder, 4 x 20 - Prince

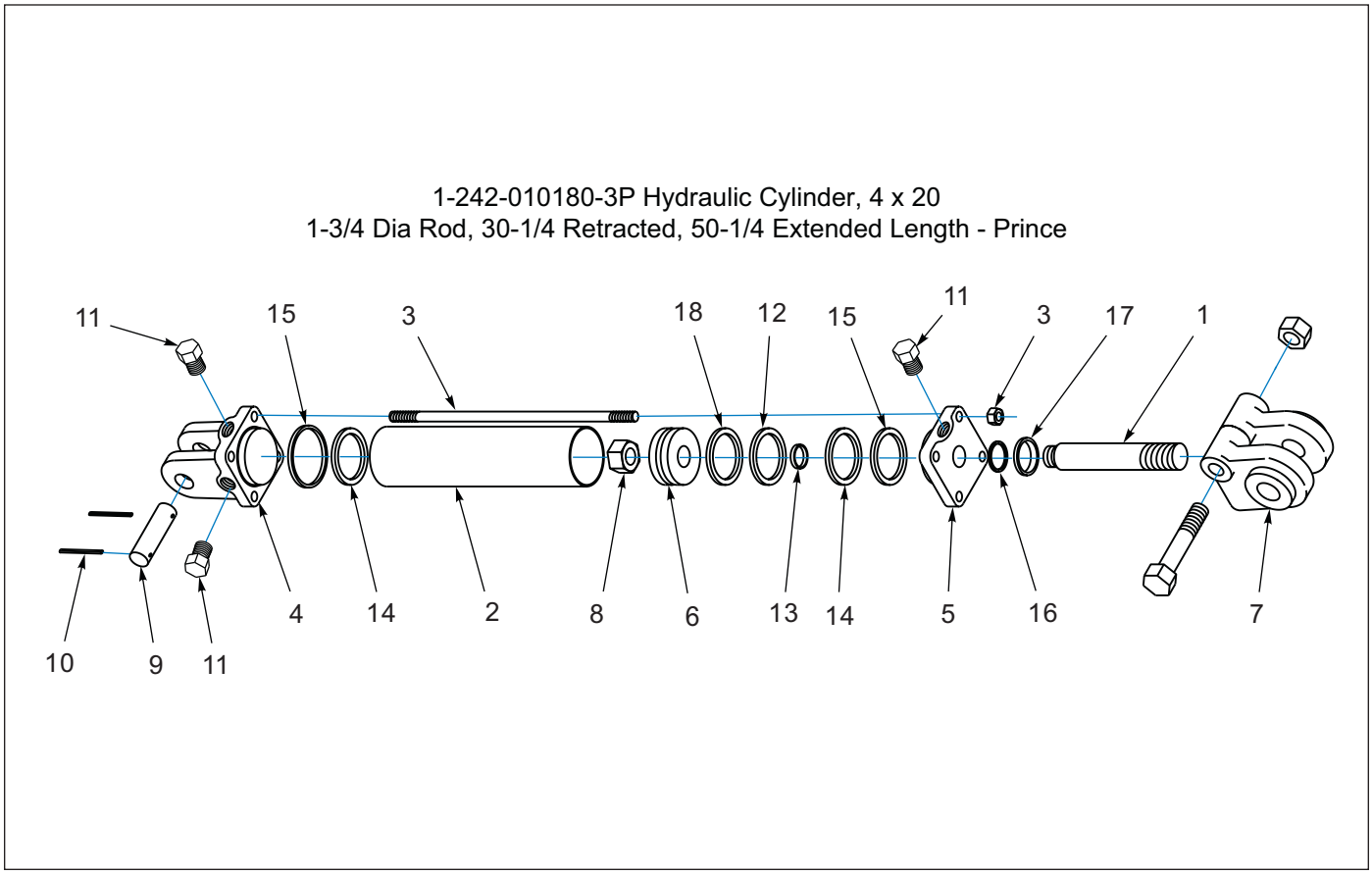

Figure 1-62: Hydraulic Cylinder, 4 x 20 - Prince

Hydraulic Cylinder, 4 x 20 - Prince

ITEM	PART NUMBER	DESCRIPTION	QTY
	1-242-010180-3	CYLINDER, HYD 4 X 20STRK 3000PSI	1
1	011000323	PISTON ROD 4 X 20 SAE34020	1
2	- - - - -	TUBE	1
3	- - - - -	TIE ROD ASM	4
4	- - - - -	BUTT	1
5	- - - - -	GLAND ASM	1
6	- - - - -	PISTON	1
7	100000326	CLEVIS ASM	1
8	220000212	LOCKNUT	1
9	111790	PIN, CLEVIS #190400104 1500	2
10	111789	PIN, ROLL #190100057 1500	4
11	1-007-010025	PLUG, 3/4-16 O-RING BOSS	3
12	- - - - -	CROWN SEAL	1
13	- - - - -	O-RING	1
14	- - - - -	O-RING	2
15	- - - - -	BU-WASHER	2
16	- - - - -	U-CUP	1
17	- - - - -	WIPER	1
18	- - - - -	BEARING RING	1
19	1-242-010178-3	SEAL KIT **(INCLUDES ITEMS 12-18)**	1

Hydraulic Cylinder, 4 x 10 - Prince

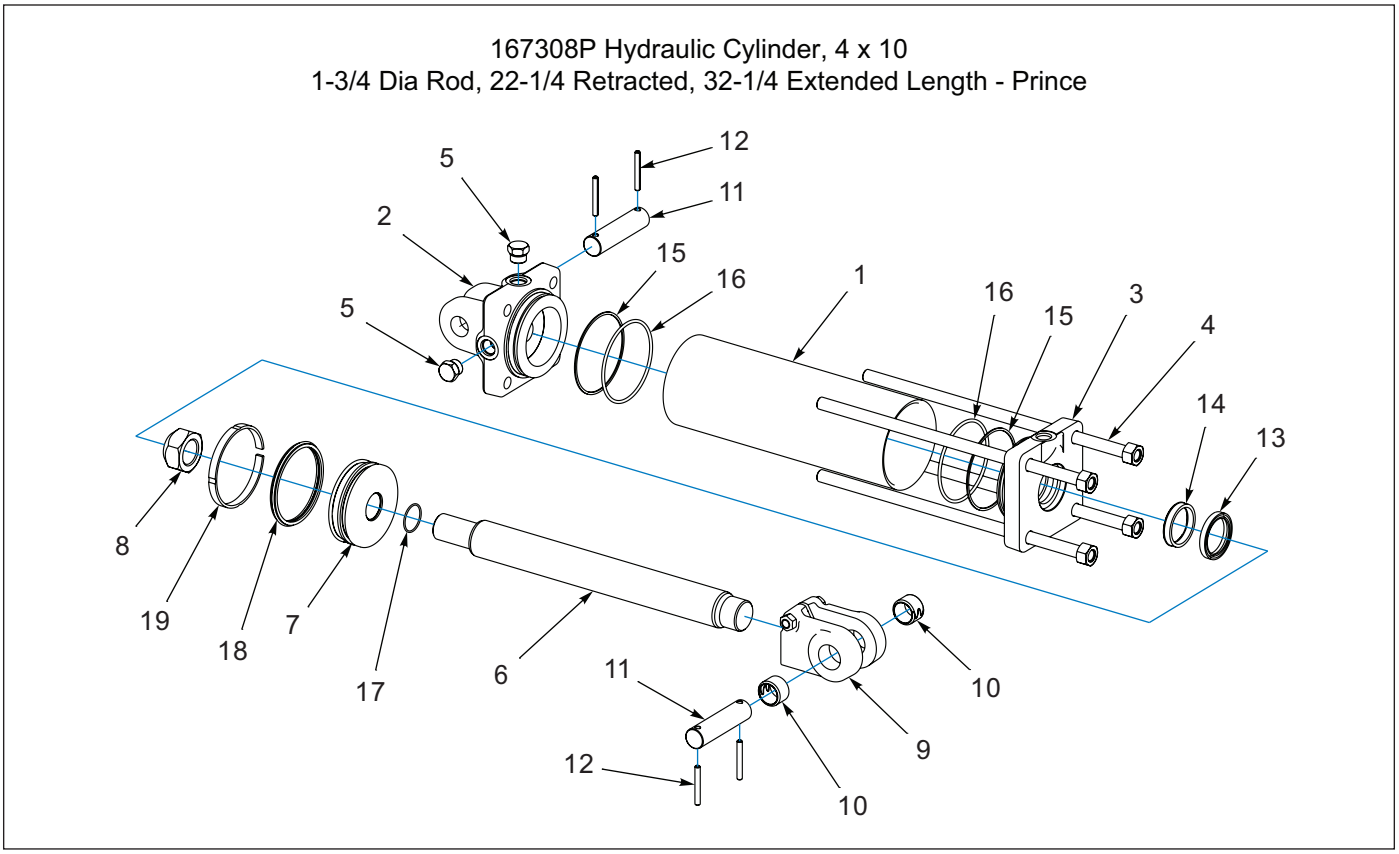

Figure 1-63: Hydraulic Cylinder, 4 x 10 - Prince

Hydraulic Cylinder, 4 x 10 - Prince

ITEM	PART NUMBER	DESCRIPTION	QTY
	167308	CYLINDER, HYDRAULIC 4 X 10 3000 PSI	1
1	- - - - -	TUBE	1
2	147743	BUTT CLEVIS ASSEMBLY	1
3	154101	GLAND	1
4	154103	TIEROD ASSEMBLY	4
5	1-007-010025	PLUG,3/4-16 O-RING BOSS	3
6	- - - - -	PISTON ROD	1
7	- - - - -	PISTON	1
8	220000212	NUT LOCKING 1-242-010042	1
9	154102	CLEVIS ASSEMBLY **(INCLUDES ITEM 10)**	1
10	113805	BUSHING FOR 102182 PRINCE	2
11	143994	PIN, CLEVIS	1
12	1-647-010004221	PIN,SPRING 1/4X2 SLOTTED	12
13	- - - - -	WIPER	1
14	- - - - -	U-CUP	1
15	- - - - -	BU-WASHER	2
16	- - - - -	O-RING	2
17	- - - - -	O-RING	1
18	- - - - -	CROWN SEAL	1
19	- - - - -	PISTON BEARING RING	1
20	154104	PACKING KIT **(INCLUDES ITEMS 13 - 19)**	1

Hydraulic Cylinder, 4 x 8 - Prince

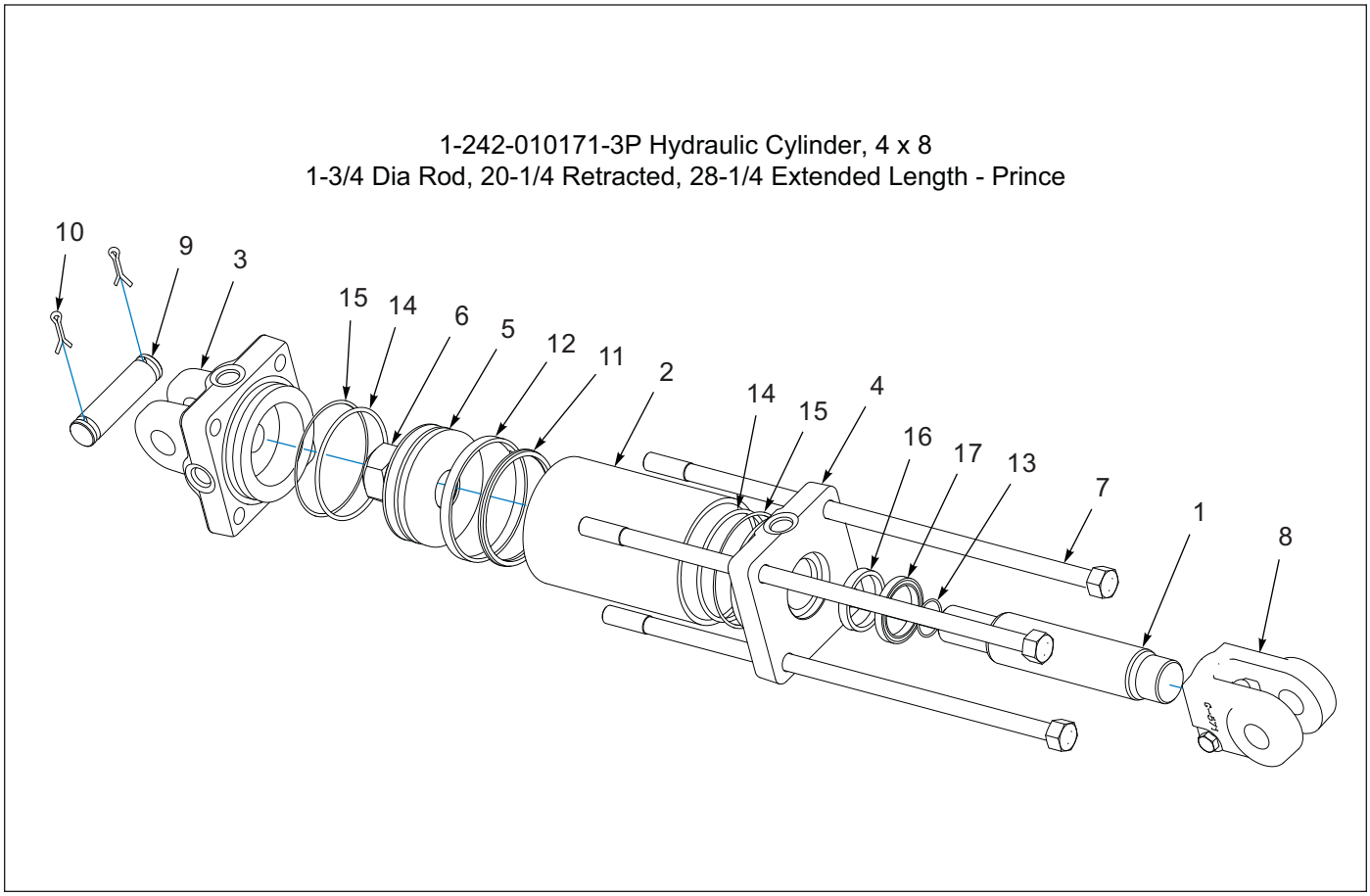

Figure 1-64: Hydraulic Cylinder, 4 x 8 - Prince

Hydraulic Cylinder, 4 x 8 - Prince

ITEM	PART NUMBER	DESCRIPTION	QTY
	1-242-010171-3	CYLINDER, HYDRAULIC 4 X 8 3000 PSI	1
1	011000318	PISTON ROD	1
2	- - - - -	TUBE	1
3	- - - - -	BUTT	1
4	162674	GLAND	1
5	- - - - -	PISTON	1
6	- - - - -	LOCKNUT	1
7	- - - - -	TIEROD ASSEMBLY	4
8	100000326	CLEVIS ASSEMBLY	1
9	190400035	CLEVIS PIN	2
10	110-4224	COTTER PIN, 3/16 X 2	4
11	- - - - -	CROWN SEAL	1
12	- - - - -	O-RING	1
13	- - - - -	O-RING	2
14	- - - - -	BU-WASHER	2
15	- - - - -	U-CUP	1
16	- - - - -	WIPER	1
17	- - - - -	BEARING RING	1
18	1-242-010178-3	PACKING KIT **(INCLUDES ITEMS 11-17)**	1

Hydraulic Cylinder, 3-1/2 x 6 - Prince

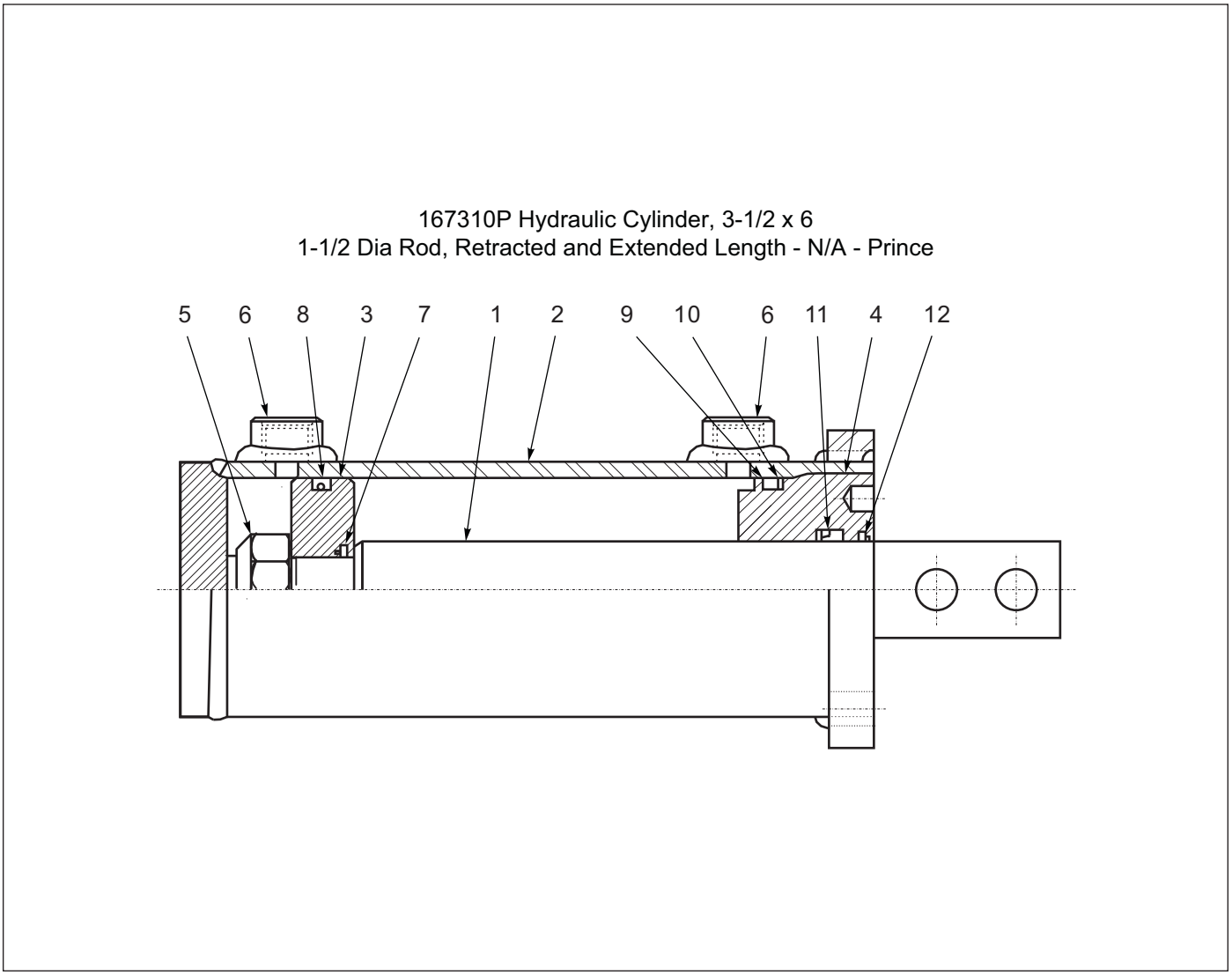

Figure 1-65: Hydraulic Cylinder, 3-1/2 x 6 - Prince

Hydraulic Cylinder, 3-1/2 x 6 - Prince

ITEM	PART NUMBER	DESCRIPTION	QTY
	167310	CYLINDER, HYDRAULIC 3-1/2" X 6"	1
1	142803	PISTON ROD	1
2	- - - - -	BUTT AND TUBE ASSEMBLY	1
3	- - - - -	PISTON	1
4	142806	GLAND	1
5	- - - - -	LOCKNUT	1
6	- - - - -	PORT PLUG	2
7	- - - - -	O-RING	1
8	- - - - -	CROWN SEAL	1
9	- - - - -	O-RING	1
10	- - - - -	BU-WASHER	1
11	- - - - -	U-CUP	1
12	- - - - -	CANNED WIPER	1
13	142807	PACKING KIT **(INCLUDES ITEMS 7-12)**	1

Hydraulic Cylinder, 2-1/2 x 20 - Carlson

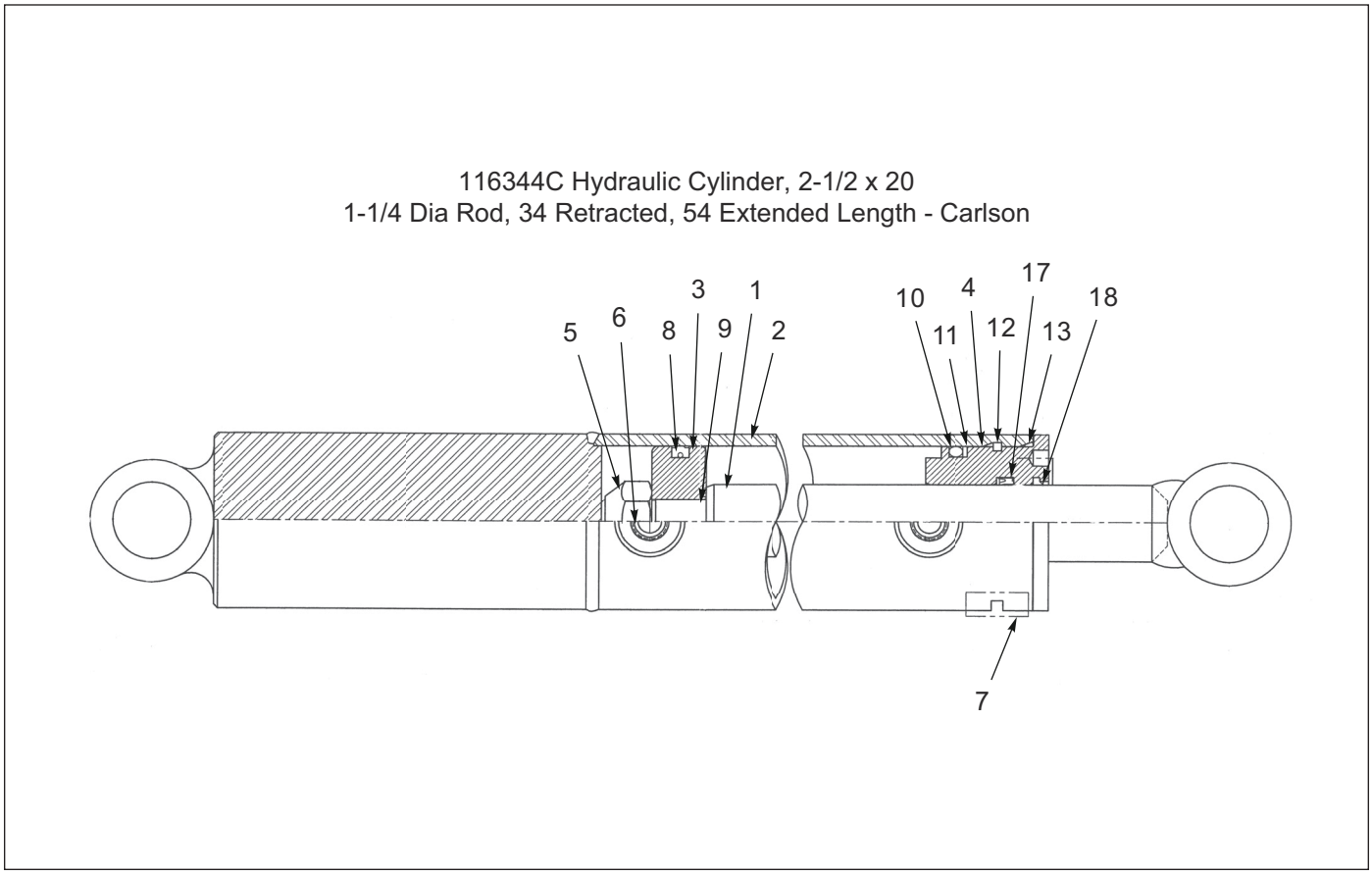

Figure 1-66: Hydraulic Cylinder, 2-1/2 x 20 - Carlson

Hydraulic Cylinder, 2-1/2 x 20 - Carlson

ITEM	PART NUMBER	DESCRIPTION	QTY
	116344	CYLINDER, MARKER 2.5 X 20.06 **(CARLSON)**	1
1	120802	PISTON ROD ASSEMBLY	1
2	- - - - -	BUTT AND TUBE ASSEMBLY	1
3	117512	PISTON	1
4	120803	GLAND	1
5	- - - - -	LOCKNUT	1
6	- - - - -	PORT PLUG	2
7	- - - - -	SQUARE WIRE TAPE	1
8	- - - - -	CROWN SEAL	1
9	- - - - -	O-RING	1
10	- - - - -	O-RING	1
11	- - - - -	BU-WASHER	1
12	- - - - -	SQUARE RET. WIRE	1
13	- - - - -	O-RING	1
14	- - - - -	U-CUP	1
15	- - - - -	WIPER	1
16	- - - - -	INSTALLATION RING	1
17	- - - - -	U-CUP	1
18	- - - - -	WIPER	1
19	157027	SEAL KIT **(INCLUDES ITEMS 8-18)**	1

Hydraulic Cylinder, 2-1/2 x 20 - Prince

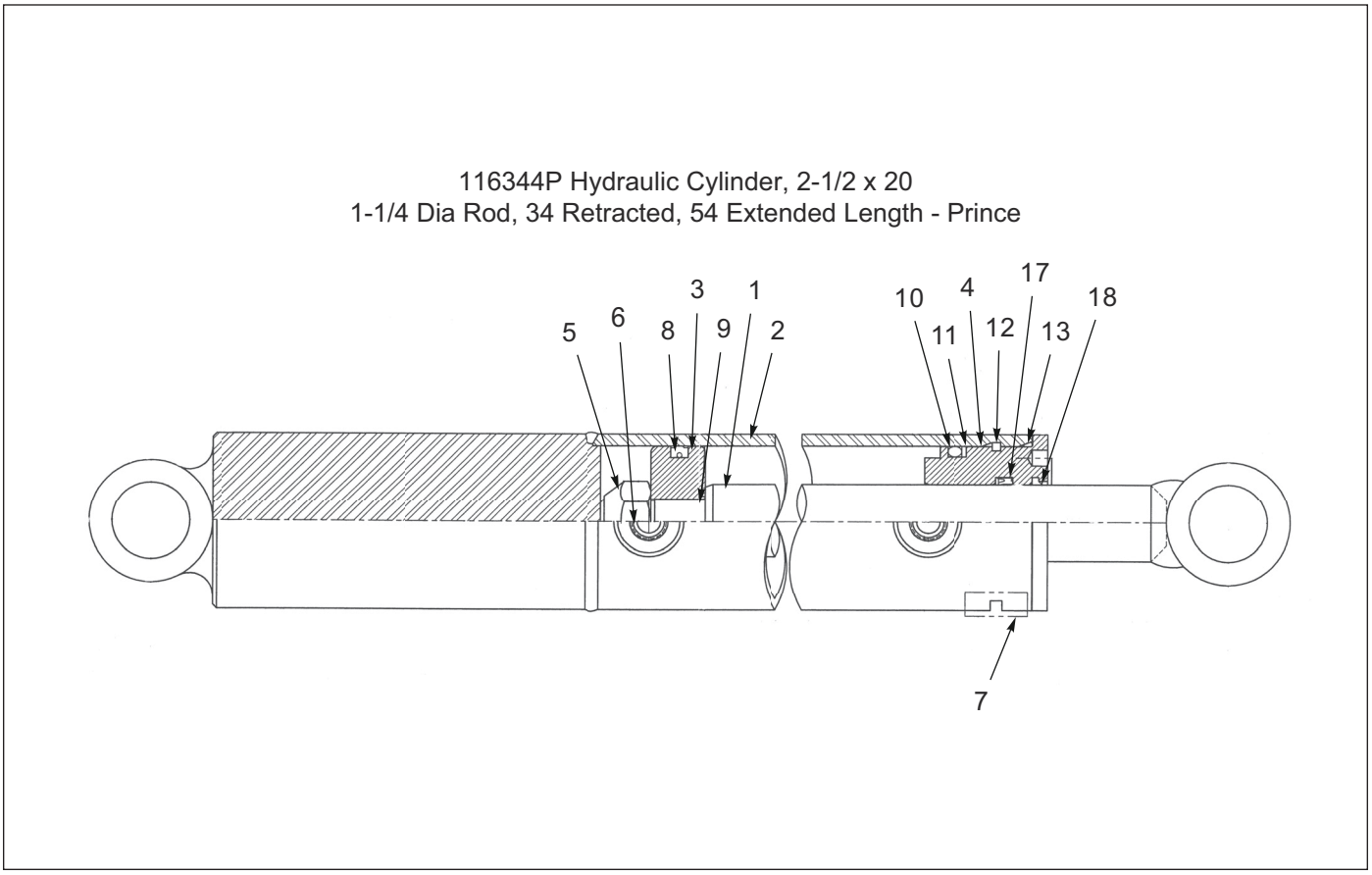

Figure 1-67: Hydraulic Cylinder, 2-1/2 x 20 - Prince

Hydraulic Cylinder, 2-1/2 x 20 - Prince

ITEM	PART NUMBER	DESCRIPTION	QTY
	116344	CYLINDER,HYD 2-1/2 X 20 **(PRINCE)**	1
1	120802	PISTON ROD ASSEMBLY	1
2	- - - - -	BUTT AND TUBE ASSEMBLY	1
3	117512	PISTON	1
4	120803	GLAND	1
5	- - - - -	LOCKNUT	1
6	- - - - -	PORT PLUG	2
7	- - - - -	SQUARE WIRE TAPE	1
8	- - - - -	CROWN SEAL	1
9	- - - - -	O-RING	1
10	- - - - -	O-RING	1
11	- - - - -	BU-WASHER	1
12	- - - - -	SQUARE RET. WIRE	1
13	- - - - -	O-RING	1
14	- - - - -	U-CUP	1
15	- - - - -	WIPER	1
16	- - - - -	INSTALLATION RING	1
17	- - - - -	U-CUP	1
18	- - - - -	WIPER	1
19	117514	SEAL KIT **(INCLUDES ITEMS 8-18)**	1

Hydraulic Cylinder, 1-3/4 x 6 - Prince

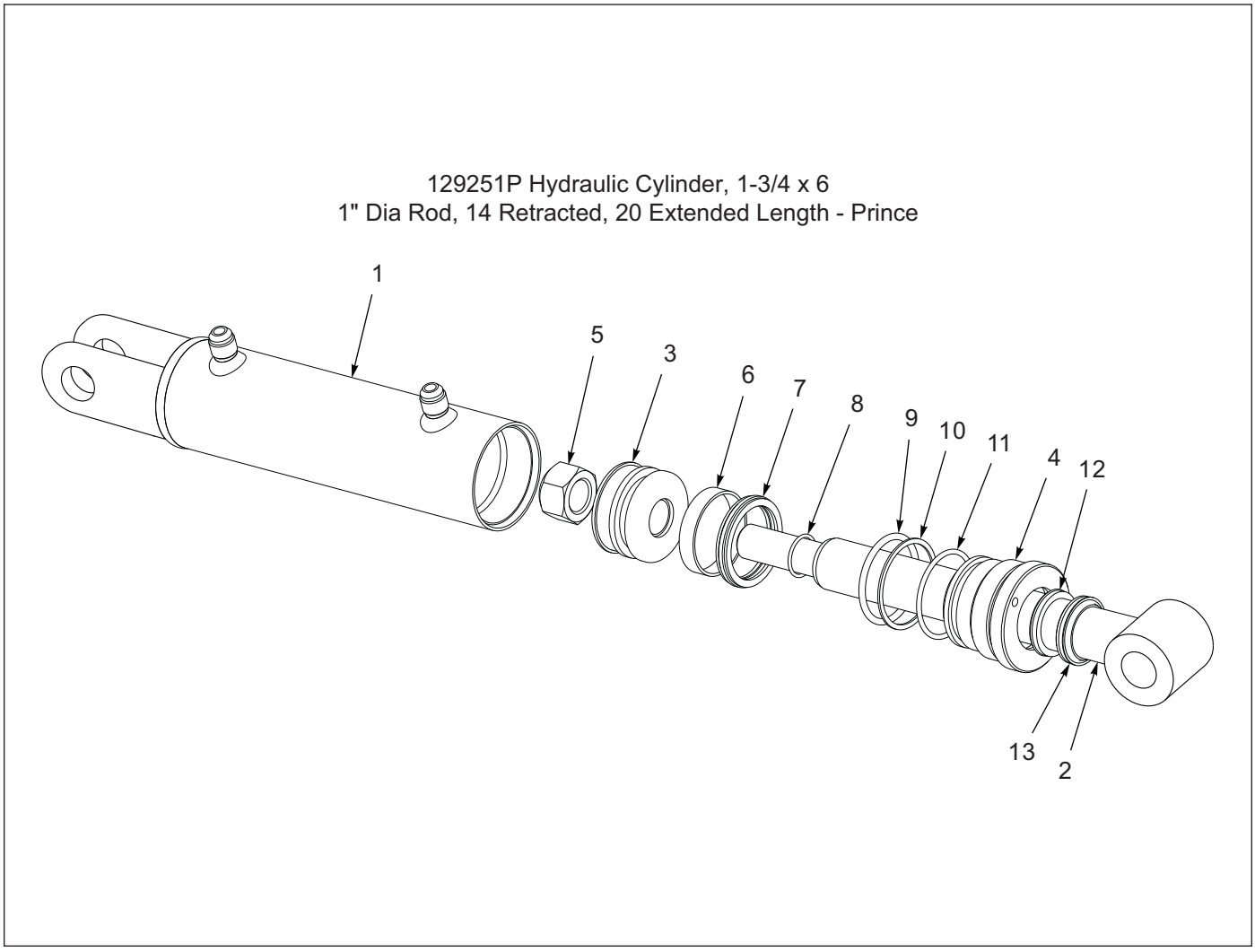

Figure 1-68: Hydraulic Cylinder, 1-3/4 x 6 - Prince

Hydraulic Cylinder, 1-3/4 x 6 - Prince

ITEM	PART NUMBER	DESCRIPTION	QTY
	129251	CYLINDER, HYD 1-3/4 X 6	1
1	- - - - -	BUTT AND TUBE ASSEMBLY	1
2	169650	PISTON ROD	1
3	- - - - -	PISTON	1
4	169651	GLAND	1
5	- - - - -	LOCKNUT	1
6	- - - - -	BEARING RING	1
7	- - - - -	CROWN SEAL	1
8	- - - - -	O-RING	1
9	- - - - -	O-RING	1
10	- - - - -	BU-WASHER	1
11	- - - - -	O-RING	1
12	- - - - -	U-CUP	1
13	- - - - -	WIPER	1
14	131868	PACKING KIT **(INCLUDES ITEM 6-13)**	1

Decals

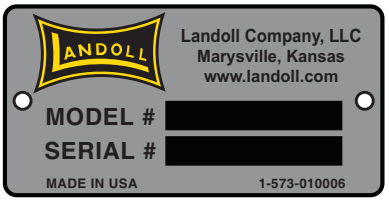

ITEM 1
1-573-010006

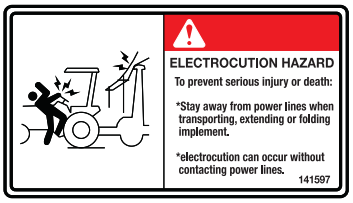

ITEM 2
141597



ITEM 3
144193

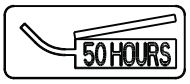

ITEM 6
2-573-010330-03



ITEM 4
155523



ITEM 5
2-573-010198



ITEM 7
2-573-010335

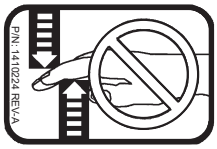

ITEM 12
1410224



ITEM 20
192069



ITEM 4
219155



ITEM 9
170510



ITEM 18
8J309



ITEM 11
171606

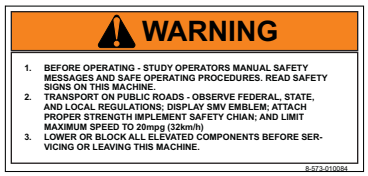

ITEM 10
8-573-010084



ITEM 8
170509

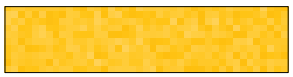

ITEM 15
528934



ITEM 13
234507



ITEM 14
235621



ITEM 14
235624



ITEM 16
528933



ITEM 17
528938

Figure 1-69: Decals

Decals

ITEM	PART NUMBER	DESCRIPTION	QTY
1	1-573-010006	PLACARD, NAME	4
2	141597	DECAL, DANGER ELECTROCUTION	1
3	144193	DECAL, SIS 20MPH	1
4	155523	DECAL, HOSE IDENTIFICATION	1
4	219155	DECAL, HOSE ID, 4630 W/MARKERS **(ROW MARKERS ONLY)**	1
5	2-573-010198	DECAL, MEMBER FEMA	1
6	2-573-010330-03	DECAL, LUBRICATION 50 HOURS	4
7	2-573-010335	DECAL, DANGER PINCHING	1
8	170509	DECAL, BRILLION LANDOLL 40"	8
9	170510	DECAL, BRILLION LANDOLL	4
10	8-573-010084	DECAL, WARNING BEFORE OPERATING	1
11	171606	DECAL, MODEL 4630	3
12	1410224	DECAL, PINCH POINT **(ROW MARKERS ONLY)**	2
13	234507	DECAL, QR CODE, FLDNG SEEDER	1
14	235621	DECAL, QR CODE AG SEEDER **(1 PER SEEDER)** **(SEE PAGE 1-31)**	REF
14	235624	DECAL, QR CODE, LANDSCAP SEEDER **(1 PER SEEDER)** **(SEE PAGE 1-31)**	REF
15	528934	REFLECTOR, YELLOW, 2 X 9	8
16	528933	REFLECTOR, RED, 2 X9	2
17	528938	STRIPE, ORANGE	2
18	8J309	DECAL -'CAUTION'	3
19	156010	RIVET, BLIND .156 X 1/2 GRIP **(HARDWARE FOR ITEM 1)** **(2 PER NAME PLACARD)**	8
20	192069	DECAL,DO NOT PRESSURE CLEAN **(NOT SHOWN)** **(USED ON ELECTRIC CLUTCH)**	3

Decal Placement

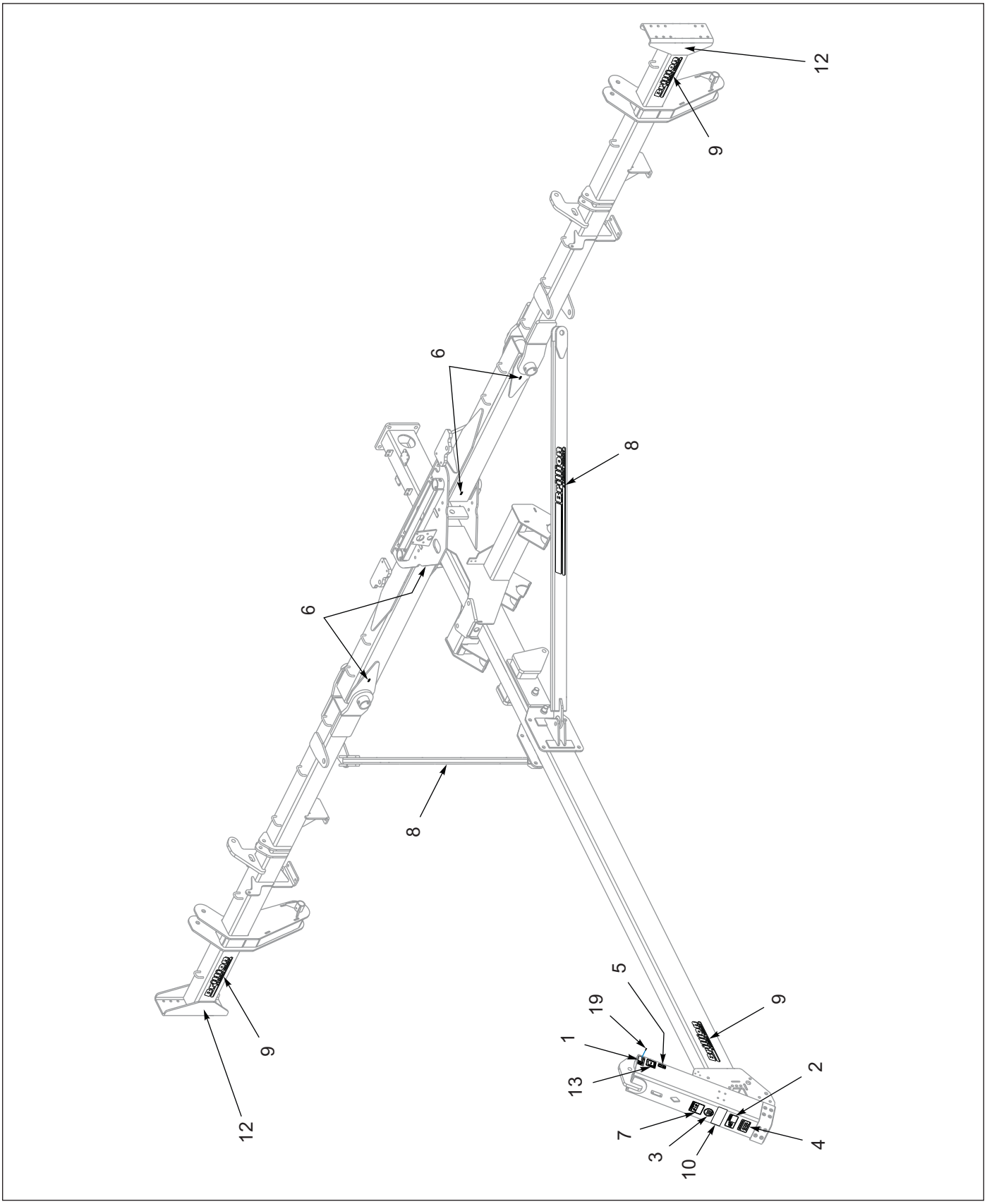

Figure 1-70: Decal Placement

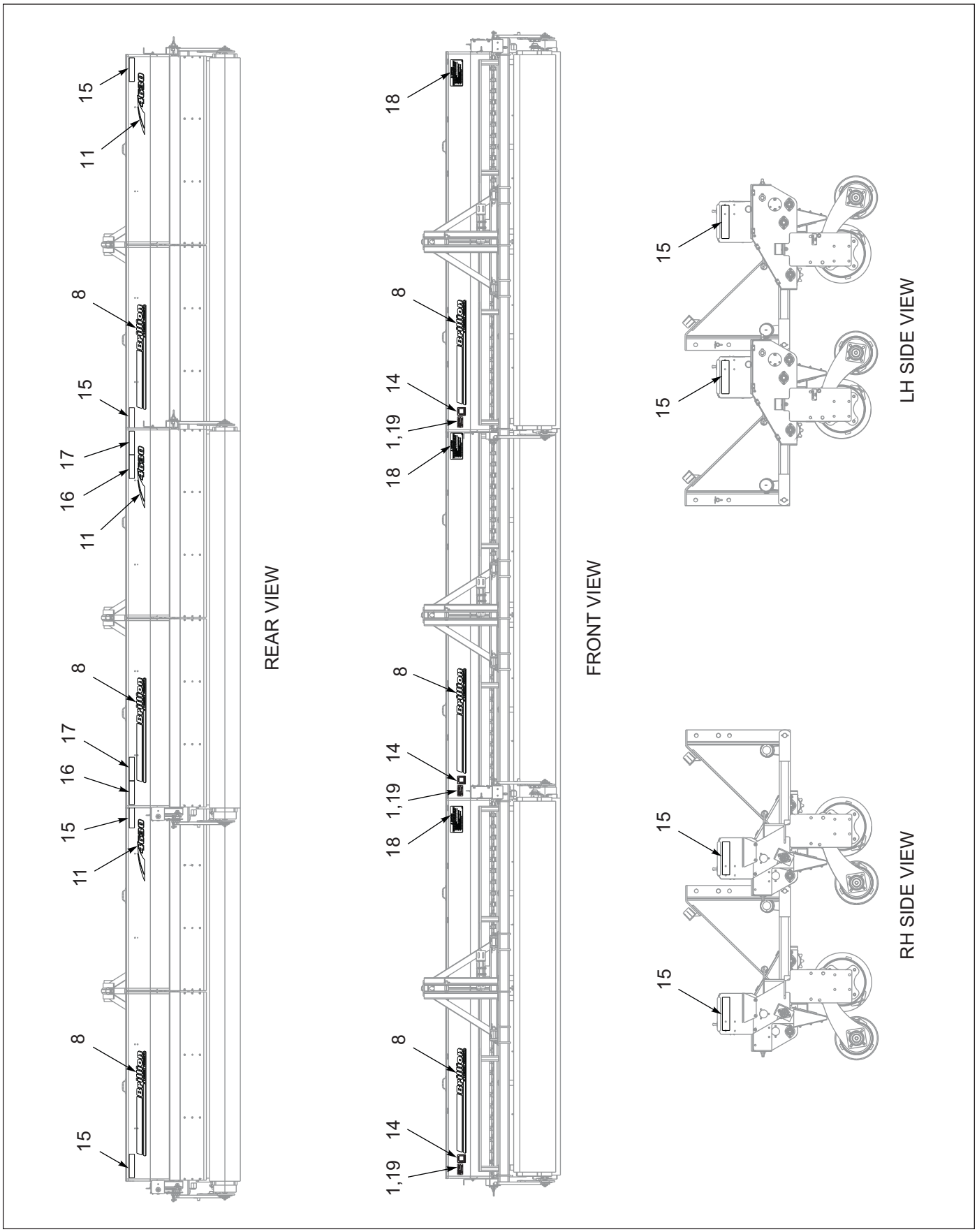

Figure 1-71: Decal Placement

Table provided for general use.

NOTES:

Chapter 2

Glossary

For clarity this glossary of industry standard abbreviations and their definitions are provided.

A

ASM . . . . . .Assembly

B

BATT . . . . . .Battery
BHSC . . . . . .Button Head Socket Cap
BLK . . . . . Black

C

CB . . . . . .Carriage Bolt
CONN . . . . . Connector
CRG . . . . . Carriage
CTSK . . . . . Countersunk
CTWT . . . . . .Counterweight
CVR . . . . . .Cover
CYD . . . . . .Cylinder

D

DBL . . . . . .Double
DIA . . . . . Diameter

E

ENCLSD . . . . . Enclosed

F

FHCS . . . . . .Flanged Head Cap Screw
FHHCS . . . . . Flanged Hex Head Cap Screw
FL OR **FLG** . . . . . .Flange
FLT . . . . . Flat

G

GA . . . . . Gauge

H

HHCS . . . . . .Hex Head Cap Screw
HCS . . . . . High Carbon Steel
HD . . . . . .Head
HLCL . . . . . .Helical
HCSKT . . . . . .Hex Socket
HSFC . . . . . .Hex Socket Flat Countersunk
HYD . . . . . Hydraulic

I

ID . . . . . Inside Diameter

L

LH . . . . . Lefthand
LKG OR **LOCK** . . . . . .Locking
LWR . . . . . Lower

M

MANF . . . . . Manifold
MNT . . . . . Mount

N

NRW . . . . . Narrow
- - - - - . . . . . .Not Serviced Separately

O

OD . . . . . Outside Diameter
OHG . . . . . .Overhead Guard
ORFS OR **ORS** . . . . . O-Ring Seal
ORP OR **ORB** . . . . . .O-Ring Boss

P

P-STEER . . . . . .Power Steering
PTFE . . . . . .Polytetrafluoroethylene (Teflon)

R

RH . . . . . Righthand
RND . . . . . Round

S

SER . . . . . Series
SHCS . . . . . Socket Head Cap Screw
SHLD . . . . . Shield
SKT . . . . . Socket
SLFLKG . . . . . Selflocking
SOC . . . . . Socket
SPDT . . . . . Single Pole Double Throw
SPR . . . . . Spring
SQ . . . . . Square
SRTD . . . . . Serrated
SSCR . . . . . Setscrew
SST . . . . . Stainless Steel
STD . . . . . Standard

U

UPR . . . . . Upper

W

WHL . . . . . Wheel
WLD OR **WLDMT** . . . . . Weldment

Chapter 3
Index

Numerics

011000318 . . . . . *1-93*
011000323 . . . . . *1-91*
100000326 . . . . . *1-90*, *1-91*, *1-93*
100545 . . . . . *1-11*
1-007-010025 . . . . . *1-90*, *1-91*, *1-92*
100827 . . . . . *1-21*
100829 . . . . . *1-21*
101385 . . . . . *1-11*, *1-15*
101988 . . . . . *1-15*
102-0322 . . *1-30*, *1-75*, *1-77*, *1-79*, *1-81*, *1-83*, *1-85*, *1-89*
102497 . . . . . *1-8*
102498 . . . . . *1-8*, *1-16*
102499 . . . . . *1-8*
102600 . . . . . *1-8*
102601 . . . . . *1-8*
102602 . . . . . *1-8*
102603 . . . . . *1-8*
102604 . . . . . *1-8*, *1-16*
104031 . . . . . *1-26*
104329 . . . . . *1-30*
105-0228 . . . . . *1-30*, *1-59*, *1-61*
107-0023 . . . . . *1-11*
1-076-010007 . . . . . *1-16*
1-076-010010 . . . . . *1-16*
108787 . . . . . *1-50*, *1-54*
110-4224 . . . . . *1-93*
111-2590 . . . . . *1-26*
111789 . . . . . *1-90*, *1-91*
111790 . . . . . *1-90*, *1-91*
111863 . . . . . *1-90*
111868 . . . . . *1-90*
111912 . . . . . *1-90*
113805 . . . . . *1-92*
114616 . . . . . *1-3*
116032 . . . . . *1-26*
116034 . . . . . *1-26*
116038 . . . . . *1-26*
116100 . . . . . *1-26*
116254 . . . . . *1-26*
116337 . . . . . *1-26*
116339 . . . . . *1-26*
116344 . . . . . *1-26*, *1-30*, *1-95*, *1-96*
116350 . . . . . *1-30*
116354 . . . . . *1-26*
116355 . . . . . *1-26*
116366 . . . . . *1-26*
116390 . . . . . *1-26*
116405 . . . . . *1-26*
116431 . . . . . *1-81*
116438 . . . . . *1-26*
116446 . . . . . *1-26*
116447 . . . . . *1-26*
116489 . . . . . *1-77*
116490 . . . . . *1-77*
117163 . . . . . *1-89*
117186 . . . . . *1-26*
117512 . . . . . *1-95*, *1-96*
117514 . . . . . *1-96*
119084 . . . . . *1-26*
120369 . . . . . *1-26*
120400 . . . . . *1-26*
120802 . . . . . *1-95*, *1-96*
120803 . . . . . *1-95*, *1-96*
121028 . . . . . *1-86*
122404 . . . . . *1-70*
122405 . . . . . *1-70*
122709 . . . . . *1-44*
123096 . . . . . *1-19*

123109 ..... *1-75*, *1-77*, *1-79*, *1-81*, *1-83*, *1-85*
124032 ..... *1-46*, *1-63*
1-242-010171-3 ..... *1-75*, *1-89*, *1-93*
1-242-010172-3 ..... *1-3*, *1-75*, *1-77*, *1-79*, *1-90*
1-242-010178-3 ..... *1-90*, *1-91*, *1-93*
1-242-010180-3 ..... *1-75*, *1-81*, *1-83*, *1-85*, *1-91*
124696 ..... *1-77*
127806 ..... *1-75*, *1-89*
129251 ..... *1-75*, *1-81*, *1-83*, *1-85*, *1-97*
1-298-010001-1 ..... *1-8*, *1-13*, *1-15*, *1-16*, *1-26*
131868 ..... *1-97*
13519 ..... *1-11*
137601 ..... *1-81*
137602 ..... *1-77*, *1-79*, *1-85*
137654 ..... *1-70*
139603 ..... *1-52*
1-397-010369054 ..... *1-3*, *1-79*, *1-81*, *1-83*, *1-85*
139974 ..... *1-70*
140519 ..... *1-5*
140554 ..... *1-16*
140599 ..... *1-11*, *1-21*
140645 ..... *1-16*
140893 ..... *1-30*
1410224 ..... *1-27*, *1-99*
141197 ..... *1-16*
141236 ..... *1-16*
141238 ..... *1-16*
141251 ..... *1-19*
141254 ..... *1-11*
141434 ..... *1-3*
1415918 ..... *1-59*, *1-61*
141594 ..... *1-75*, *1-77*, *1-79*, *1-81*, *1-83*, *1-85*
141597 ..... *1-27*, *1-99*
141808 ..... *1-15*
141826 ..... *1-75*, *1-81*, *1-83*, *1-85*
141828 *1-30*, *1-75*, *1-77*, *1-79*, *1-81*, *1-83*, *1-85*, *1-89*
141866 ..... *1-16*
141878 .... *1-30*, *1-77*, *1-79*, *1-81*, *1-83*, *1-85*, *1-89*
142803 ..... *1-94*
142806 ..... *1-94*
142807 ..... *1-94*
143066 ..... *1-16*
143916 ..... *1-3*
143994 ..... *1-92*
144002 ..... *1-8*
144003 ..... *1-5*, *1-8*
144010 ..... *1-11*
144012 ..... *1-11*
144057 ..... *1-11*
144086 ..... *1-77*
144113 ..... *1-6*, *1-7*
144138 ..... *1-6*, *1-7*, *1-75*, *1-77*, *1-85*
144193 ..... *1-99*
144341 ..... *1-13*, *1-15*
144355 ..... *1-3*, *1-15*
144356 ..... *1-5*, *1-13*
144371 ..... *1-11*, *1-13*
144372 ..... *1-15*
147552 ..... *1-15*, *1-16*
147584 ..... *1-77*, *1-89*
147743 ..... *1-92*
150076 ..... *1-3*
150273 ..... *1-89*
1-510-010003-09 ..... *1-21*
1-511-010001-05 ..... *1-6*, *1-7*
1-511-010001-07 ..... *1-26*
1-512-010005-01 *1-3*, *1-5*, *1-6*, *1-7*, *1-39*, *1-45*, *1-68*, *1-75*
1-512-010005-03 ..... *1-26*
1-512-010005-05 .. *1-3*, *1-23*, *1-26*, *1-30*, *1-33*, *1-35*, *1-37*, *1-77*
1-512-010005-09 *1-3*, *1-5*, *1-6*, *1-7*, *1-21*, *1-23*, *1-30*, *1-75*
1-512-010005-13 ... *1-6*, *1-7*, *1-11*, *1-19*, *1-21*, *1-26*, *1-33*, *1-35*, *1-37*
1-512-010005-15 ... *1-3*, *1-5*, *1-33*, *1-35*, *1-37*, *1-75*
1-512-010005-19 .. *1-3*, *1-11*, *1-13*, *1-15*, *1-19*, *1-21*

1-512-010007-03 . . . . . *1-56*
1-512-010007-05 *1-48*, *1-50*, *1-51*, *1-54*, *1-62*, *1-64*, *1-65*, *1-66*, *1-67*
1-512-010007-06 . . . . . *1-26*, *1-46*, *1-63*
1-512-010007-07 . *1-23*, *1-47*, *1-49*, *1-52*, *1-53*, *1-55*
1-512-010007-09 . . . . . *1-23*, *1-26*, *1-44*
151273 . . . . . *1-41*, *1-43*, *1-59*, *1-70*
151533 . . . . . *1-3*
1-516-010001-20 . . . . . *1-8*, *1-16*
1-516-010001-27 . . . . . *1-11*, *1-13*, *1-15*
153621 . . . . . *1-89*
153696 . . . . . *1-3*
153827 . . . . . *1-5*
153841 . . . . . *1-77*, *1-85*, *1-89*
153859 . . . . . *1-3*, *1-13*, *1-15*
154101 . . . . . *1-92*
154102 . . . . . *1-92*
154103 . . . . . *1-92*
154104 . . . . . *1-92*
154851 . . . . . *1-70*
154852 . . . . . *1-70*
154853 . . . . . *1-3*
154888 . . . . . *1-11*
154994 . . . . . *1-21*
154995 . . . . . *1-21*
154997 . . . . . *1-21*, *1-23*
154998 . . . . . *1-21*
155002 . . . . . *1-21*
155005 . . . . . *1-21*
155523 . . . . . *1-99*
155528 . . . . . *1-75*, *1-77*, *1-79*
155529 . . . . . *1-75*, *1-81*, *1-83*, *1-85*
155530 . . . . . *1-75*, *1-89*
1-557-010327 . . . . . *1-19*, *1-21*
1-557-010362-40 . . . . . *1-8*, *1-26*, *1-75*
1-557-010362-51 . . . . . *1-8*, *1-16*
1-557-010362-63 . . . . . *1-26*
155927 . . . . . *1-21*
155956 . . . . . *1-21*
155971 . . . . . *1-21*
156010 . . . . . *1-99*
157027 . . . . . *1-95*
1-573-010006 . . . . . *1-99*
161536 . . . . . *1-3*
162674 . . . . . *1-93*
1-630-010021-03 . . . . . *1-3*
164293 . . . . . *1-19*
164315 . . . . . *1-21*
1-647-010004217 . . . . . *1-63*
1-647-010004221 . . . . . *1-92*
1-647-010004240 . . . . . *1-5*, *1-11*, *1-13*, *1-15*
1-647-010004257 . . . . . *1-11*, *1-13*, *1-15*
165287 . . . . . *1-75*, *1-89*
1-654-010047-04 . . . . . *1-68*
1-654-010047-06 . . . . . *1-3*, *1-39*
1-654-010047-10 . . . . . *1-5*, *1-6*, *1-7*, *1-75*
1-654-010049-05 . . . . . *1-26*, *1-63*
1-654-010049-08 . . . . . *1-46*
1-654-010049-09 . . . . . *1-63*
1-654-010051-05 . *1-23*, *1-30*, *1-47*, *1-49*, *1-52*, *1-53*, *1-55*, *1-81*, *1-86*
1-654-010051-06 . . . . . *1-49*, *1-53*, *1-55*
1-654-010051-07 . . . . . *1-26*, *1-47*
1-654-010051-11 . . . . . *1-26*, *1-33*, *1-35*, *1-37*
1-654-010051-13 . . . . . *1-3*, *1-23*, *1-30*, *1-77*
1-654-010055-01 . . . . . *1-3*
1-654-010055-02 . . . . . *1-44*
1-654-010055-03 . . . . . *1-3*, *1-56*, *1-68*
1-654-010055-04 . . . . . *1-30*
1-654-010055-05 . . . . . *1-5*, *1-6*, *1-7*, *1-75*
1-654-010055-09 . . . . . *1-6*, *1-7*
1-654-010055-11 . . . . . *1-75*
1-654-010055-14 . . . . . *1-5*
1-654-010059-05 . . . . . *1-26*
1-654-010059-06 . . . . . *1-33*, *1-35*, *1-37*
1-654-010059-09 . . . . . *1-6*, *1-7*

1-654-010059-11 1-26
1-654-010059-14 . . . . . 1-35, 1-37
1-654-010059-16 1-21
1-654-010061-05 . . . . . 1-3, 1-5, 1-75
1-654-010065-08 1-13
1-654-010065-15 . . . . . 1-11, 1-13, 1-15
1-654-010070-02 1-21
1-654-010070-11 . . . . . 1-21, 1-26
1-654-010070-13 . . . . . 1-21, 1-23
1-654-010070-14 1-21
1-654-010125-09 1-19
166297 1-70
166298 1-70
166503 . . . . . 1-11, 1-13, 1-15
166504 . . . . . 1-11, 1-13, 1-15
166505 1-13
166506 . . . . . 1-11, 1-13
166510 1-19
166511 1-19
166529 1-19
166533 1-13
166534 1-30
166538 . . . . . 1-81, 1-83, 1-85
166544 1-75
166547 . . . . . 1-81, 1-83, 1-85
166549 . . . . . 1-81, 1-83, 1-85
166556 1-19
166565 1-19
167272 . . . . . 1-3, 1-5
167277 1-19
167281 . . . . . 1-11, 1-13, 1-15
167282 . . . . . 1-11, 1-13, 1-15
167287 1-15
167288 1-11
167289 1-26
167292 1-26
167294 1-21
167295 1-23
167296 1-17
167297 . . . . . 1-11, 1-15, 1-17
167298 1-9
167299 . . . . . 1-5, 1-9
167302 1-26
167303 1-26
167306 1-26
167307 1-26
167308 . . . . . 1-75, 1-77, 1-79, 1-92
167310 . . . . . 1-6, 1-7, 1-75, 1-77, 1-85, 1-94
167311 1-5
167312 1-11
167313 1-11
167314 1-5
167315 1-5
167316 1-7
167317 . . . . . 1-6, 1-7
167318 . . . . . 1-6, 1-7
167319 . . . . . 1-6, 1-7
167320 . . . . . 1-6, 1-7
167321 1-3
167322 . . . . . 1-3, 1-77, 1-81, 1-83
167323 1-3
167324 1-3
167325 1-75
167326 1-11
169650 1-97
169651 1-97
169958 1-30
169959 1-30
169960 1-30
169961 . . . . . 1-77, 1-85
169962 . . . . . 1-77, 1-85
169963 . . . . . 1-77, 1-79, 1-81, 1-83, 1-85, 1-89
169970 1-23
169971 1-23
169974 1-26
169975 1-26

170509 . . . . . *1-99*
170510 . . . . . *1-99*
170899 . . . . . *1-23*
170903 . . . . . *1-23*
170905 . . . . . *1-23*
170909 . . . . . *1-23*
170912 . . . . . *1-21*
170915 . . . . . *1-21*
170918 . . . . . *1-21*
170928 . . . . . *1-21*
170929 . . . . . *1-21*
170935 . . . . . *1-21*
170937 . . . . . *1-21*
170938 . . . . . *1-21*
170939 . . . . . *1-21*
170941 . . . . . *1-21*
171606 . . . . . *1-99*
171633 . . . . . *1-26*, *1-30*
171635 . . . . . *1-15*
172935 . . . . . *1-62*, *1-64*, *1-65*, *1-66*, *1-67*
172973 . . . . . *1-30*
174366 . . . . . *1-77*
174399 . . . . *1-41*, *1-43*, *1-47*, *1-49*, *1-52*, *1-53*, *1-55*
174419 *1-41*, *1-43*, *1-44*, *1-45*, *1-46*, *1-48*, *1-50*, *1-51*, *1-54*
174434 . . . . . *1-41*, *1-43*, *1-56*
174435 . . . . . *1-39*
174436 . . . . . *1-39*
174437 . . . . . *1-39*, *1-59*, *1-61*
176558 . . . . . *1-77*
176897 . . . . . *1-30*
178513 . . . . . *1-39*
178514 . . . . . *1-39*, *1-59*, *1-61*
179511 . . . . . *1-6*
179512 . . . . . *1-6*
179533 . . . . . *1-11*, *1-13*, *1-15*
179534 . . . . . *1-13*
185943 . . . . . *1-63*
185944 *1-59*, *1-61*, *1-62*, *1-63*, *1-64*, *1-65*, *1-66*, *1-67*
185946 . . . . . *1-64*, *1-66*, *1-67*
185948 . . . . . *1-65*
185950 . . . . . *1-62*
185951 . . . . . *1-64*, *1-66*, *1-67*
185975 . . . . . *1-59*, *1-61*
185976 . . . . . *1-39*, *1-59*, *1-61*
185978 . . . . . *1-46*, *1-63*
185979 . . . . . *1-59*, *1-61*, *1-68*
185982 . . . . . *1-63*
185983 . . . . . *1-59*, *1-61*
185985 . . . . . *1-50*, *1-65*
185989 . . . . . *1-62*
1-861-010005 . . . . . *1-8*
1-861-010032-02 . *1-44*, *1-45*, *1-46*, *1-48*, *1-50*, *1-51*, *1-54*
1-861-010032-03 . . . . . *1-56*
1-861-010032-06 . . . . . *1-45*, *1-48*, *1-50*, *1-68*
1-861-010032-07 . . . . . *1-3*, *1-51*, *1-54*
1-861-010032-08 . . . . . *1-46*, *1-63*
1-861-010032-11 . . *1-3*, *1-26*, *1-30*, *1-47*, *1-49*, *1-52*, *1-53*, *1-55*
1-861-010032-15 . . . . . *1-21*
1-861-010032-19 . . . . . *1-21*
1-861-010032-20 . . . . . *1-75*
1-861-010032-21 . . . . . *1-33*, *1-35*, *1-37*
1-861-010032-24 . . . . . *1-3*, *1-19*
1-861-010032-32 . . . . . *1-11*, *1-13*, *1-15*
1-861-010034-07 . . . . . *1-56*
1-861-010034-09 . *1-45*, *1-48*, *1-50*, *1-51*, *1-54*, *1-62*, *1-64*, *1-65*, *1-66*, *1-67*
1-861-010034-10 . . . . . *1-26*, *1-46*, *1-63*
1-861-010034-11 . *1-23*, *1-30*, *1-47*, *1-49*, *1-52*, *1-53*, *1-55*, *1-81*, *1-86*
1-861-010034-13 . . . . . *1-3*, *1-23*, *1-26*, *1-44*
190400035 . . . . . *1-93*
191382 . . . . . *1-37*
191383 . . . . . *1-35*
191881 . . . . . *1-35*, *1-37*

192069 . . . . . *1-99*
192971 . . . . . *1-11*
194102 . . . . . *1-71*
194103 . . . . . *1-71*
194104 . . . . . *1-71*
194105 . . . . . *1-71*
194106 . . . . . *1-71*
194107 . . . . . *1-71*
194108 . . . . . *1-71*
194109 . . . . . *1-71*
194110 . . . . . *1-71*
194111 . . . . . *1-71*
194744 . . . . . *1-71*
194745 . . . . . *1-71*
194840 . . . . . *1-70*
194841 *1-41*, *1-43*, *1-47*, *1-49*, *1-52*, *1-53*, *1-55*, *1-70*
194903 . . . . . *1-70*
194904 . . . . . *1-70*
195196 . . . . . *1-86*
195198 . . . . . *1-86*
197150 . . . . . *1-56*
198773 . . . . . *1-86*
198774 . . . . . *1-81*, *1-86*
198775 . . . . . *1-86*
1C357 *1-45*, *1-48*, *1-51*, *1-62*, *1-64*, *1-65*, *1-66*, *1-67*
1P995 . . . . . *1-30*
202702-6-6S *1-30*
202702-6-8S *1-75*, *1-77*, *1-85*
202702-8-8S *1-75*, *1-77*, *1-79*, *1-81*, *1-83*, *1-85*, *1-89*
203003-8-8S *1-81*
203005-8-8S *1-75*, *1-77*, *1-79*, *1-81*, *1-83*, *1-85*, *1-89*
204384 . . . . . *1-17*
2061-8-8S *1-81*
2062-8-8S . . *1-3*, *1-30*, *1-75*, *1-77*, *1-79*, *1-81*, *1-83*, *1-85*, *1-89*
2071-8-8S *1-30*, *1-75*, *1-81*, *1-83*, *1-85*
207619 . . . . . *1-59*, *1-61*
207620 . . . . . *1-59*, *1-61*
208527 . . . . . *1-56*, *1-68*
208528 . . . . . *1-56*, *1-68*
210606 . . . . . *1-16*
2-150-010008 . . . . . *1-5*, *1-13*, *1-15*, *1-19*
2-181-010001 . . . . . *1-3*, *1-30*, *1-77*, *1-81*, *1-83*
219155 . . . . . *1-30*, *1-99*
220000212 . . . . . *1-90*, *1-91*, *1-92*
233476 . . . . . *1-44*
233477 . . . . . *1-41*, *1-43*
233478 . . . . . *1-41*, *1-43*
233479 . . . . . *1-41*, *1-43*
233480 . . . . . *1-41*, *1-43*
233481 . . . . . *1-41*, *1-43*
233482 . . . . . *1-41*, *1-43*
233483 . . . . . *1-41*, *1-43*, *1-56*
233485 . . . . . *1-44*
233490 . . . . . *1-47*, *1-49*, *1-52*, *1-53*, *1-55*
233496 . . . . . *1-45*, *1-48*, *1-51*, *1-54*
234115 *1-44*, *1-45*, *1-46*, *1-47*, *1-48*, *1-49*, *1-50*, *1-51*, *1-52*, *1-53*, *1-54*, *1-55*
234192 . . . . . *1-48*, *1-51*, *1-54*
234193 . . . . . *1-45*
234194 . . . . . *1-46*
234195 . . . . . *1-47*, *1-49*, *1-52*, *1-53*, *1-55*
234196 . . . . . *1-51*
234197 . . . . . *1-48*
234453 . . . . . *1-39*
234484 . . . . . *1-45*
234485 . . . . . *1-48*, *1-51*
234488 . . . . . *1-50*, *1-54*
234507 . . . . . *1-99*
235621 . . . . . *1-99*
235624 . . . . . *1-99*
2-368-010287 . . . . . *1-39*
2-375-010602 . . . . . *1-3*
237780 . . . . . *1-56*
2-406-010073 . . . . . *1-8*
2-474-010022 . . . . . *1-75*, *1-89*

2-573-010198 . . . . . *1-99*
2-573-010330-03 . . . . . *1-27*, *1-30*, *1-99*
2-573-010335 . . . . . *1-99*
2-798-010106 . . . . . *1-9*
2P253 . . . . . *1-56*, *1-68*
2P793 . . . . . *1-19*
2P794 . . . . . *1-19*
2P986 . . . . . *1-21*, *1-23*
4000671 . . . . . *1-70*
4001060 . . . . . *1-8*
4001294 . . . . . *1-59*, *1-70*
415 . . . . . *1-17*
4J918 . . . . . *1-23*
4K956 . . . . . *1-41*, *1-43*, *1-44*, *1-59*, *1-61*
528933 . . . . . *1-99*
528934 . . . . . *1-99*
528938 . . . . . *1-99*
5K156 . . . . . *1-44*
5K226 . . . . . *1-44*
5K227 . . . . . *1-44*
5K262 . . . . . *1-44*, *1-45*, *1-46*, *1-48*, *1-50*, *1-51*, *1-54*
6D529 . . . . . *1-21*
6K891 . . . . . *1-33*
70239854 . . . . . *1-3*, *1-15*
70592442 . . . . . *1-3*
70593063 . . . . . *1-27*
71508954 . . . . . *1-89*
71508982 . . . . . *1-83*
71508985 . . . . . *1-77*, *1-79*
71508987 . . . . . *1-79*
71508988 . . . . . *1-3*, *1-79*
71508991 . . . . . *1-81*
71508992 . . . . . *1-81*, *1-83*, *1-85*
71509000 . . . . . *1-89*
7D642 . . . . . *1-75*
7K286 . . . . . *1-19*
7K528 . . . . . *1-33*, *1-35*
7K529 . . . . . *1-33*, *1-37*
7K533 . . . . . *1-33*, *1-35*, *1-37*
7K678 . . . . . *1-59*, *1-61*
8-102-010019 . . . . . *1-27*
8-102-010043 . . . . . *1-21*
830025 . . . . . *1-27*
8-573-010084 . . . . . *1-99*
8J309 . . . . . *1-99*
9K616 . . . . . *1-21*

T

TR416 . . . . . *1-9*

W

W933037-4 . . . . . *1-75*

Instructions for Ordering Parts

**** Repair parts must be ordered through an authorized dealer ****

BEFORE CALLING YOUR DEALER,
HAVE THE SERIAL NUMBER AND MODEL OF YOUR HITCH AND/OR INDIVIDUAL SEEDER.

DEALER INSTRUCTIONS FOR ORDERING PARTS FROM LANDOLL PARTS DISTRIBUTION CENTER

PHONE: 800-423-4320 OR 785-562-5381 **FAX:** 888-527-3909

ORDER ONLINE: Dealer.landoll.com

DATA PLATE

See Figure below for the Data Plate, which lists the model and serial number of the equipment. The 4630-36 Folding Seeder includes 4 Data Plates, (1) 4630-36 Data Plate on the left side of the Hitch, and (3) Seeder Data Plates, located on the front, right hand side of each seeder.

SERIAL NUMBER NOMENCLATURE

The Seeder Data Plates will list Model Number of the individual Seeders and the same serial number as the Hitch followed by a "L", "C", or "R" to indicate position on the machine (Left, Center or Right). The following information will help decode the Landoll serial number.

ASD2400100 = xxmyyssssss

xx	= model series (i.e. “AS” for all Agriculture Seeders)
m	= month of manufacture (ex. “D” means April. The letter I is not used.)
yy	= last digits of the year manufactured (ex. “24” means 2024)
sssss	= Sequential number used to track warranty and service information.

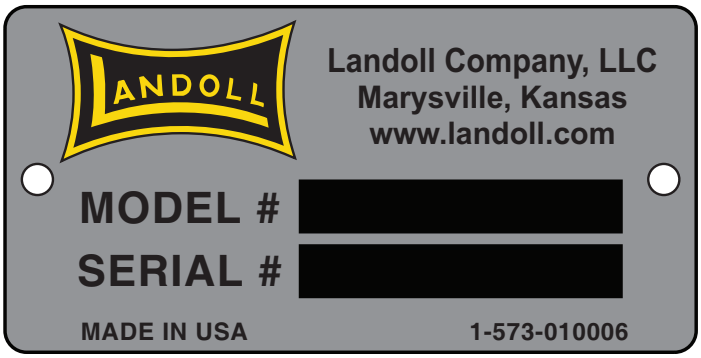

Figure: Data Plate

Manuals for 4630-36 Folding Seeder

Manual Number	Manual Type
F-640	Operator’s Manual
F-641	Parts Manual

Document Control Revision Log:

Date	Form #	Improvement(s): Description and Comments
	F-641-0513	
12/13/2013	F-641-1213	
06/01/2015	F-641-0615	
02/01/2016	F-641-0216	
02/2022	F-641-0222	ECN 46900, 47187, 47696, 47707 - Add Brillion Elite Mini Monitor by Loup ECN 47474 - Add QR Code Decals ECN 47836 - Manual Canister Changes
12/2022	F-641-1222	Update to 167308P Hydraulic Cylinder ECN 48601 - Stop Link Weldment Redesign Updated ISO logos to ISO 9001:2015 (Revised 04/2024) Updated Light Assemblies (Revised 01/2026)
11/2026	F-641-2611	ECN 52292 - Hydraulic Cylinder 2.5x20 Carlson *Revision Date (YearMonth)

Equipment from Landoll Company, LLC is built to exacting standards ensured by ISO 9001:2015 registration at all Landoll manufacturing facilities.

Model 4630-36
Folding Seeder
Parts Manual

Re-Order Part Number F-641

LANDOLL COMPANY, LLC
1900 North Street
Marysville, Kansas 66508
(785) 562-5381
800-428-5655 ~ WWW.LANDOLL.COM

Copyright 2026. Landoll Company, LLC
"All rights reserved, including the right to reproduce this material or portions thereof in any form."